Low Assembly Bench

Versatile platform puts your work at the right height

by Bill Nyberg

My father learned woodworking in Sweden, and when he came to this country, he got a job building reproduction Early American furniture. The shop had been in operation since the late 1700s, and like those who worked before him, my father was assigned a huge bench with many drawers. He stored his tools and ate his lunch at the bench, but much of his actual work took place nearby on a low table he called "the platform."

When I inherited his big bench, I also found myself doing most of my work at a low platform improvised from sawhorses and planks. I have bad shoulders and the occasional sore back, so using a full-height bench is difficult and unproductive. I needed a bench that suited the way I really work, so I built a low platform that incorporates some features of a traditional full-sized bench.

A clamping machine

My low platform bench is made for clamping (see the photos on the facing page). The edges overhang enough for clamps to get a good grip anywhere along the length of the bench. A 4-in.-wide space down the middle increases the clamping options.

This platform bench has four tail vises made from Pony No. 53 double-pipe clamps, which can be used by themselves or in combination with a row of dogs on the centerline between the screws, as the drawing shows. Unlike most bench arrangements, with a single row of dogs along one edge, this one doesn't twist or buckle the piece. I can use each vise singly or with the others because the pipes are pinned into the benchtops at each end with ¼-in. by 2-in. roll pins. Without the pins, the pipes would slide through the bench when tightening one end.

Rather than using traditional square bench dogs, I bored ¾-in. holes for a variety of manufactured dog fixtures or shopmade dowel dogs (see the drawing).

Building the benchtops

The bench is made from eight straight, clear 8-ft. 2x4s that I had kept in the shop for a few months to dry. I jointed the edges and then ran each of the boards through the planer until the radiused corners were square.

Building the legs and base according to the dimensions on the drawing is straightforward. The only point to note is the dovetail connecting the beams to the legs. Because of the orientation of the beams and legs, the dovetail is only 1½ in. at its widest point, but it's 3½ in. from top to bottom. I tilted the tablesaw blade to cut the tails on the beam and cut the pins on the legs in the bandsaw. Almost any method would work to join the beam to the leg; my first version of the bench used a bolted slip joint.

The pipes run through the tops—The tops are made in two sections and glued up with the pipes and vises in place. The upper sections are made of three boards and the lower section from two. I edge-glued them with alternating growth rings to eliminate cupping. I cut ⅞-in. grooves lengthwise in the top face of the bottom section to accommodate the pipes.

The tops are held to each beam with a single lag screw, which allows seasonal movement. To lock the tops into the base, I cut dadoes on the lower faces of the bottom sections to fit over the beams.

Assembling the double-pipe clamps—The double-pipe clamps are sold with a

A low bench made for clamping
This bench is 24 in. high, a convenient height for working on many projects. The benchtops are 42½ in. long, which gives more than 4 ft. between the jaws. At about 70 lbs., the bench is light enough to move around yet heavy enough for stability.

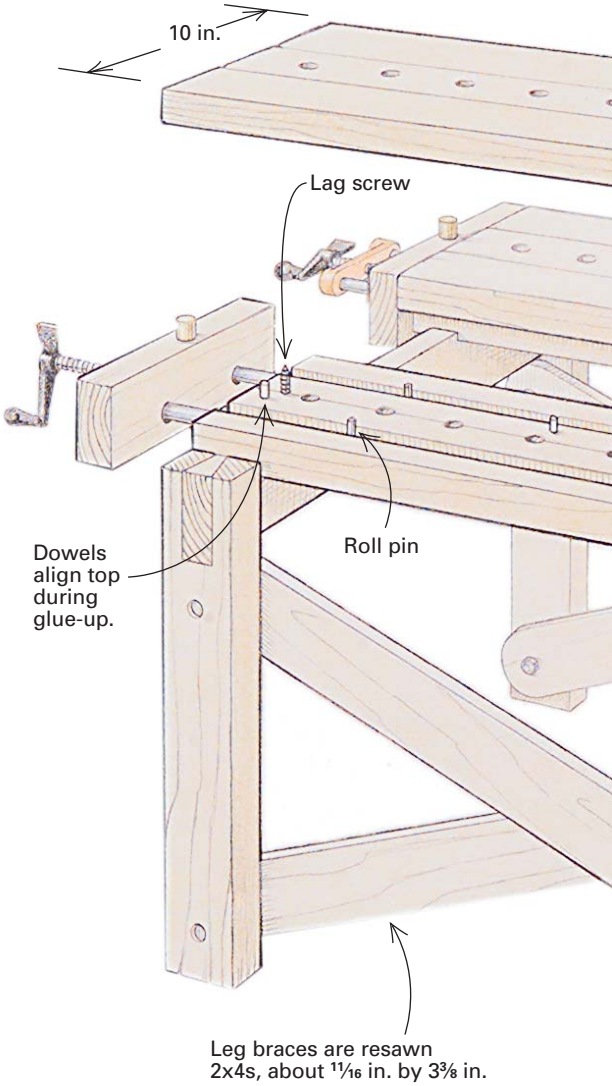

Photos: Aimé Fraser; drawings: Heather Lambert

tail stop and a screw head. I set aside the tail-stop ends and used only the screw heads. Threading on the vise at one end of the pipe will unscrew the vise at the other end. So I had a plumber cut the threads twice as long on one end of each of the four pipes. I threaded the first vise all the way onto the end with double-long threads so that it was twice as far on the pipe as it needed to go. By the time the second vise was in place, the first one had unscrewed itself to the correct location.

Keep ends flush when gluing—Before the pipes are installed in the grooves, I cut all the bench pieces to length. Once the tops are glued up, the pipes and vises are in the way, so it's hard to trim up ends that aren't flush. For flush ends, I aligned the pieces with dowel pins between top and bottom. I applied the glue and clamped the top and bottom sections together with the dowels in place. After the glue was dry, I drilled for the roll pins from the bottom so they wouldn't show. □

Bill Nyberg is director of ophthalmic photography at the University of Pennsylvania in Philadelphia. He works wood in his spare time.

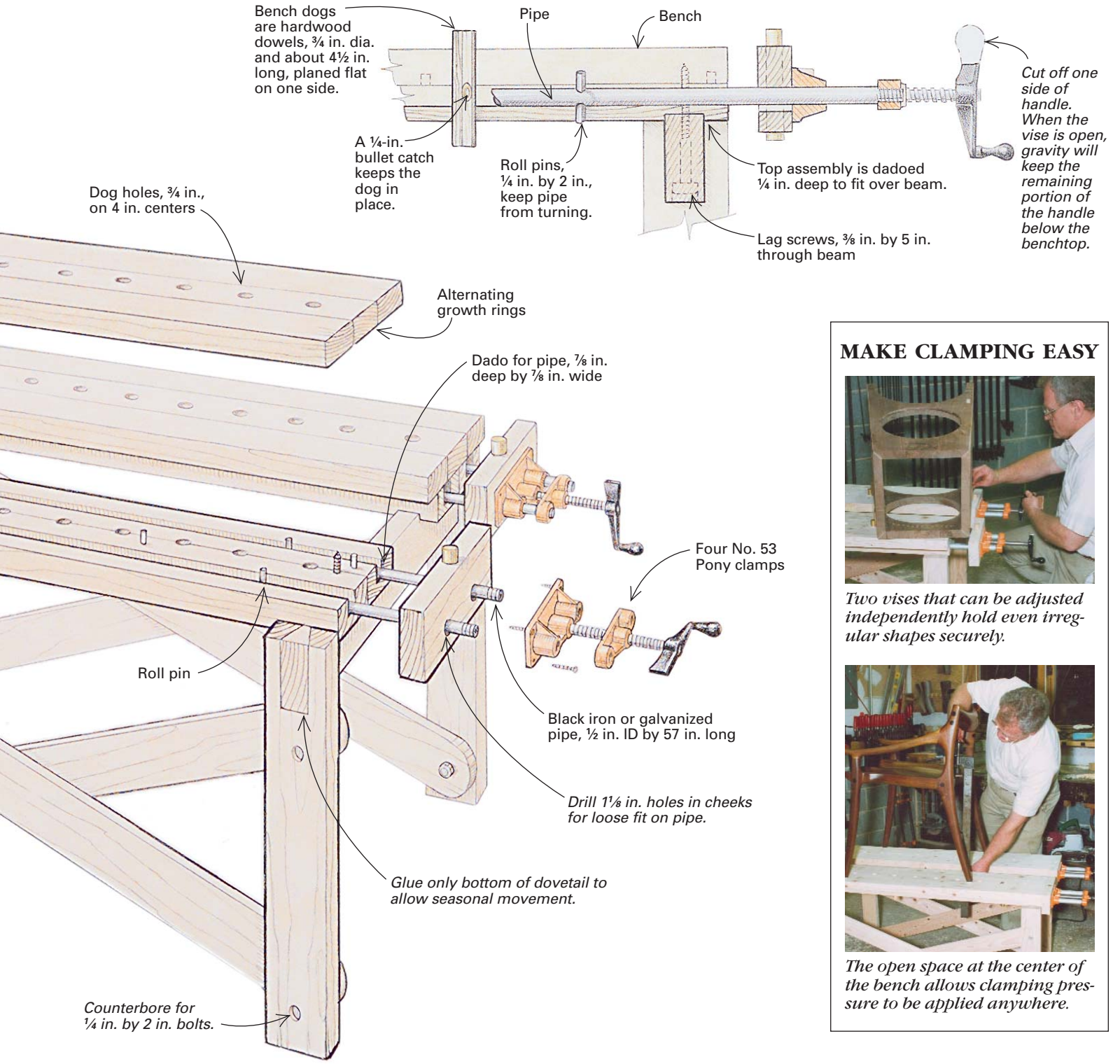

MAKE CLAMPING EASY

Two vises that can be adjusted independently hold even irregular shapes securely.

The open space at the center of the bench allows clamping pressure to be applied anywhere.