Antiqued Pine Furniture

Distressing won't hide sloppy work

by B. D. Bittinger

"Probably it is the spirit of frank simplicity that gives this work (pine furniture) its fundamental appeal. It is on friendly terms with open fires, with wrought-iron hinges, with hewn beams and cornerposts. . . But 'ware lest you introduce a piece of mahogany to such company! The mahogany raises its eyebrows at favorite scratches and rounded edges of the pine, while the pine peeks out of the corners of its eyes at the painstaking satinwood inlay and wonders what it is all about."

The Pine Furniture of Early New England
Russell H. Kettell, 1929

Antiqued pine furniture has become increasingly popular in recent years. This style of furniture is characterized by thick (1-in. to 1-1/2-inch) table and case tops, and correspondingly sturdy carcase construction. It is constructed from knotty white pine. The antiqued and distressed finish is medium dark brown, with lighter brown highlights.

The line of commercial antiqued pine furniture marketed under the Ethan Allen trademark is a good example of this furniture style. I view the style as a romanticized version of the pine furniture built by skilled joiners in rural America during the last half of the 18th century—not rustic or common, but well-made country pine furniture.

Antiqued pine furniture designs for use in present-day homes are necessarily adaptations, not authentic reproductions. After all, rural colonial families did not have king-size beds with "sleep sets" or stereo and TV cabinets. Free-standing desks were rare and all-drawer chests with large, plate-glass mirrors were unknown. They had as much use for coffee tables and bookcases as we have for dough boxes and flax wheels. Antiqued pine furniture designs are based more on feeling than on fact.

Eastern white pine was used by early cabinetmakers and knotty eastern white pine can still be found. Western white pine serves as well and is available at most lumberyards. There

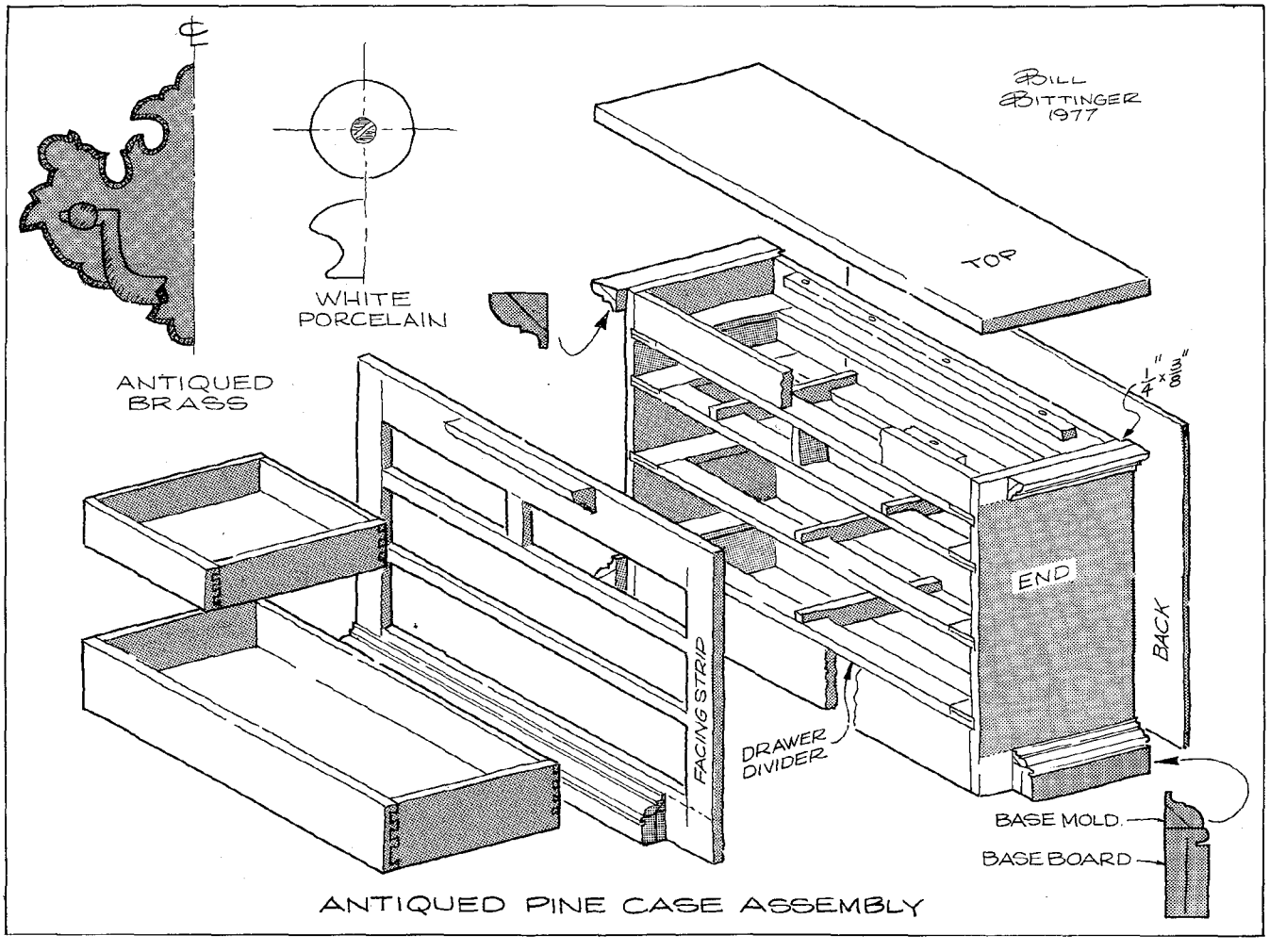

ANTIQUED PINE CASE ASSEMBLY

are several varieties of western pine, ranging in color from almost white to tan to pink. Kiln-dried knotty white pine is generally available as #3 common 1x12 shelving in lengths of up to 16 ft. Sugar pine is my choice when I can get it. It is usually tan in color with rust grain lines. Some boards also have a distinctive brown fleck marking. The knots are generally small and red-brown in color.

Most furniture parts are less than 4 ft. long and 5 in. wide. In selecting material, I look at a 1x12 shelving board in terms of the number of good pieces it may contain, not its overall appearance. Some white pine boards are full of sap, heavy and sticky, and are useless for making furniture. Thick (4/4, 6/4, 8/4) knotty white pine is not available at most lumberyards so I usually order from a dealer such as Educational Lumber Co. in Asheville, N.C.

White pine is weak compared to most cabinet woods and this must be considered when designing joints. Tenons in pine, for example, should be as large as possible and somewhat longer than they would be in hardwood. Chair turnings should be hardwood, but heavy pine seats and arms may be used in combination with the hardwood. Pine turnings for table legs should be heavy with simple, bold patterns. I prefer to glue up turning blocks from 3/4-in. stock. Small, firm knots in a turning block will usually cut and finish well.

Tools must be extremely sharp for cutting pine because it is so soft that the fibers tend to tear. I use a plywood-tooth saw blade on the radial arm saw and always crosscut with the good side up. Even with a sharp, small-tooth blade the fibers may break out on the bottom and leave a rough surface. Carving chisels must also be extra sharp.

Let me emphasize that workmanship must be of the highest quality. Antiquing and distressing will not cover or hide sloppy or careless work. Quite the opposite, antiquing will emphasize poor joints, hammer marks, clamp marks, and other evidence of careless workmanship.

Carcase construction

A carcase for a large chest of drawers includes most of the particular problems of working with white pine. The large drawing shows the basic construction of such a case. What follows are the working methods and finishing techniques I have developed for achieving the style I like.

Carcase end pieces (using 3/4-in. stock) may be solid edge-glued pine or frame-and-panel assemblies. Doweling or shaper-edge joining is not necessary with Titebond glue. It is important, however, to align the boards in the clamps, thus minimizing planing and sanding the finished panel. Wide shelving (12 in. or more) should be ripped into at least two strips and the grain alternated before gluing, to reduce cupping. Excess glue squeezed out of the joints should be removed at once with a wet cloth. Glue will seal the wood and cause light spots when the stain is applied.

If solid ends are used, special consideration must be given in assembly to avoid restraining the boards across their width, else the case will be damaged by shrinkage or expansion.

Raised-panel case ends are visually pleasing and solve the problems of expansion and contraction. Although a frame made from 3/4-in. stock with a 1/2-in. thick panel is light in weight and relatively weak, it is satisfactory for this application because it will be amply reinforced by the back drawer dividers and facings. The frame is assembled with mortise and tenon joints and the panel is retained in grooves in the stiles and muntins. The front edge stile should be 3/4 in. narrower than the back stile so that after the facing is applied the stiles will be the same width.

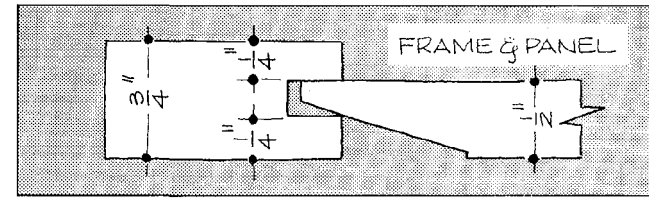

After the end panels (frame-and-panel or solid) are cut to size, a series of 3/4-in. wide by 1/4-in. deep dadoes is laid out and cut to house the drawer dividers. Remember to cut a rabbet 3/8 in. wide by 1/4 in. deep on the back edges of the carcase sides to accommodate the back panel of the case.

Drawer divider units are made from 3/4-in. pine joined with mortise and tenon or half-lap joints. The width of the divider strips will vary according to the overall dimensions of the case. The strips at the ends of the divider frames, which run from front to back, should be about 1-1/2 in. wider than the vertical facing strips of the front frame, so that they can support and act as a bearing surface for the drawer sides.

The carcase is assembled with glue—on the front edge only of solid end pieces—and plug-covered, flat-head wood screws through the end panels. Plugs may be surface-cut round plugs, end-grain round plugs or square patch plugs. Finishing nails, set below the surface, may also be used for case assembly. After setting the nail I use a modified nail set with a square tip (about 1/8 in. by 1/8 in.) to make a square set hole. The small round or square holes will blend with the overall distressed appearance. The facings and back panel will be glued and fastened to the edges of the end panels and to the drawer dividers, to provide adequate strength whether the case is assembled with nails or screws.

The front facing frames may be assembled as a unit with dowels, mortise and tenon joints or half-lap dovetails and then fastened to the carcase; or each strip may be individually attached with butt joints. I prefer the latter. In either case, the facing is fastened with glue and plug-covered screws or finishing nails. If nails are used, they should be located at random on the facing boards to avoid a regular pattern. Plugged screws, however, should be placed in a symmetrical pattern. Whether or not the facings were preassembled with mortise and tenon joints, 1/4-in. dowels may be set into the surface to simulate draw-bore locking pins.

I usually make the base boards about 1-1/2 in. thick to balance the thick top overhang. They may be scroll cut or left full width. The base is assembled with mitered corners and is glued and fastened to trie carcase. On some pieces, such as dower chests, the base boards may look better if they are joined with through dovetails. The base mold is a modified stock molding.

The bottom dust panel and back (lauan plywood) should not be attached until the drawer slides are installed and each drawer is accurately fitted to its opening.

Case tops vary in thickness from 7/8 in. to 1-1/2 in.,

Bill Bittinger, 48, has been a woodworker for 20 years. Trained as an engineer, he is production superintendent at a tire cord factory. He lives in Shelbyville, Tenn.

depending 00 the scale of the piece and the width of the carcase facing strips. Tops are made from solid edge-glued pine. I use dowels on edge-glued thick pine to help level the pieces in the clamps. If bread-board strips are not used, the end grain of the top should be carefully sanded or it will soak up extra stain. Case tops are attached with screws from underside in oversize holes in the top mounting strips.

Bread-board strips across each end of the top add to the appearance and strength of projects such as coffee tables and heavy trestle tables. Before joining the strips, I run either a 1/8-in. by 1/8-in. rabbet across the ends of the top or a quirk mold on the joining edge of the strip. Narrow strips may be attached with screws through oversize holes, to allow for expansion. The counterbored screw holes are covered with round or square plugs. The edging strip should be glued only at the center on a tabletop, or at the front edge on a case top. To attach unsupported strips to tabletops that are subjected to heavy loads, I use 2-in. wide stopped splines made of 1/2-in. plywood and two or more concealed tie bolts cut from 1/4-in. threaded rod. The spline is glued only at the center, to equalize misalignment caused by shrinkage or expansion of the top.

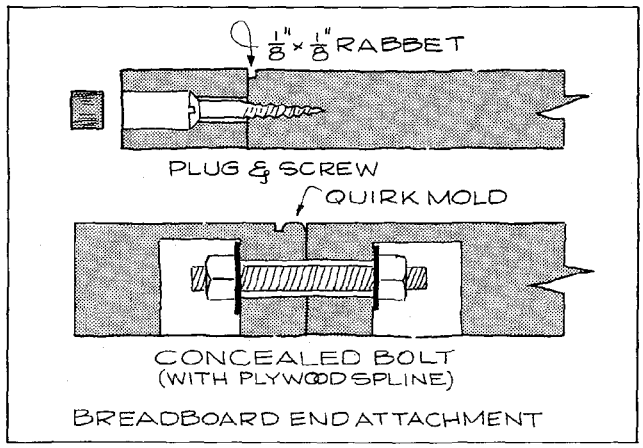

Drawers

I don't think pine drawers should be lipped because a thin lip is fragile and a heavy lip is clumsy. I install drawers and doors with 1/8 in. of the edge exposed. When they are rounded by sanding, the chest has a soft—not flat—appearance.

Cut the 3/4-in. drawer fronts for a snug press fit in the openings, and index-mark each front to its corresponding opening. Knots should be at least 1 in. from each end.

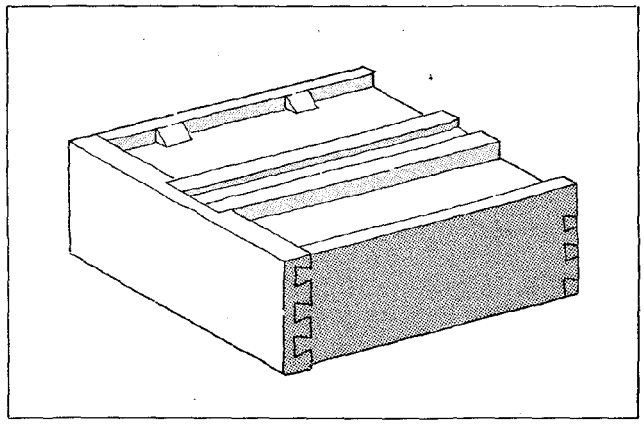

Cut the sides about 1/8 in. narrower than the front and about 2 in. shorter than the case depth. Drawer sides should be about 5/8 in. thick. Cut 1/4-in. by 3/8-in. bottom retaining grooves in the sides and front, and cut a mortise on the bottom edge of the back side of the front for the drawer slide part.

Dovetail joints should be cut by hand. It is difficult to obtain sharp clear lines in soft pine with an ordinary marking gauge. I use a sharp 3H pencil with a shop-made marking gauge to lay out the dovetails. Dimension A is usually about

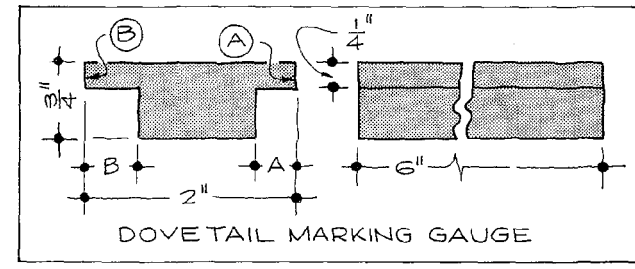

two-thirds the thickness of the drawer front and dimension B is 1/32 in. greater than the thickness of the side pieces. Side A is used as a marking gauge on the end of the front and on the matching side piece, to provide cutting lines for the length of the dovetails. Side B is used to mark the dovetail depth line (side thickness plus 1/32 in.) on the inside end of the front piece.

I use another shop-made marking jig to lay out the half-blind dovetail on each drawer front end. The marker is used to draw the pins and the vertical-cut guide lines on the inside of the front.

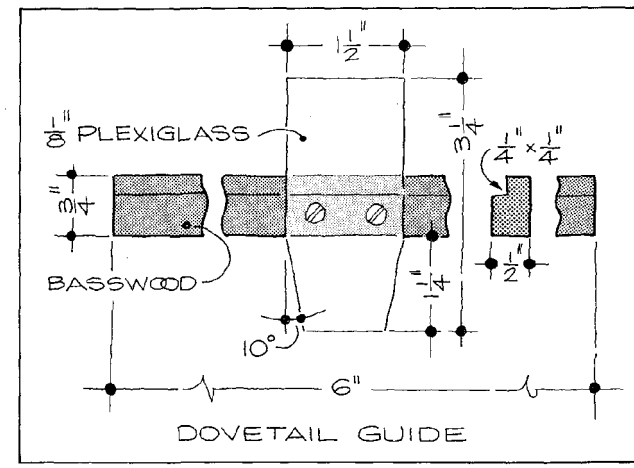

I start marking with a half-pin on each end, so that a tail will cover the bottom retaining groove in the side, and then fill in between by eye. Each end of the drawer front has the same number of pins and sockets but they are not all identical in size or spacing. Pins in pine should be only slightly smaller than the dovetail sockets. After sawing on the waste side of each pin line, I clamp the front to the bench to remove the waste with a very sharp chisel to within 1/16 in. of the guide lines. I trim the pins and the sockets to exact size with the front held vertically in a vise. Then I lay the side piece on the table saw and stand the front piece on top of it, using the saw fence to hold the front piece vertical. With the ends of the two pieces exactly aligned, I can use a sharp pencil to trace the

pin outlines onto the side piece. I cut the tails to size on the band saw. There should be enough interference in the joint to require moderate pressure to assemble. I do not dry-fit dovetail joints because this compresses the pine and causes a weaker joint. The dovetails are assembled with glue.

The back piece is joined to the drawer sides with through dovetails. The bottom (lauan or pine plywood) is nailed to the lower edge of the back part with coated box nails. The drawer slide is attached with brads and glue. Beveled glue blocks keep the bottom from rattling.

When the glue in the assembled drawer joints has set, I sand the protruding ends of the front with a belt sander. This sanding, if carefully done, will leave about I/32-in. clearance at both sides when the drawer is installed.

Install slides in the case and adjust them to center the drawer fronts in their openings. Sand to round off the top edge of the drawer front, to provide about I/32-in clearance. A gap of up to 1/16 in. around the drawer is acceptable. Attach the 1/4-in. plywood back panel with glue and small coated box nails to the drawer frame edges and all around the case edges for maximum strength.

Doors

Raised panel doors are included in some case designs such as a hutch base. Doors may be made from 1-in. or 3/4-in. pine stock. But conventional frame construction for a raised panel door of 3/4-in. pine is structurally weak, and the door does not feel comfortably heavy. To avoid weakness and add weight, I set the panel in a rabbet instead of a groove and add a back plate of plywood. First, I assemble the frames (rails, stiles and muntins) with dowels and glue. Then I rout a rabbet 3/8 in. deep by 1/2 in. wide on the inside back edges of the frame, squaring up the rabbet corners with a chisel. Then I cut the panels from 3/4-in. solid pine, allowing 1/8 in. for clearance on all four sides. I "raise" the panels by cutting a bevel all around the front face, so that when the panel is laid into the frame it will protrude by the merest 1/64 in. at the back. Finally I glue a piece of 3/16-in., 1/4-in. or 5/16-in. pine or lauan plywood to the back of the frame only, thereby pressing the panel into the rabbet and completely covering the door.

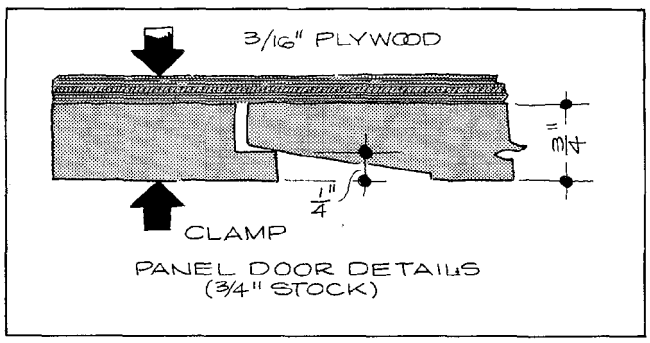

PANEL DOOR DETAILS
(3/4" STOCK)

Moldings

One of the advantages of working with pine lumber is the wide range of commercial moldings. Before mitering and applying commercial flat molding, I glue a pine backing strip to the molding and then resaw to provide a larger glue surface. This is particularly important when attaching large cornice molding around the top of a cabinet. Resawing to 45° also helps in cutting miters on large moldings.

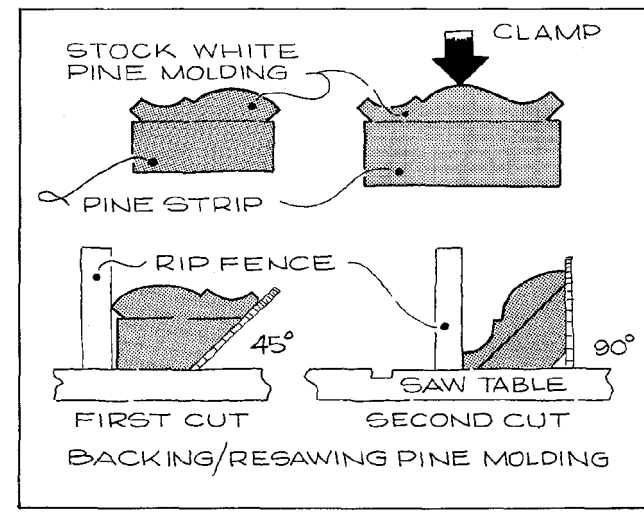

BACKING/RESAWING PINE MOLDING

Large crown molding may be assembled from several parts. The three-part composite molding shown below is made up from: 1) shop-made dentil backup piece, 2) modified commercial flat-crown molding, and 3) a nose-molded pine strip. The dentil backup piece is machined to leave a 1/4-in. to 3/16-in. raised strip. The dentil is laid out and cut after the backup strip is beveled to fit the cabinet. The "teeth" should be laid out from the center to ensure symmetry, taking care to locate one full tooth on each side of the bevel joint. The pieces of crown molding and the pine strips are mitered and installed in turn over the backup strip.

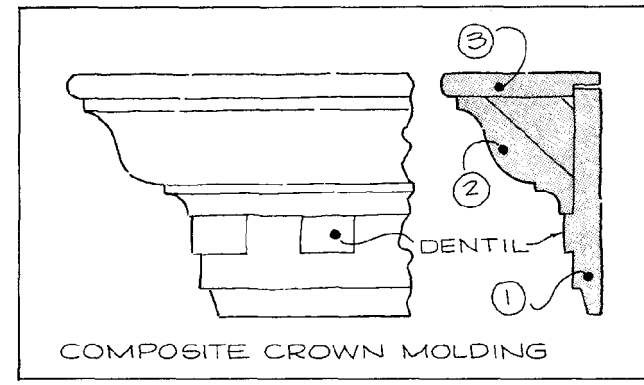

COMPOSITE CROWN MOLDING

Some projects are enhanced by a closed dentil molding (a row of square depressions) along the top horizontal facing strip. This decoration is particularly effective in bedroom sets where it can be incorporated in chests, mirror frames, bedside tables, headboards and footboards.

To make the closed dental facing strip, cut the facing about 1/2 in. wider and longer than finished size. Rip out a strip from the facing board where the molding is to be located. Start the dado layout in the center of the strip to ensure symmetry, and plan the cuts so that a raised tooth, at least full width, will remain on the end of the strip at the facing joint. Cut and sand the dados, joint the glue edges and edge-glue the strip back in place.

Distressing

The piece should not be distressed until after complete assembly and coarse sanding. Experimentation is the only way to determine the amount of distressing that will suit your taste. The procedure includes surface marking and removal of

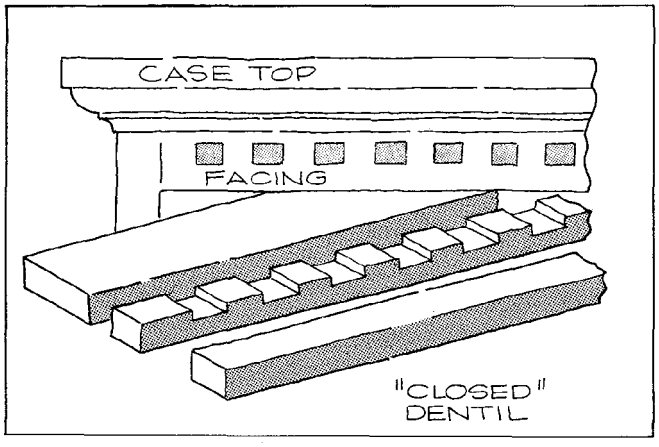

material to create a worn appearance, and special finishing to make the marks look authentic.

I do not like excessive surface marking. I usually make a few dents with the corner of a hammer claw and a few randomly spaced holes with an awl. The claw indentations are triangular and the awl holes appear as small black dots when the finishing glaze is applied. Distress marks are always randomly spaced and are more numerous around the bottom and on the top of a piece than on vertical surfaces. A tall bookcase, for example, would have very few indented distress marks above the height of 4 ft.

Wear distressing should correspond to the imagined, as well as the actual, use of the piece. Stretchers and legs that are rubbed with shoe soles should be much more severely worn than areas touched by other parts of the body. Wear distressing may be done with planes, coarse sandpaper or even rasps and files. In any case, the worn surfaces should be carefully sanded so that no tool marks remain.

After the piece is distressed, I sand with a high-speed orbital sander using 100-grit, 120-grit and 150-grit garnet paper. I complete the sanding by hand with 180-grit garnet paper wrapped around a felt pad. If scratches or other unplanned surface defects show up at this stage, they should be removed by going back to a coarser grit paper. Distressing does not camouflage sloppy and clumsy work or incomplete finish sanding.

Finishing

I use Minwax Early American oil stain to antique pine furniture. Apply the first stain coat to all surfaces, inside and outside, following the manufacturer's directions. After 24 hours, apply a second coat to the outside surfaces. This leaves drawer and case interiors lighter in color than the exposed surfaces. At this point in the finishing schedule your beautiful piece of furniture will look very disappointing—dull and splotchy—but do not despair.

I spray McCloskey Eggshell or semigloss Heirloom Finish for the seal coat and the final varnish coat. Glaze solvents do not soften it and it has good rubbing (sanding) qualities. It can also be brushed on.

After the seal coat is dry (depending on the climate, this may take up to a week) sand all surfaces with wet/dry #320 paper. When the varnish is properly dry, sanding will form a white powder on the surface.

There are a number of antiquing glazes on the market and James M. O'Neill, in his book *Early American Furniture,* gives a formula for mixing an antiquing glaze. I use Tone 'n

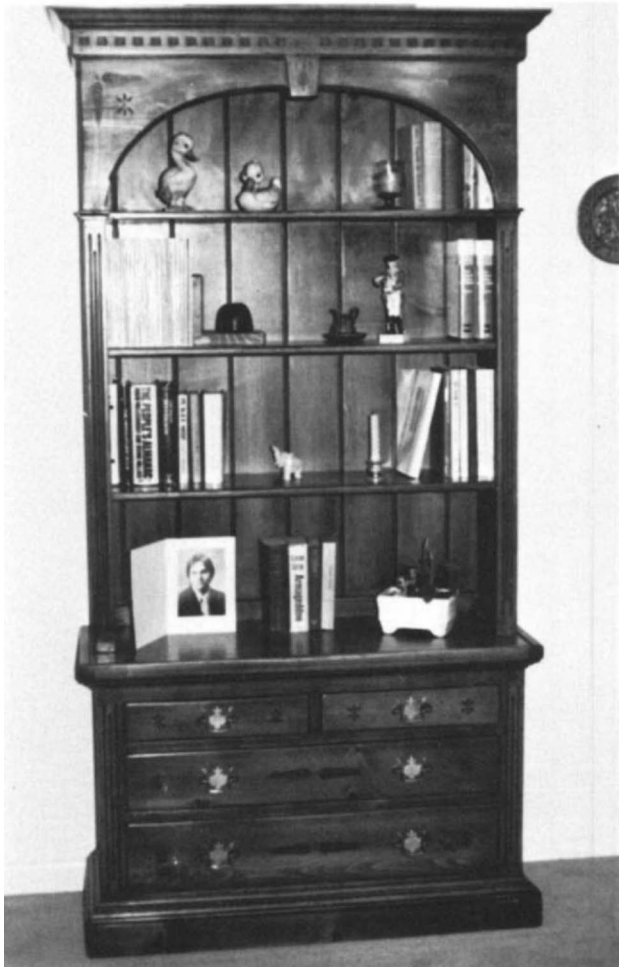

Tall chest: Designs are based on feeling more than on fact.

Tique deeptone antiquing glaze, made by C.H. Tripp Co. But I suggest you make up sample blocks to determine your preference. Rub or brush the glaze on the outside surfaces of the project and take care to fill all the distress marks with glaze. Wipe off when the glaze begins to appear dull. The glaze changes the color of the finish even though most of it is wiped off. Leave a film but not streaks. Wipe in the corners and at surface intersections with a wadded cloth so that some of the glaze remains. If too much glaze is wiped off, you can recoat and start over. At this point the finish on your project will look very good and it will improve with the final steps.

After the glaze has dried for 24 hours apply the second coat of varnish. Allow several days for drying and rub again with used #320 emery cloth and 2-0 steel wool. The final step is to coat the entire piece with a good grade of paste wax. The wax should fill any nail set holes. Rub and polish.

If you want an antiqued painted finish, substitute the paint of your choice for the stain and first coat of varnish and proceed as described above. I like the clean, bright appearance of painted interiors on pieces such as hutch bases and dry sinks. Light blue paint goes well with the antiqued finish.

I usually use antiqued brass drop bail or white porcelain pulls and mortised antiqued brass hinges. Black-finished H or L hinges and hardware are also suitable for some pieces.

These comments on design, construction and finishing also apply to small decorative pine projects such as spice cabinets, letter boxes, spoon racks, stools and picture frames.