# Build a Better Crosscut Sled

## Get accuracy, durability, and zero-clearance blade slots that refresh in seconds

BY CHANCE COALTER

Soon after I began teaching woodworking at Palomar College in southern California, I knew we needed a more reliable method for clean, accurate crosscuts. Our miter gauges and beat-up crosscut sleds just weren't cutting it.

I considered the traditional crosscut sled design and thought we could do better. Standard sleds start out with a clean slot in the base and fence, which fits perfectly around the blade that cut it, preventing splintery blowout on the back and bottom edges of cuts. The zero-clearance blade slot also shows you exactly where the blade will cut, making it easy to hit your pencil mark perfectly. But that clean kerf doesn't last long. The moment you change the blade, angle it, or worse yet, use a stack of dado blades, the slot gets blown out—and its zero-clearance benefits along with it.

Rethinking the traditional sled, I designed a two-layered base with sliding top panels that let you refresh the zero-clearance kerf around any blade or any stack of blades, angled or square. In the front fence, a replaceable insert plate serves the same purpose.

While I was at it, I addressed the other common problems with traditional sleds, such as sloppy runners and bowed fences. After six years of heavy use, the six sleds I made are just as accurate and effective as the day I built them.

### G10 vs. phenolic plywood for the base

I used a lesser-known sheet material, a fiberglass-resin composite called G10, for the structural base of my sleds. The fiberglass layers in G10 create an incredibly strong, stable, flat panel, allowing me to make the base just ⅜ in. thick. It slides beautifully too. However, at $250 for a 3-ft. by 4-ft. sheet—the smallest available size that would work—G10 is very expensive. It also beats up standard woodworking blades and bits. While it made sense for our college woodworking shop, it's probably overkill for a home shop.

A reasonable alternative for the base is phenolic plywood, which delivers the strength and durability you'll need and is both affordable and widely available ($43 at woodcraft.com for the 24-in. by 32-in. piece I used here). The surfaces of this specialty plywood are infused with phenolic resin, which makes it slide beautifully and protects the interior from changes in humidity, making the

**Zero-clearance in a jiffy**

Refreshing the zero-clearance blade slots takes a minute or two for any new setup. Just push the sliding panels inward against the blade(s), replace the fence insert if necessary, and make a cut.

Photos: Asa Christiana

## High performance for decades

This sled is built to deliver clean, accurate cuts with minimal setup for many years to come.

## Perfect results

Expect dadoes, miters, and crosscuts with unmatched accuracy and crisp edges. Make a stack of fence inserts ahead of time, and save the used ones for common cuts.

## START WITH THE BASE

**The base is built in halves. First the miter bars are attached to each panel, then the fences are attached. Cut the halves to size, and then drill the holes needed for attaching the fences and sliding panels.**

***Drill press ensures accuracy.*** *The base panel needs clearance holes and counterbores along its front and back edge, for attaching the fences. During layout, extend the lines a little past the edges of the holes, to help you transfer these locations to the fence later on.*

*The base gets threaded inserts for the sliding panels. To install these squarely and accurately, cut off the head of a machine screw, lock two nuts on it, and chuck it in the drill press. Turn the chuck by hand as you apply downward pressure with the crank.*


panel more stable than standard plywood of the same thickness. It's not G10 though, so I bumped up the thickness of the base to ½ in. Add the sliding ⅜-in.-thick MDF panels on top, and you still aren't stealing too much from the height capacity of your saw.

### A quick tour of your next sled

The design starts with the two-layered base. The sliding MDF panels are held down with screws that pass into threaded inserts in the base, ensuring a durable hold. Down the road, after you've repositioned the sacrificial panels a number of times, and made them too narrow, it's quick and easy to remake them, and the fixed, structural base of the sled never changes.

To allow the blade slot in the front fence to be renewed just as easily, there's a ⅜-in. MDF plate set into it. This fence insert is attached with screws and threaded inserts. In fact, at every attachment point, from the fences to the insert to the sliding panels, I used machine screws and threaded inserts. Standard wood screws strip when tightened and retightened; threaded inserts will give a lifetime of service.

## ATTACH THE MITER BARS

**Start by installing your widest dado stack. The goal is to give the base panels a little clearance on each side of the blades as you position them square to the saw table.**

***Measure for the miter-bar position.*** *Place one of the base halves roughly 1/16 in. from the outside of the dado set, and square to the saw table. Then measure to the center of the miter slot and mark the base at that dimension.*

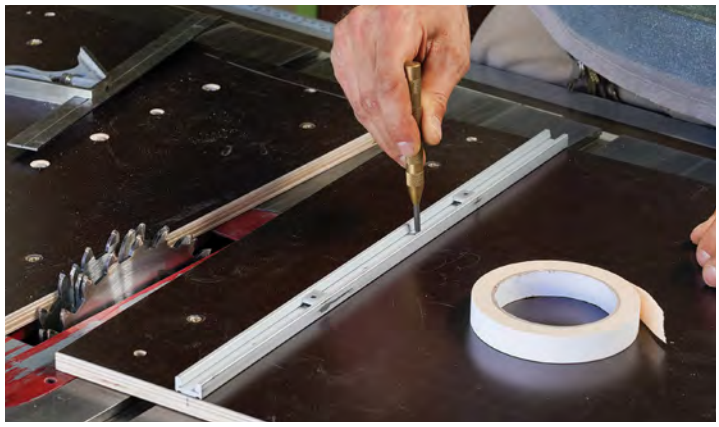

***Transfer the holes from bar to base.*** *Extend the layout line along the bottom of the panel, center a miter bar on the line—holding it there with double-sided tape—and use a drill bit or center punch to transfer the hole locations accurately. Then drill clearance holes for the four miter-bar screws, and two access holes for adjusting the fit of the bar from above.*

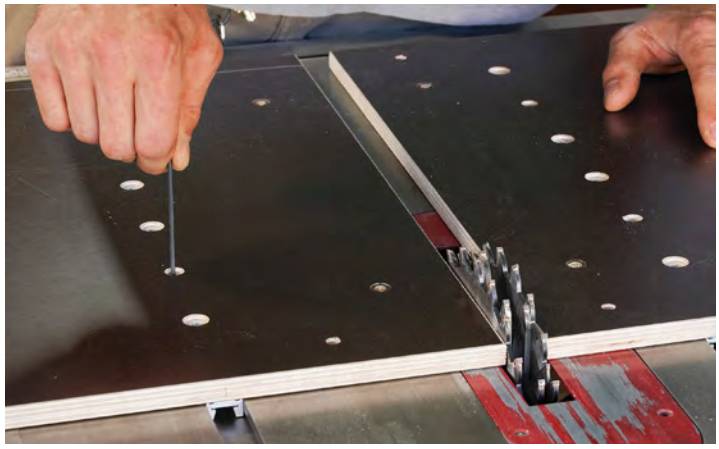

***Adjust the miter-bar fit.*** *The Incra miter bars let you adjust their fit for smooth sliding action with no slop.*

# Anatomy of a smart sled

**With a phenolic-plywood base, thick fences, aluminum miter bars, and threaded inserts at all attachment points, this sled is built to last.**

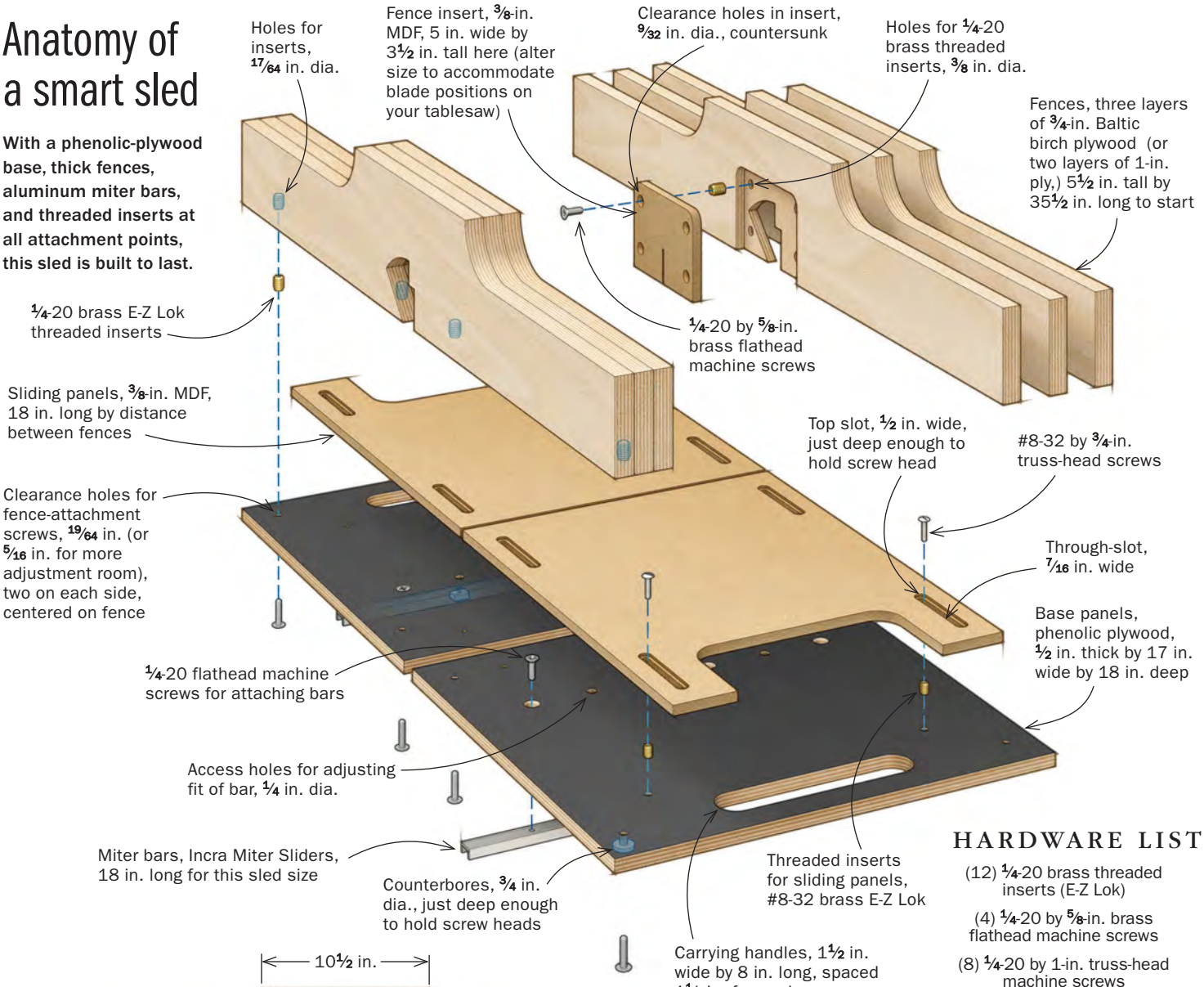


## HARDWARE LIST

- (12) ¼-20 brass threaded inserts (E-Z Lok)
- (4) ¼-20 by 5/8-in. brass flathead machine screws
- (8) ¼-20 by 1-in. truss-head machine screws
- (8) 8-32 brass threaded inserts (E-Z Lok)
- (8) 8-32 by ¾-in. truss-head machine screws
- (2) Incra Miter Sliders, 18 in. long
- (8) 10-24 by ¾-in. flathead machine screws

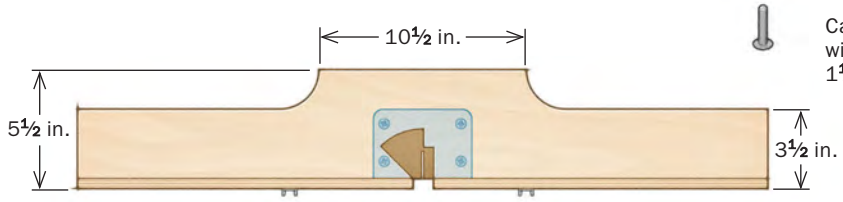


**SLED BASE FRONT VIEW**

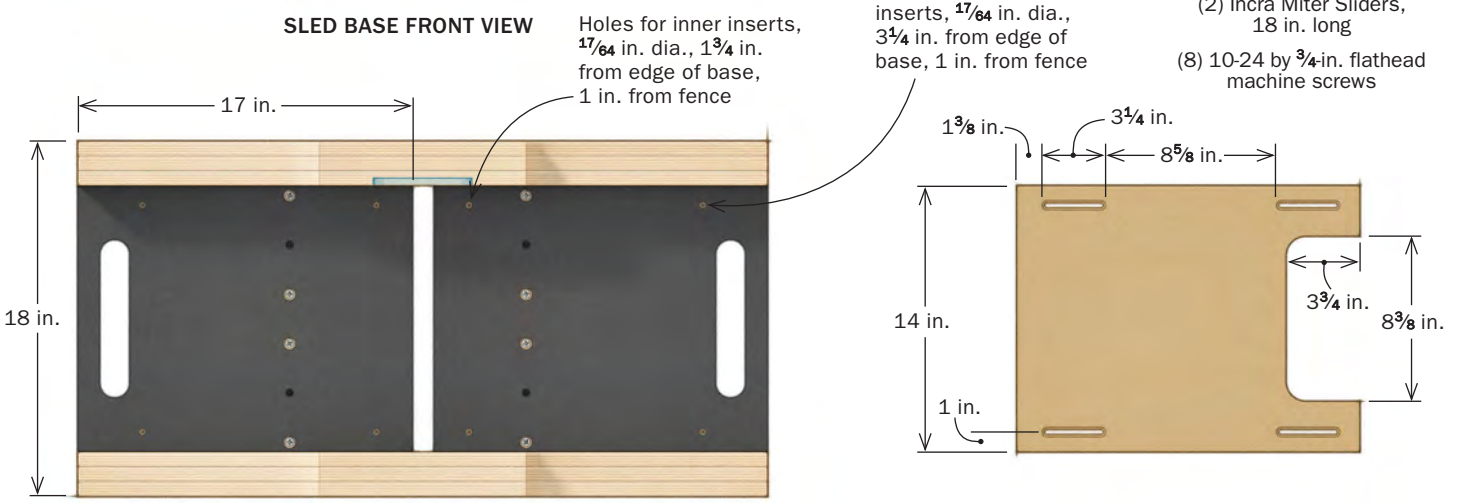


**SLED BASE TOP VIEW**

**SLIDING PANEL TOP VIEW**

Drawings: Christopher Mills

## BUILD THE FENCES

**To keep them straight and stable, the fences are made from multiple layers of plywood. Coalter prefers two layers of 1-in. Baltic-birch plywood for each fence, but three layers of ¾-in. material also works.**

***Both fences in a single stack.*** *Place all of the layers for the two fences in one stack, with an extra layer on each side to spread the clamping pressure. For best results, reverse any bowed pieces against each other, and use an adhesive that contains no water, like polyurethane or epoxy.*

***Trim the edges.*** *After scraping off the squeeze-out, trim the sides of each fence flush and square on the tablesaw.*

**Flat, accurate fences—**A pain point on typical crosscut sleds is fine-tuning the fences for accuracy. I attach the fences here with truss-head screws through slightly oversize holes in the base, making it easy to dial in the fence positions and make them permanent. Most cuts are made with the work against the trailing fence, but setups and cuts are more effective using the leading fence, so I adjust both square to the blade. For stability, I made the fences from multiple layers of Baltic-birch plywood. The best option is two layers of 1-in.-thick material, which will allow you to offset any bow in the pieces. But three ¾-in. layers will also work.

**The cure for worn runners—**Worn wooden runners introduce inaccuracy. So I traded the usual hardwood strips for durable aluminum miter bars from Incra, called Miter Sliders. They come in several lengths, pre-threaded for machine screws. They also have screws that adjust their fit in the miter slot. To allow you to do that from above the sled, I drilled access holes in the base.

For smaller tablesaws with a short distance between the blade and the front or rear edge of the table, I recommend the 24-in.-

***Transfer the screw locations.*** *The fences get threaded inserts for screws that pass through the base. To locate those accurately, start by extending the layout lines that marked the holes in the base (above left). Blue tape makes the lines more visible. Then, with the base panels riding in their miter slots, transfer those locations to the base of each fence (left).*

***Install the inserts and attach the fences.*** *Drill ⅜-in.-dia. holes for the ¼-20 threaded inserts, and install them on the drill press as before (left). Then attach the fences (below) to connect the base panels.*

## ADD THE INSERT

**The front fence gets an MDF insert plate, which can be changed out for a fresh plate as needed. You'll need to attach and remove the fences a couple of times for the following steps.**

***Test cuts reveal all blade positions.*** *Cut through the fences with a single blade at 90° and 45°, as well as your full dado set.*

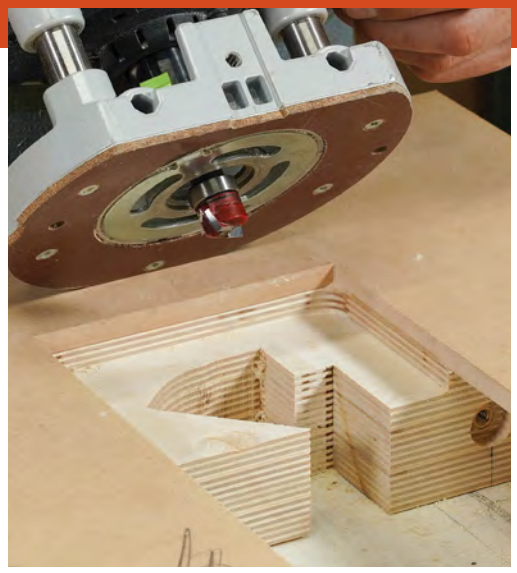

***Cut notches and rout the insert pocket.*** *Coalter connects the blade cuts and saws out a clearance notch in the front and back fences. Then he builds a template for routing the insert pocket in the front fence, to match the thickness of the 3/8-in. MDF inserts.*

long miter bars, which will extend past the sled to give better control at the beginning and end of cuts.

The payoff for the upgraded materials and extra time this sled requires? Perfect crosscuts, bevels, tenons, dadoes, slots, and rabbets, with minimal setup time, for many years to come.

### Tips for an accurate build

Rather than attaching the miter bars to the base first, which is tricky to do without the bars binding in their slots, I build my sleds in halves, attaching one miter bar to each side and then connecting the panels with the fences. It's easier that way.

**Fence-attachment holes—**There are just four counterbored holes for attaching each fence. Make sure your layout lines for drilling these will extend beyond the holes themselves; this will make it possible to transfer them very accurately to the fences later.

Drill the counterbores with a 3/4-in. Forstner bit, and then drill through with a 19/64-in. twist bit, which will follow the dimple left by the Forstner bit. If you end up needing a bit more wiggle room for fence adjustment, or don't have a 19/64-in. bit, a 5/16-in. bit will work.

**Installing threaded inserts—**I use E-Z Lok brass inserts throughout the sled; you can get them online or from a local hardware store. The #8-32 size works well here, grabbing nicely in the 1/2-in.-thick plywood. They thread into 17/64-in. holes, drilled slightly deeper than the length of the inserts.

To install the inserts squarely and solidly, I cut off the head of a #8-32 screw, add a couple of nuts to it, and clamp it in the drill-press chuck. To install an insert, twist it onto the insert tool, lower it into the hole you drilled, and clamp the panel to the drill press. Then put slight downward pressure on the drill-press handle as you turn the chuck by hand. When the going gets tough, use a wrench on the locked nuts to keep turning the insert while maintaining downward pressure. When the insert is flush with the surface, give it an extra turn.

To release the insert tool from the insert, use the spindle lock on the drill press to prevent the chuck from lifting, and loosen the lock nuts with a wrench. Then release the spindle lock and reverse the process you used to thread the bolt into the insert.

***Transfer the attachment holes.*** *After making a small stack of MDF plates to fit the pocket, insert one to drill 9/32-in. clearance holes for the attachment screws. Stop drilling when the bit just touches the bottom of the pocket, and use those dimples to locate 3/8-in. holes for the 1/4-20 threaded inserts.*

***Attach the plate.*** *After installing the threaded inserts on the drill press as before, and countersinking the holes in the insert plate, screw it into its pocket, flush with the front of the fence.*

## GET THINGS SQUARE

***Square the fences.*** *The fence attachment holes have a tiny bit of wiggle room in them. Lightly snug their screws and place a drafting triangle against the blade to bring each fence square to the sled. Then tighten the screws fully and make test cuts to be sure each fence position is perfect.*

**Attaching the fences—**Here's how to attach the fences accurately. To get access to their mounting holes, slide the base halves forward or back in their miter slots so their front and back edges overhang the saw table, and lightly snug up the screws that attach the fences. Now move each fence closer to the blade and use a plastic drafting triangle and some light tapping to square them. If the screws are just snug, you'll be able to shift the fences a bit and trust them to stay put long enough for you to fully tighten them.

Make sure that the sled slides well afterward, and for the final sled assembly, make a test cut with both fences to be sure they are dead-square.

### Get the best from your sled

The sliding base panels will lose material over time, and eventually need to be replaced. So I recommend making an extra set or two when you start. Make a bunch of extra fence inserts also. I change out backer plates for different tasks, like bevel and dado cuts, so each one provides zero-clearance support. Blank plates are easy to cut and drill, using the first plate as a template.

To adjust the base panels for a new blade setup, rather than touching them together and cutting off a full ⅛ in., just shift them over so they press against the edges of the blade(s) before making a fresh cut to establish the zero-clearance slot.

To protect the school's six sleds, I built wall racks, with storage built in for extra fence-insert plates and extra sliding panels. I did the same for my home-shop sled. It looks good enough to be wall art! □

---

*Chance Coalter teaches woodworking at Palomar College in San Marcos, Calif., and builds furniture on commission.*

## ADD THE SLIDING PANELS

**You've already installed the threaded inserts that hold these panels in place. Making the panels themselves is quick and easy.**

***Measure to the fence.*** *Measure from the centers of the threaded inserts to each fence. This determines the fence setting on the router table.*

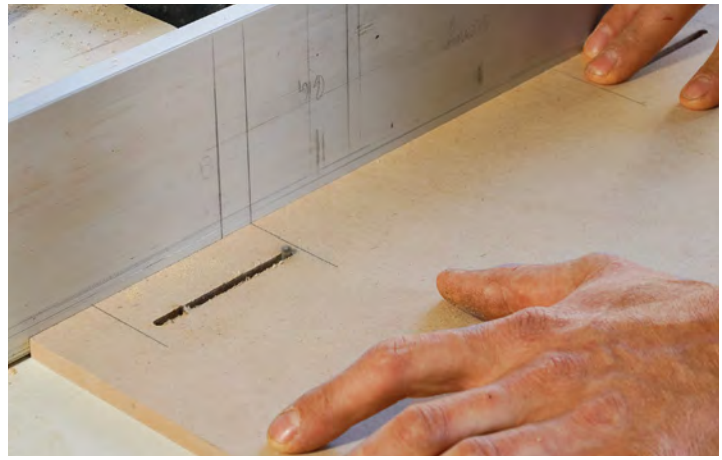

***Rout the slots.*** *Set the fence to center the bit on each slot location, and rout two slots without moving the fence: a shallow slot just deep enough for the screw head, and a through-slot for the body of the screw. Coalter does this by pivoting the panels down onto the spinning bits, with start and stop lines marked on the fence.*

***Attach the panels.*** *The panels are attached with truss-head machine screws, allowing you to slide them inward and outward as needed.*

# MAKE A WALL RACK

**Because my sled doesn't live on my saw, I built a rack for it to hang on the wall. It not only supports the sled safely, but also has pockets for extra fence inserts and space at the back for extra base panels.**

**It's made out of ¾-in. shop-grade plywood. The four identical side pieces are notched and tapered, and the rest of the parts are simple rectangles. The top and bottom notches fit over the top and bottom rails. The big center notches give your hands a place to go when you are hanging up the sled, and create storage pockets in the sides. The taper ensures that the sled will never fall off the rack. Assemble the rack with glue, brads, and drywall screws.**

**You can use fat dowels as the hanging pegs that fit into the sled handles, but I made mine more robust by laminating plywood and rounding one edge. Before mounting the rack on the wall, I laid the sled on it and mounted the plywood pegs with glue and screws. Then I attached the hanger to a wall in my shop.**

**To hold the extra base panels inside the rack, I attached a small plywood cleat on the left side.**

**—C.C.**

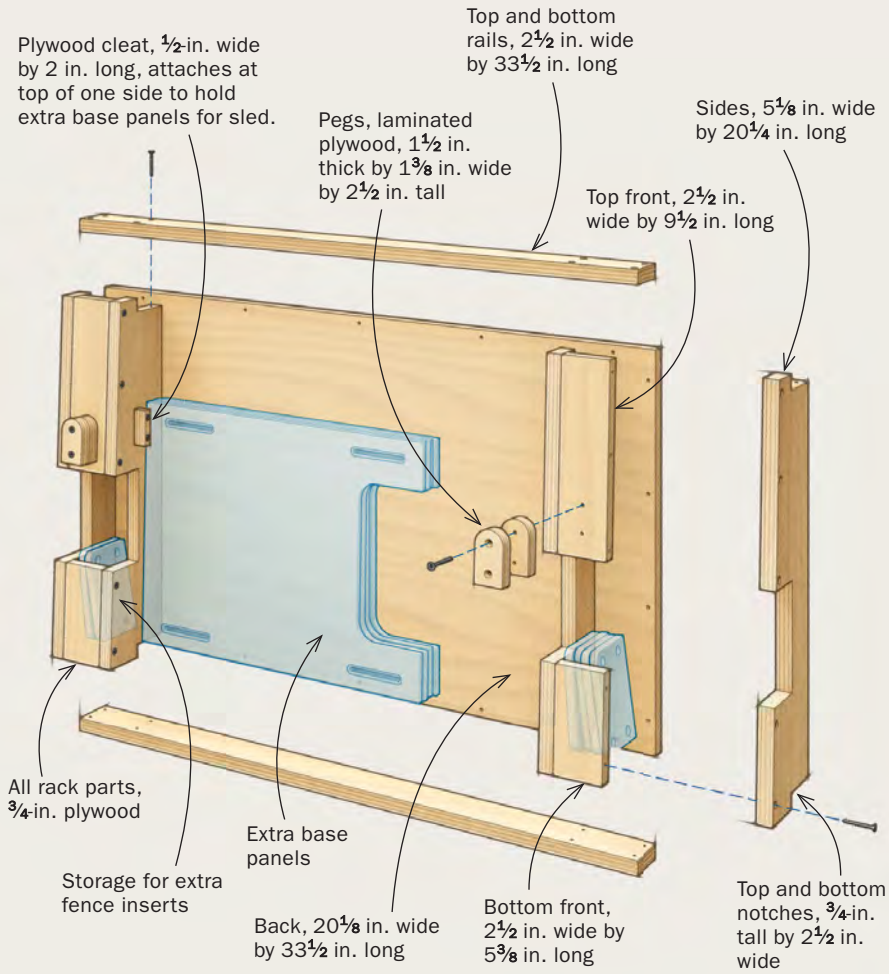


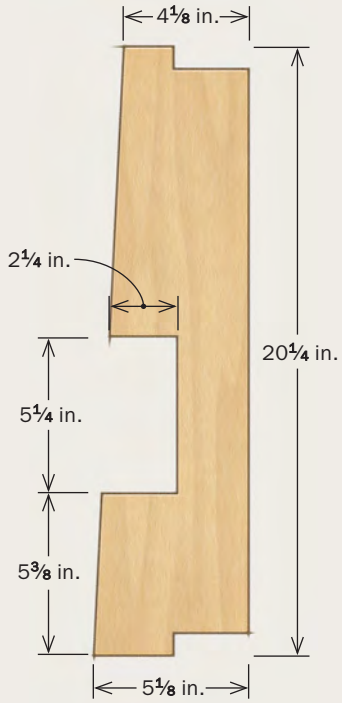


SIDE PANEL