Two-Board Chairs

Plans and methods from a Swiss woodworker

by Drew Langsner

The craftsmen of southern Germany, Austria and Switzerland have long been known for their fine sense of design and their excellent craftsmanship. From woodcarving to the magnificent log-and-timber-frame farmhouses, examples of their skill can be found throughout the Alps. This is also the region of the famous fairy-tale chair with the cut-out scrollwork back, painted or chipcarved with hearts, flowers, initials and dates. The chair is called a *Bretstuhl* (board chair) in Germany, or a *Stabelle* in the Swiss-German dialect, Berne Deutch. In English it is sometimes known as a two-board chair or fiddle-back. It ranks with the Windsor and the ladderback post-and-rung chair as a great example of folk furniture.

The construction is almost identical in chairs made throughout the region; individuality is emphasized in the contour and carving of the chair back. Most prominently defining a two-board chair is the beautifully simple manner in which the back and seat are joined—by two through mortise-and-tenon joints secured with tusk tenons under the seat. The backboard tenons pass through mortises not only in the seat board, but in battens in the seat bottom. These battens, which receive the leg tenons, are sliding dovetails, held in place by the backboard tenons. The battens are thicker than the seat board, but set back from the front of the seat to maintain the overall appearance of lightness and simplicity. Their thickness allows the straight-tapered octagonal legs to be mounted free of stretchers.

These chairs can be knocked down for storage or shipping. The backboard comes loose by removing the two tusk tenons. The sliding-dovetail battens and legs can then be driven out of the tapered housings in the seat bottom, and the disassembled package measures 18 in. by 20 in. by 8 in.

My introduction to the two-board chair was in Switzerland, where I've twice had the pleasure of working with Rudolf Kohler, a cooper who also makes a fair number of these chairs each year. In the fall of 1980, Kohler and I took a break from coopering to build a chair together. Kohler gets the credit for the more difficult work, as he wanted to be certain that the *Stabelle* going to America would be a good one. The chair dimensions given in this article are in inches, and vary slightly from Kohler's metric measurements. Exact equivalents would be awkward, and they are not necessary. As chairmaker John Alexander says, "Chairmaking is an approximate craft." There can be considerable variation from one chair to another, even in a matching set.

Kohler's two-board chair is made from ten pieces of wood: The seat, the back, four legs, two sliding-dovetail battens and two tenon tusks. In the Alps, two-board chairs are usually made from hard maple. Ash is sometimes used for the legs and sliding dovetails.

Kohler buys his chairwood in the form of plainsawn slabs from a local mill. He never buys edged boards, as every bit of wood is used. The slabs are stickered to air-dry in a drafty loft for at least two years. The wood we used had seasoned for eight years. Several weeks before starting a chair, Kohler moves his wood to the overhead racks in his shop. No moisture-content measurements are taken, but the shop is usually very dry. Most of Kohler's chair work is done during the long winter, when his shop woodstove burns every day. The warm shop acts as a kiln. Cold, dry air infil-

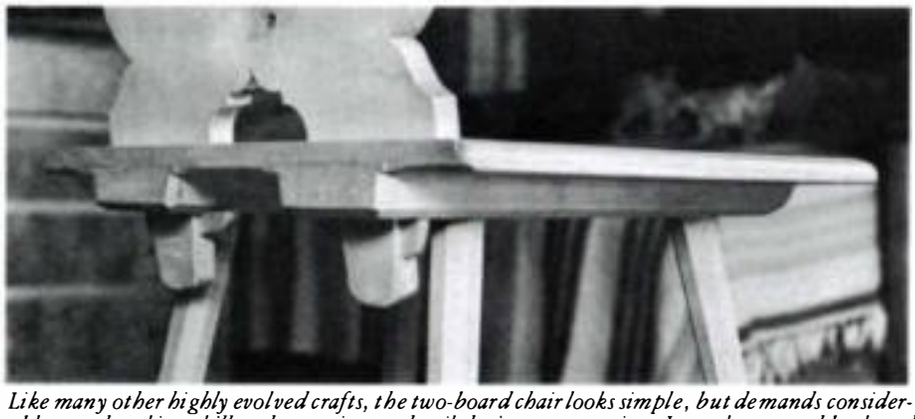

Like many other highly evolved crafts, the two-board chair looks simple, but demands considerable woodworking skill and attention to detail during construction. Its tusk-tenoned back and sliding-dovetail battens to receive the legs, above, make it a sturdy, yet light, knock-down design.

Photos, except where noted: Drew Langsner

trates from outside. As the air warms inside the shop, it picks up moisture from the wood and then leaks out, letting in more cold, dry air. The relative humidity in the shop remains low.

Although the *Bretstuhl* design has been around for generations, the introduction of power tools has affected the actual construction methods. The most prominent machine in Kohler's tiny shop is a massive combination planer/jointer/shaper. Kohler also uses a bandsaw, a sabersaw and a router where a turning saw (a bowsaw with a narrow blade whose orientation can be varied) and planes were traditionally used. Leg tenons are turned on the lathe.

As is usual, the first step is milling the rough lumber. The planer is large enough to handle the 16¼-in. wide seat blanks and the backboards, both dressed to ⅞ in. The sliding-dovetail battens are planed to 1⅜ in. Kohler used to make these battens only ⅞ in. thick. In those older chairs the leg tenons were mortised through both the sliding-dovetail battens and the seat board. The tenon ends were then wedged from above. Kohler says that the thicker battens, which house stopped mortises, allow the seat board to move freely with moisture variation. Also, the end grain of the tenons is encased, making them less responsive to changes in humidity. After dressing both faces of the sliding-dovetail stock, Kohler joints one side. Using a bandsaw he rips the second side so that the width tapers from 3⅜ in. to 2⅞ in., then joints this resawn side to a finished width tapering from 3¼ in. to 2¾ in.

Dressing the leg blanks begins with planing all four sides to a 1⅜-in. square. To make the taper Kohler runs the legs through his planer on a wooden tray with a tapered bottom board that inversely matches the taper of the leg. The final dimensions taper from 1¼ in. to 1 in. square. Kohler turns the leg tenons 1 9/16 in. long with a diameter of 15/16 in. He chamfers the end and the tenon shoulder at 45° for 3/16 in. To size the diameter Kohler uses a test hole bored in a ¾-in. hardwood board. He likes a very snug (but not extremely tight) fit so the tenon squeaks when it is twisted in the hole. The legs are finished by hand-planing to an octagonal section, with proportions judged by eye.

Outlines for the bottom and backboards are transferred from cardboard patterns. Kohler has used the same patterns for over 30 years, with just one variation—the addition of three small curls to the C cutouts on the sides of the backboard. The outlines are traced with a pencil and sawn on the bandsaw. Small details of the back are shaped with an electric sabersaw. The scrollwork is dressed with flat and half-round rasps, then sanded smooth. The front edge of the upper section of the seat back is rounded, nowadays with a router, formerly by spokeshaving and sanding. The remaining scrollwork is dressed square to the faces. Edges are then softened about 1/32 in. with a piece of sandpaper. The tapered mortises through the seat-back tenons are made after the sliding-dovetail battens are fitted to the seat bottom.

The tapered housings for the sliding-dovetail battens are laid out parallel to the sides of the seat bottom after the

Plans for a two-board chair

Materials list (blank sizes)

Name	No.	T	W	L
Seat	1	5/4	16¼	17¾
Back	1	5/4	12½	21
Battens	2	8/4	3¾	16
Legs	4	1⅜	1⅜	21¾
Tusk tenons	2	⅜	1	3½

Bore 15/16-in. holes; angle front legs 75° forward and 80° to the side; back legs 72° backward and 77° to the side. Use jig as shown in photo, next page.

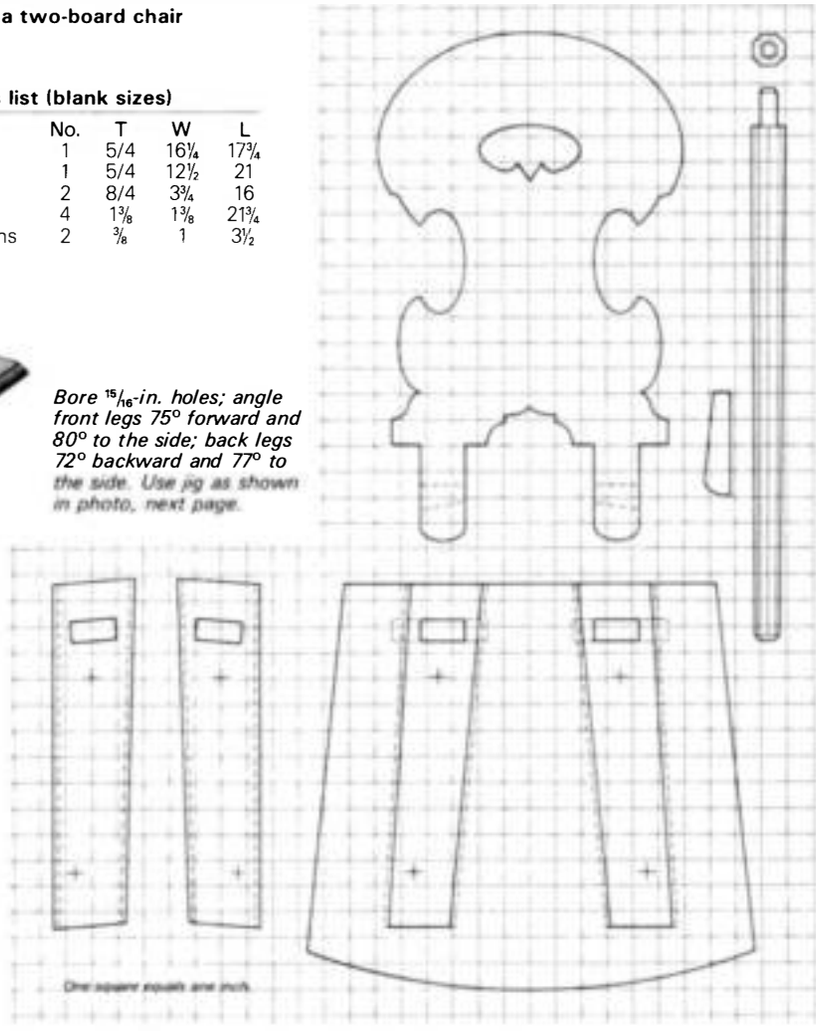

Kohler uses a wooden box with slots in boards across the top to jig his brace and bit to the proper angle for boring the leg mortises.

Design variations on the two-board chair include a slatted back, right, and battens running the width instead of the length of the seat, left. Note that the decorative cutout in the back serves also as a handhold. Photos: Armin Erb.

sides and back of the blank have been jointed, and the curved front dressed with a spokeshave. The outside edges of the housings should be 2½ in. from the sides. To excavate the housings, Kohler starts by chiseling out the last 2 in. before the front stop. He then uses a backsaw to cut the side kerfs at an 80° angle, 5/16 in. into the board, and cleans out the cavity using an electric router and a dovetail bit. The whole cavity could be excavated with the router and a fence, but instead Kohler uses his router freehand, and the saw kerfs are useful boundaries

The tapered sliding-dovetail battens are individually fitted to the finished housings. Kohler cuts the side angles using a router with a dovetail bit. A dovetail hand plane can also be used. The front of the dovetail tongue is cut back so that the end of the batten overlaps the chiseled stop in the housing. A simpler batten with beveled sides instead of a dovetail tongue is sometimes used on plainer chairs. This version doesn't require using a router or dovetail plane; the stock can be cut on a tilting-arbor saw or planed to shape.

Mortises through the seat board and battens are chiseled at an angle of 80°. They are cut a little wider than the tenons, to allow for expansion and contraction of the backboard, which runs cross grain to the seat board. In addition to the through mortises, Kohler chisels a ⅛-in. deep housing for the shoulders of the backboard tenons. This conceals any gap between mortise and tenon. The backboard tenons are fitted, and the baselines for the tusk-tenon mortises are marked flush with the bottom face of the battens. The back is removed, and the tapered mortises are chiseled in the backboard tenons 1/16 in. inside the line scribed when the back was in place. Kohler makes these mortises ¼ in. wide, tapering from ⅞ in. to ⅝ in. The tenon tusks are 3½ in. long.

While the chair is apart (the sliding-dovetail battens are also removed), Kohler dresses the upper and lower edges of the seat board. He routs the upper edge with a beading bit. The lower edges of the front and sides are deeply chamfered with a plane, which adds to the visual lightness of the piece. The chamfers on the back of the seat are carefully shaped with a drawknife. All four lower edges of the sliding-dovetail battens are relieved by routing with the quarter-round bit.

Kohler bores the mortises for the leg tenons with the dovetail battens back in place. The front legs cant forward at 75° and to the sides 80°. The rear legs angle back 72° and to the sides 77°. For accuracy, Kohler uses a homemade boring jig (photo, above). The jig is a wooden box about 16 in. by 16 in. by 6 in. The bottom of the box has a large trapezoidal opening that fits snugly over the mounted battens, and the top of the box has a central opening and four angled slots ⅝ in. in width. Kohler punches predetermined centers on the battens, the jig is fitted into place and correct angles are bored by holding the auger at the end of the slots. Kohler doesn't use a depth control, but he aims to stop just at the base of the battens.

Just before the final assembly, the separate chair parts are given a careful sanding. Fitting the legs is simply a matter of dabbing a little white glue on the tenons, then pounding the legs in place. After assembly, the legs are trimmed. On Kohler's standard chair the upper front edge of the seat is 18⅝ in. high. The seat angles downward slightly so that the upper rear edge is 18⅜ in. from the floor.

The next stage is decorating the back. Kohler is an excellent chipcarver, but that's a skill for someone else to write about. The *Stabelle* for America was finished, and we picked up where we'd left off with our coopering. □

Drew Langsner is director/instructor at Country Workshops, Rt. 3, Box 221, Marshall, N.C. 28753. Workshops include white oak basketry, July 20-24; country woodcraft, Aug. 3-7, and post-and-rung chairmaking, Aug. 17-21.