A Drafting Table for Shop or Home

Torsion-box top and simple joinery make a light and sturdy table

by Cameron Russell

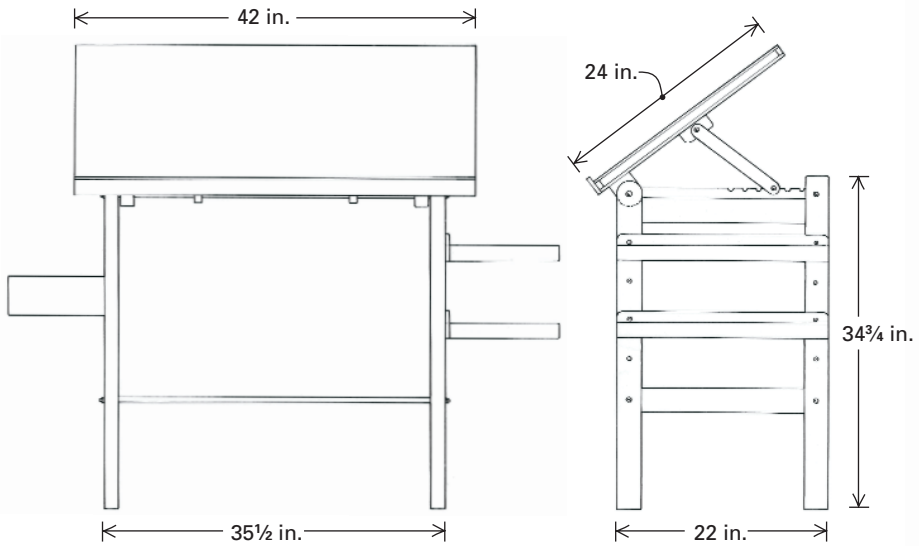

Front view **Side view**

The drafting room at the college where I teach furnituremaking had long been a sore spot with me. The tables we used were industrial-type library tables, not designed for drawing. The students who used them were far from comfortable. For hours at a time, they hunched over a flat surface that was at the wrong height. It made drafting a pain.

To solve that problem, I designed and built the prototype shown in the top photo on the facing page. After working out the bugs in the design, I realized that this would be a good beginner's project for the woodworking class. By the time the projects were finished, we had refitted the drafting room at the school, and the students were a lot more comfortable.

The construction process is simple, and the hardware we used is readily available from hardware stores or mail-order supply houses. The knockdown design makes it easy to disassemble the table for storage or moving. The torsion-box top is rigid and dead flat, yet light and portable.

The key hardware components holding the table together are four threaded rods that fit within metal pipes. The nuts and washers on the ends of the threaded rods pull the leg assemblies firmly together while the rigid lengths of pipe keep the two sides apart. This combination of tension and resistance to compressive forces stiffens the structure. The smooth cylindri-

Torsion box core makes top lightweight and strong.

Support pivot screwed to tabletop

Hinge

Notched supports hold top securely at different angles.

Copper plumbing pipe or electrical metallic tubing houses threaded rod.

Threaded inserts for mounting trays, 4 in. on center

A knockdown drafting table

Built with common materials and knock-down hardware, this table is inexpensive and easy to make. Movable hinged supports make it possible to adjust the top to different angles. Accessory trays mounted on the sides provide plenty of storage space for drafting materials.

Building the torsion box

Core framework of pine is lightweight and rigid. The six frame pieces that are wider receive threaded inserts to hold the top to the hinged support pieces.

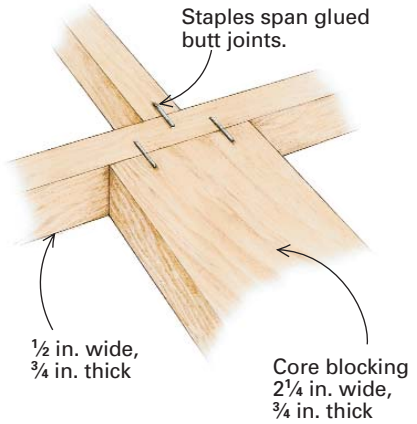

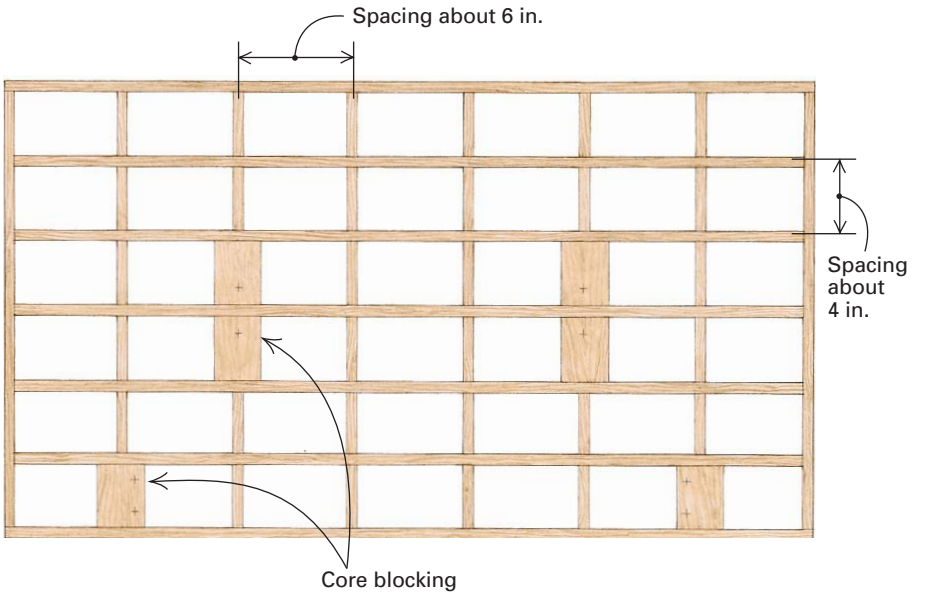

Butt joints are plenty strong. *Glue and staples hold the core framework together. The torsion-box top assumes full strength once the plywood skins are glued to this frame.*

cal surface of the metal pipe also provides an ideal pivot pin for the tilting top.

Torsion-box: light but strong

The design for the top guarantees that it will be lightweight, dead flat and strong. The outside skins of ¼-in. plywood are glued to the narrow surfaces of an internal wood frame, and the considerable overall surface area makes a healthy bond. As with any face-to-face gluing of wood, this construction process offers a lot of resistance to twisting forces, making the panel very rigid for its size and weight.

I built this tabletop 24 in. wide by 42 in. long, but the lower structure could easily handle a top up to 30 in. wide by 60 in. long. If you plan to fit a drafting-arm machine or a parallel straightedge to your table, take that size into account when you determine the length of your top.

The internal framework of the top's core consists of ribs of lumber ½ in. wide by ¾ in. thick, as shown in the drawings and photos above. It's a good idea to add a few wider blocks to receive the fasteners that secure the pivoting top to the lower frame. The extra size gives you a little more leeway for mounting the hardware.

Mill all the lumber for the ribs at the same time to ensure they're all the same size. Also, accurately marking the locations of intersections where ribs are joined together

Drawings: Gary Williamson

Construction details

These drawings show the important details of parts that connect the top to the lower frame. For rigidity, the holes for the metal pipe should have flat bottoms and furnish a snug fit. If you use a spade bit (left), you may have to grind it down.

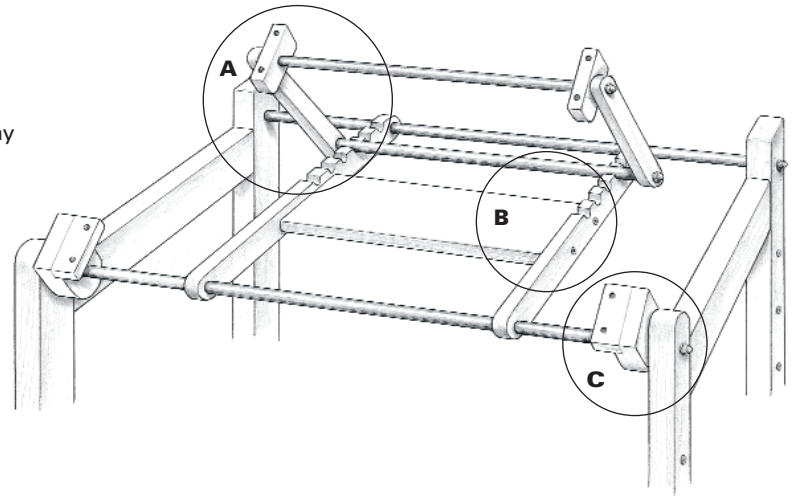

A. Section through top prop

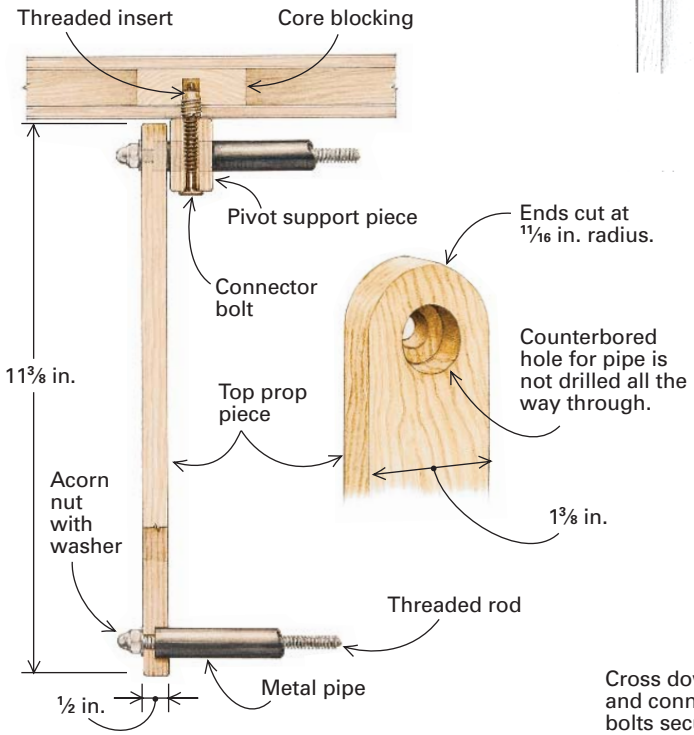

C. Section through top hinge mount

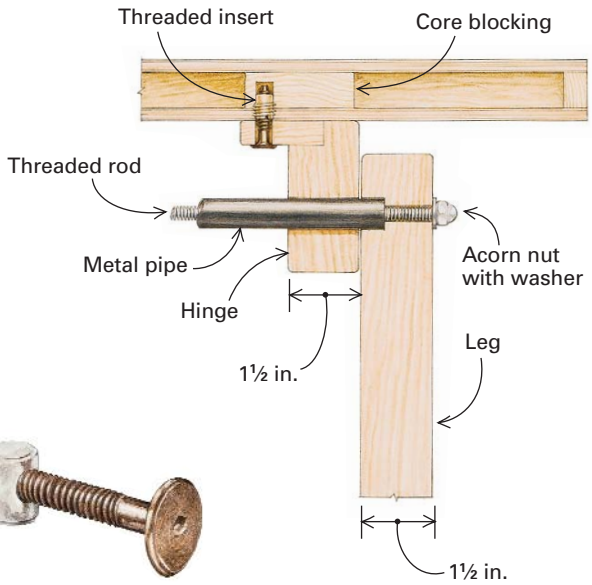

Cross dowel and connector bolts secure notched supports to rail.

B. Section through notched supports

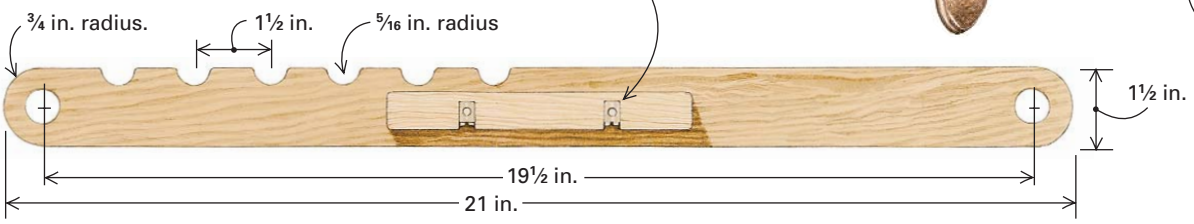

is important. Apply a small spot of glue to each joint, and drive a staple to span the seam, as shown in the photos on the facing page. Use a small-gauge staple and gun. Once one side of the frame is complete, flip it and staple the other side.

Gluing the plywood skins to the core frame requires a lot of pressure. A large veneer press is ideal, but if you don't have one, you might ask someone at a local cabinet shop to glue up the skin for you. You can do it yourself by sandwiching the top between sheets of plywood weighted down with bags of cement or boxes of nails. In any case, mark the hinged edge before adding the outside skins—you'll avoid trouble later when you want to install threaded inserts for the wood-hinge mounts.

Legs and notched support rails

Each side of the table is made with a front and rear leg joined by two rails, as shown in the drawings on pp. 74-75. We used mortise-and-tenon joints to connect legs and rails, but either dowels or biscuits also could be used.

The size of the table calls for standard lengths of 36-in. threaded rod. The pipe can be either thin-walled, ½-in. EMT (electrical metallic tubing) or ½-in. copper plumbing pipe. The copper is much more expensive, but it can be polished and clear coated for a visually pleasing finish. If you

Photos: William Duckworth

Accessory trays are adjustable. *They are fastened with connector bolts to threaded inserts mounted in the legs. The author's design calls for two shallow trays and one deep one.*

use the EMT, you might want to dress it up a bit with primer and paint.

When drilling holes for the pipes in the legs (and in the prop pieces for the underside of the top), drill the counterbored pipe holes first. You can use the center point left by that hole to line up the bit for the smaller hole that the threaded rod passes through. Depending on the type of pipe you choose, the diameter of the hole may or may not be a standard size. It's critical for the overall sturdiness of the table that the pipes fit snugly within the counterbored holes with no slop.

A 5/8-in.-dia. hole should be right for the 1/2-in. copper plumbing pipe. The outside diameter of 1/2-in. EMT is between 11/16 in. and 3/4 in. The best method I know for getting a snug fit for the EMT is to file or grind down a 3/4-in. spade bit until it makes a hole into which the pipe fits just right. Don't forget to mark the bit, so you don't get it mixed up with your standard-sized bits.

The other wood parts are easy to cut, drill and shape. Half-round holes in the notched supports (see the drawing on p. 77) can be drilled by clamping two pieces together, edge to edge, and using the joint line as the centerline. With any part that must revolve around the metal pipe, like the hinge blocks mounted to the underside of the top, be sure to drill the hole large enough to allow free movement. Sand and finish all the wood parts before assembly.

Assembling all the parts

Once you've fabricated and finished all the pieces, putting them all together is a cinch. Start with the legs and notched support-rail assembly. It's important to remember to slip the hinge-block pieces over the pipe as you do this, so the hinge blocks are in place when you want to secure the top later. The only tools you'll need to set up this table (or take it apart) are a box wrench, a ratchet, for the threaded rods with acorn nuts, and an Allen wrench, for the connector bolts.

The small blocks of wood that allow the top to pivot and to be supported at different angles are bolted through into threaded inserts set into the underside of the top. For applications like this, where I thought parts would have to be taken apart and put back together many times, I used threaded inserts and bolts.

If you plan to assemble the table and leave it set up, you could certainly substitute regular wood screws for some of this hardware. Keep in mind, though, that ready-to-assemble hardware makes adjustments easy when aligning the moving parts of the tilting and supporting pieces.

I also installed threaded inserts on the outsides of the legs for rearranging or adding accessory trays for drafting equipment (see the photo above). You could customize your own table to handle other specific accessories, such as a paper-roll holder or a T-square rack. □

Cameron Russell teaches furnituremaking at Camosun College in Victoria, B.C., Canada. He also spends some of his free time restoring a 1963 MG roadster.