Jigs for Routing Perfect Curves

With the right bit and jig, your router table can handle any curve with ease

BY BOB VAN DYKE

Incorporating curved parts into your work expands your design possibilities dramatically. Although curves can be achieved with hand tools, pattern routing with a router table may be a better option, especially if you must make numerous identical parts. With this technique, parts are attached to a shaped pattern that rides against a bearing-guided router bit, letting you duplicate parts quickly and easily.

There are different styles of jigs to choose from. Your choice hinges on how frequently you expect to use it, how you'll secure the workpiece, and, most importantly, the steepness of the curve you are routing and whether it has dramatic grain changes.

Routing uphill (against the grain) can cause tearout, so avoid it when you can. Climb-cutting, moving the workpiece left to right, should always be avoided as it risks losing control of the workpiece and drawing your hand into the cutter. With the right jig, you'll always be able to rout safely, from right to left, while cutting entirely downhill (with the grain) or uphill only on shallow curves. For more on router table safety and feed direction, see my Fundamentals "Getting started with router tables," (*FWW* #270).

Use solid wood for the master pattern

Whichever jig you're using, you'll need a master pattern shaped to the part you need. This master generates the plywood jig that will be used to make the actual parts. While I prefer durable Baltic-birch plywood for the jig, I like thin pine or poplar for the master because these woods are easy to shape with hand tools. Refining curves with hand tools like a spokeshave or compass plane is usually better than using a spindle sander because, with the sander, it is all too easy to make parts that seem to have a fair curve but actually have lumps that will transfer to your furniture part. It's much easier to produce a smooth, fair curve with a spokeshave or compass plane. Make sure to account for joinery locations in the master. When the master is done, turn to the actual shaping jig.

Reusable jig for gentle curves

With this template jig you can quickly shape a workpiece in one pass, making it a great choice for mild curves. Its fences and toggle clamps make it well suited for shaping numerous identical parts.

A bit about bits

Bits for pattern routing can vary in important ways, such as bearing placement, size, and cutter orientation. My choice boils down to quality of cut and affordability.

Flush-trimming bits, with the bearing at the tip, are a safer option because the cutting action is below the template. So I use these when I can. Straight bits (at left in photo) are the cheapest of the bunch. But because they don't always leave a passable surface in solid wood, I use them mostly for plywood or MDF. I prefer spiral bits (at right) for solid wood. Although they are more expensive, their shearing action leaves a cleaner surface.

Pattern bits have the bearing at the shank, making them handy for jigs where the template is below the workpiece. I often use a large-diameter pattern bit (at left in photo) on solid wood, since its extra mass helps reduce tearout.

When I want a large-diameter pattern bit with a spiral cut (at right), I take a page from my friend Will Neptune's book and make my own, slipping two bearings and a bearing lock onto the shank of a ¾-in. spiral bit. I recommend using two bearings in case one of the bearings seizes up, which I've had happen.

Make your own large pattern bit. *Just pair an Onsrud ¾-in. spiral upcut bit (Model 40-141) with two Whiteside ½-in. ID, ¾-in. OD bearings (Model B19) and a bearing lock collar (Model LC-½).*

Combination bits have bearings at both the tip and the shank, making them a very convenient option. With these over/under bearings, you typically won't need to switch out your bit to accommodate whether your template's above or below the workpiece. Here they are pictured with straight and compression cutters. Compression bits (at right in photo), available with flush-trimming, pattern, and over/under bearings, leave an even cleaner surface than spiral bits. If they weren't so pricey, I'd use these bits all the time.

Photos: Barry NM Dima

A jig for shallow curves

This type of jig is easy to use and excellent for making numerous identical parts. Use it when you don't have to rout steeply uphill into the grain or shape workpieces with dramatic grain changes.

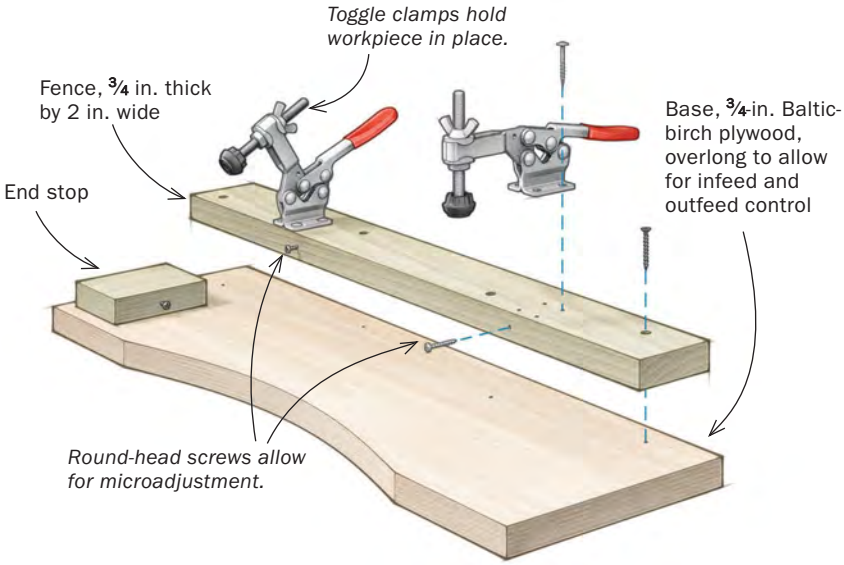

TIP

HOT ROD YOUR TOGGLE CLAMPS

Van Dyke replaces the clamp's bolt with a longer one to accommodate a wider range of part thicknesses. He also replaces the upper nut with a wingnut for quick height changes. Finally he covers the bolt head with a rubber crutch tip, available at hardware stores.

HOW TO MAKE IT

Start with a master pattern. *Lay out, cut, and refine the solid-wood master (right). Next, trace the master's shape onto the base, making sure its ends are flush with the front edge of the base (far right). Then, bandsaw 1/16 in. away from your line.*

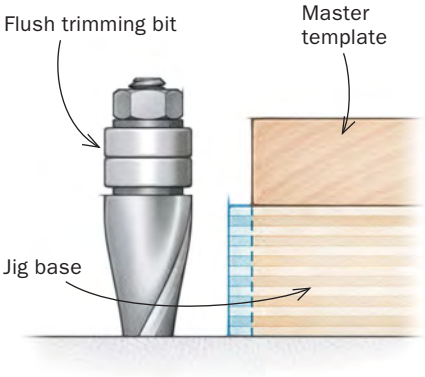

Shape the base. *Clamp the master in place and rout the base with a flush-trimming bit. Adjust the bit so that the bearing rides along the master template. Rout from right to left, taking care not to cut beyond the beginning or end of the master.*

HOW TO USE IT

Rough cut the workpiece. *Use the master to trace the profile onto the workpiece. Head to the bandsaw and trim the part, staying an even 1/16 in. away from your line.*

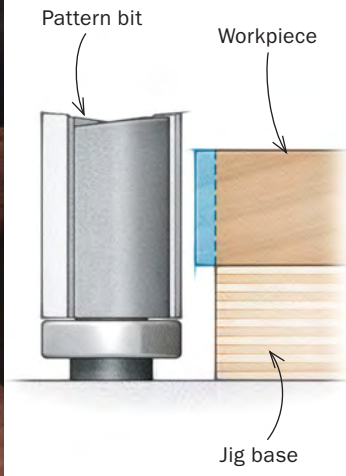

Rout the profile. *Set the micro-adjust screws so the front edge of the workpiece overhangs the front edge of the jig. Then use a pattern-routing bit to rout the profile. Adjust the bit height so that the bearing rides along the edge of the base.*

The profile of the jig's base is shaped from the master pattern. After installing a fence, stop blocks, and toggle clamps, trace the master onto the base and bandsaw the profile a consistent 1/16 in. away from your line. Clamp the master onto the jig and use a flush-trimming bit to bring the base to final shape. When routing the actual workpieces, switch to a pattern bit. The bit's bearing will ride on the edge of the jig, with the workpiece clamped to the top.

I make the base from 3/4-in. Baltic-birch plywood. MDF works, but Baltic-birch holds screws better, its edge is tougher, and it is less messy to rout. Fences and end stops let you register each workpiece repeatedly, and toggle clamps hold the work in place. Two should do, three on larger jigs. Position them as close as possible to the front edge of the fence to maximize their holding power.

Round-head screws driven into the edge of the fence and end stop let you fine-tune the shape and prevent chips and sawdust from holding the work off the fence. When designing this jig, include flat areas for the bearing to ride on before and after the actual cut for control and safety.

A different jig for tight curves

While easy to use, the reusable jig I just described is limited to situations where you are not forced to rout steeply uphill or shape workpieces with dramatic grain changes. Luckily, there are a couple of other routing jigs that will allow you to make the majority of your cuts downhill. Both involve routing the shape in multiple steps.

Drawings: Christopher Mills

Half-pattern for tight curves

When symmetrical curves get steeper, make a jig to rout half the profile, then flip the stock over to rout the rest. This does away with the need to rout against the grain, which could cause tearout.

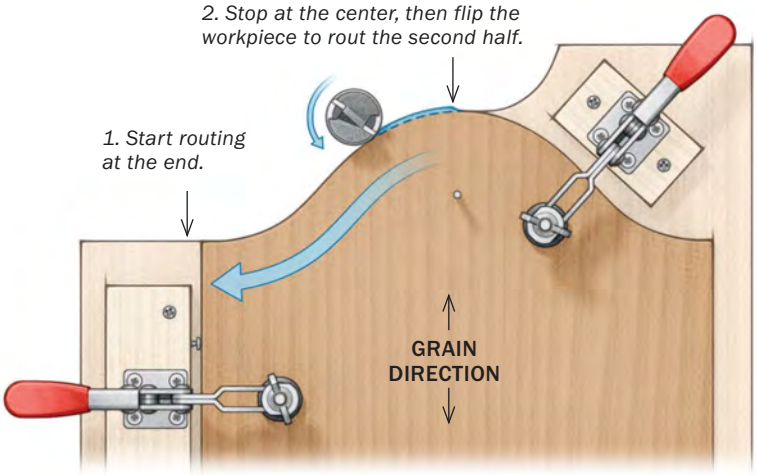

A jig for steep, symmetrical curves—This jig relies on the curve being symmetrical. It's made similarly to the previous one, but you rout only half of the master pattern's shape onto the base—whichever half lets you cut downhill when routing from right to left.

Once again, establish infeed and outfeed sections where the bearing can contact the jig before and after the router engages the workpiece. You can bandsaw these freehand. When routing your workpieces, you'll tackle one half at a time, flipping the workpiece in between. This prevents you from ever routing uphill around a bend. You will have a little bump in the center where the two halves meet, but that is simple enough to fair by hand.

Flippable template for challenging parts—I sometimes use a template alone to rout curves. The template is attached to the workpiece, and routing can be done with either the template or the workpiece on the bottom, letting you rout steep curves and challenging grain. This method's simplicity also makes it attractive for one-off operations, even though it is more cumbersome to use.

Instead of a base, fence, and toggle clamps to register and secure the workpiece, you attach the template directly to it using screws,

HOW TO MAKE IT

Start with a master pattern. *For a symmetrical shape, make a half-pattern, flip it over a centerline, and draw the second half. After refining it, align the master with a centerline on the base and temporarily screw it in place.*

Rout the base. *When tracing the master onto the jig, pencil on your infeed and outfeed areas. This will give the bit's bearing something to safely ride on when you enter and exit the cut. After bandsawing the base, use a flush-trimming bit to rout the jig to its final contour.*

Rout the first half. *A carefully adjusted fence and a centered pin ensure a symmetrical curve. Instead of a pin, you can use a second fence to register the bottom of the workpiece. The infeed and outfeed ramps allow for smooth and safe routing.*

Flip and repeat to shape the second half. *Once again, the pin and the fence align the workpiece. Use a pattern bit to rout both halves.*

nails, or double-sided tape. I prefer screws or nails, which are easier to remove and less of a hassle to position accurately. Ideally, there will be a few places on the workpiece where a nail or screw hole is not a problem—maybe where a mortise will go or in a section that can be cut away later. If not, I use double-sided tape. Make a section of the template longer than the workpiece to give the bearing a place to ride before and after the cut.

Because the template attaches right to the stock, you can flip the assembly depending on grain direction. When you flip it over, you'll need to switch between top-bearing and bottom-bearing bits depending on whether the template is located above or below the work. The more convenient option is a bit with over/under bearings. These eliminate the need to switch bits—just flip the workpiece and raise or lower the bit as needed.

Before beginning, plan your cuts. Mark on the template and workpiece where to rout and where to stop and flip the assembly.

Fair the bump. *You'll inevitably have a small imperfection in the middle. This can be quickly sanded away.*

Template that flips

Instead of building a more complicated jig, you can attach a template directly to the workpiece. This way, using bottom- and top-bearing bits, you can rout with either side up, ensuring that you're always routing downhill.

Template attaches directly to the workpiece. *Make the template longer than the workpiece where you'll enter and exit the cut. This adds control, letting you ride the bearing on the template before cutting the workpiece.*

Rout downhill. *On this U shape, Van Dyke stops each pass at the apex of the curve. For this pass, with the template above the workpiece, he uses a flush-trimming bit.*

Switch bits when flipping the work. *Van Dyke routs this shape in two passes, stopping at the peak of the curve so he only routs downhill. For the second pass, since the template is now below the workpiece, he uses a pattern bit.*

Pair pattern and flush-trimming bits for extra capacity

When you're faced with shaping a piece that is 2 in. to 4 in. wide, a single bit won't make the cut. But that's not a problem, since you can start the job with a pattern bit and finish with a flush-trimming bit. This lets you combine the length of the two bits.

Begin with a pattern bit. Screw your template to the bottom edge of the workpiece, set the bit height so the bearing contacts the template, and rout. Next, change to a flush-trimming bit, flip the workpiece, and finish the cut. The bearing on the bit will register off the surface that you just cut with the pattern bit. But when you flip the assembly you'll need a way to prevent it from tipping. I attach an outrigger the same height as the workpiece. □

Contributing editor Bob Van Dyke runs the Connecticut Valley School of Woodworking.

TIP

ELIMINATE BIT CHANGES WITH OVER/UNDER BEARINGS

If you use a combination bit, with bearings at the tip and shank, you can simply raise and lower the bit when you flip the work.

Routing wide parts

For parts wider than the length of your bit, you can rout one half using a template and a pattern bit and the other half using a flush-trimming bit.

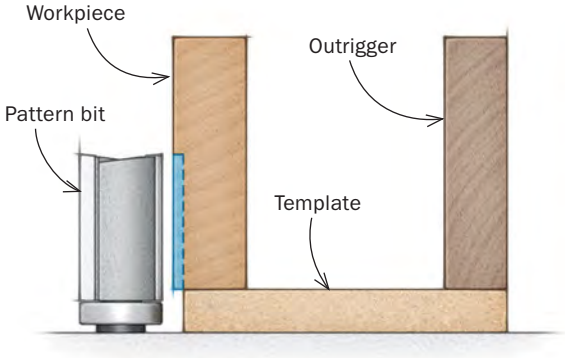

1. Start with the template on the bottom and rout a portion of the waste with a pattern bit.

2. Flip the template and use a flush-trimming bit to complete the profile.

A template with an outrigger. *Screw the workpiece to the template. Attaching an outrigger to the template—a piece of stock that's the same width as the workpiece—allows Van Dyke to rout with either side up.*

Pattern rout first, flush-trimming second. *A pattern bit registers off the template to rout the bottom half first (above). The template has extra material on the infeed and outfeed ends for smooth entry and exit. Next, flip the assembly over and use a flush-trimming bit. The bearing will register off the surface that you cut with the pattern bit. There's no infeed or outfeed support this time (right), so be extra mindful when you rout.*