The Taming of the Skew

Subtlety, not force, wins favor

by Mike Darlow

For each piece of wood, an efficient turner employs the minimum number of tools, each, if possible, only once. This means being able to use each tool for a variety of cuts. No tool in a turner's kit has greater potential for this than the skew chisel—it planes surfaces smooth, cuts balls and beads, defines fillets and even makes coves, working all the while with a precise, responsive touch—yet the skew has a reputation for being the most unforgiving and unpredictable turning tool. It requires large, confident movements to slice its thin shavings, but a single small movement in the wrong direction can cause the tool to dig in and ruin the work. Indeed, the *Fine Woodworking Design Books* confirm, to my eye, that many turners deliberately avoid cuts requiring the skew, compromising on the preferred design in order to be able to use a gouge or scraper. If you slice with a skew instead of scraping, you will cut cleaner and produce finished work faster. We can create confidence in the skew by understanding the tool's geometry and practicing the various cuts.

Tool geometry—The skew is a long, straight-bladed chisel with its cutting edge ground at an angle to produce two very different points—an acute one called the long point, and an obtuse one called the short point (figure 1). There are two bevels, usually equal, ground on the sides of the tool to form the cutting edge. Perpendicular to the sides are two edges: one leading to the long point, called the long edge, and one leading to the short point, called the short edge.

For consistency, it is essential that the skew's sides are truly parallel, so that the cutting edge can be parallel to both of them, and that the long and short edges are at 90° to the sides. The width of the sides defines the nominal size of the skew, and sizes vary between ¼ in. and 2 in. Most general turning is done using a ¾-in. or 1-in. skew. This is a compromise between a long cutting edge (an advantage in planing) and narrow sides (which allow work in tight places). If a constricted space dictates using a smaller tool for part of the work, a production turner must decide whether to use a small skew for the whole job, or to pick up two or more different skews. If there is a large proportion of planing in the work, the turner will probably use two. Where a skew with sides narrower than ¼ in. is required, it is preferable to grind the long edge down at the end to make a shorter cutting edge in order to preserve reasonable stiffness. The minimum thickness of a skew should be ¼ in., or else the tool will be flexible and hence dangerous.

An important advantage of the skewed cutting edge is that this skewness provides a clearance angle for making certain cuts. When the tool is correctly shaped and sharpened, you can make the finishing cut on a shoulder, for instance, without the skew digging in. Set the skew's long edge flat on the

Fig. 1: The geometry of a skew chisel

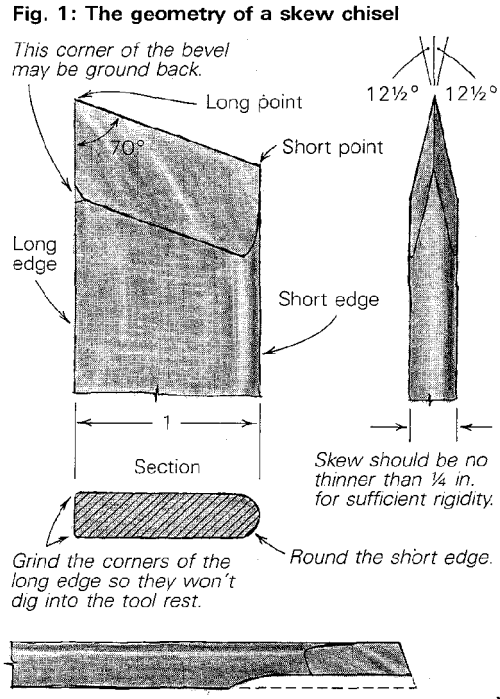

Fig. 2: Squaring a shoulder using the long point

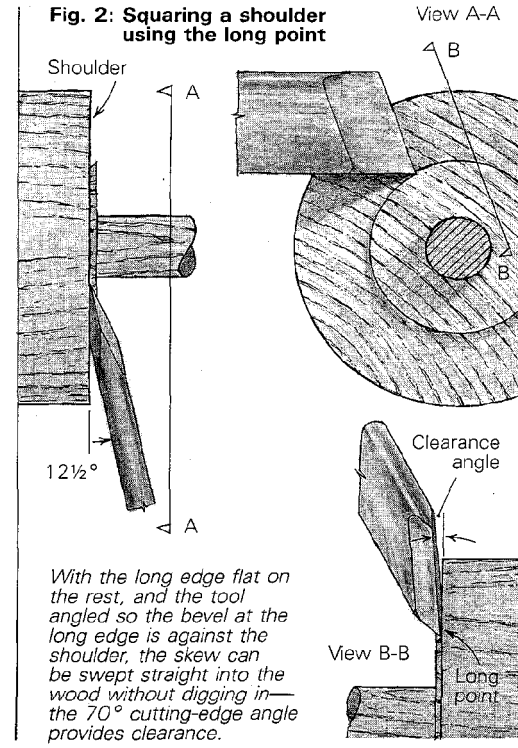

With the long edge flat on the rest, and the tool angled so the bevel at the long edge is against the shoulder, the skew can be swept straight into the wood without digging in—the 70° cutting-edge angle provides clearance.

Fig. 3: Offset skew

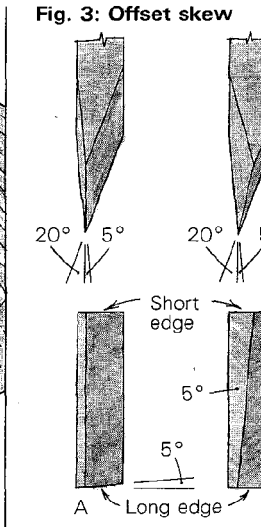

For certain cuts, like parting off close to the headstock, an offset edge positions the tool more conveniently. Offset the edge by grinding bevels at different angles. To provide an adequate clearance angle, either grind the long edge at a 5° angle (A), or grind the cutting edge at a 5° angle to the section of the tool (B).

tool rest with the left-hand bevel at right angles to the lathe axis (figure 2), and push the skew straight in—the clearance angle makes the cut both easy and safe. Good turning is based upon confidence which is, in turn, based upon your tool's being predictable. The clearance angle is only about 5°, and hence if the tool is incorrectly shaped or sharpened the clearance angle may be larger on one side and smaller on the other, and predictability is lost.

In use, a side or an edge of the skew must always be in contact with the tool rest. To facilitate smooth movements over the rest, it helps to grind the short edge of the skew slightly convex, and to round the corners of the long edge. The tool rest and the sides of the tool should be smooth.

Sharpening—An angle of skewness of about 70° is the optimum compromise between retaining a strong long point and providing an adequate clearance angle. When grinding, hold the cutting edge parallel to the grinding wheel axis, the bevel flat on the wheel, and aim for an angle on each bevel of about 12½°, as shown in figure 1. I find that this sharpening angle works well on all woods, even our native Australian hardwoods (some of which are very hard indeed). The optimum diameter of the grindstone is 8 in. to 10 in. If smaller, excessive hollow grinding weakens the cutting edge; if larger, the bevel will be rather flat, which makes both grinding and honing more difficult. The grit and composition of the wheel depend on the type of steel. For my high-speed steel tools, I use a Norton 19A 60KVBE. Take care to keep the two bevels the same length, so that the cutting edge, when looked at head-on, is centered and parallel to the sides. Then the clearance angle will be the same on both sides.

There are two misconceptions about sharpening: that the bevel need not be hollow-ground, and that honing is not required after grinding. The bevels need to be hollow-ground so that there is a straight line of sight along the bevel. The turner can then sight along the true cutting edge, the microsharpened bevel, when making cuts with the long point. Although gouges are more easily honed by moving the stone over the tool, I prefer to use a fixed stone for the skew. Try a shallow tray holding a fine-grade 6-in. by 2-in. oilstone immersed in kerosene, plus the slips for the gouges, mounted adjacent to the lathe and covered with a lid. Hone the skew with short to-and-fro strokes, and with both the heel and the toe of the bevel bearing on the stone. After both bevels have been honed, any burr can be stropped off.

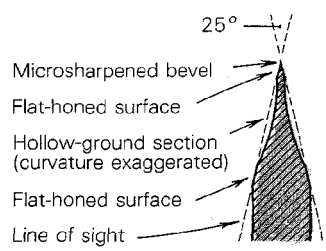

Some turners do not hone, perhaps because the ragged edge straight from the grindstone gives an illusion of sharpness. An unhoned edge, however, scratches the wood surface and does not last. In addition, it is far quicker to rehone than to regrind, and your tools will last much longer.

A convex bevel is occasionally recommended in the belief that it polishes the cut surface. Actually, the texture of the wood contacted by the bevel is little affected by bevel shape, and the loss of the clear line of sight is a disadvantage.

Steel—Almost all ready-made turning tools are carbon tool steel, as it is easier for the manufacturers to fabricate. Here, in Australia, professionals usually use high-speed steel—it takes a finer edge, is more resistant to abrasion and does not lose its temper as readily as carbon tool steel does. It is especially recommended for the skew chisel with its exposed long point, which overheats easily. The amateur can change to high-speed steel by making his own long-and-strong skews. Hardened and tempered rectangular tool bits about 1 ft. long need only to have the bevels and tang ground by the turner himself. Of the vast range of tool steels available, American Iron & Steel Institute classifications T1 and M1 are best, being the least brittle of the true high-speed steels. Sears sells high-speed steel turning tools at a reasonable price, but the blades are shorter than I like.

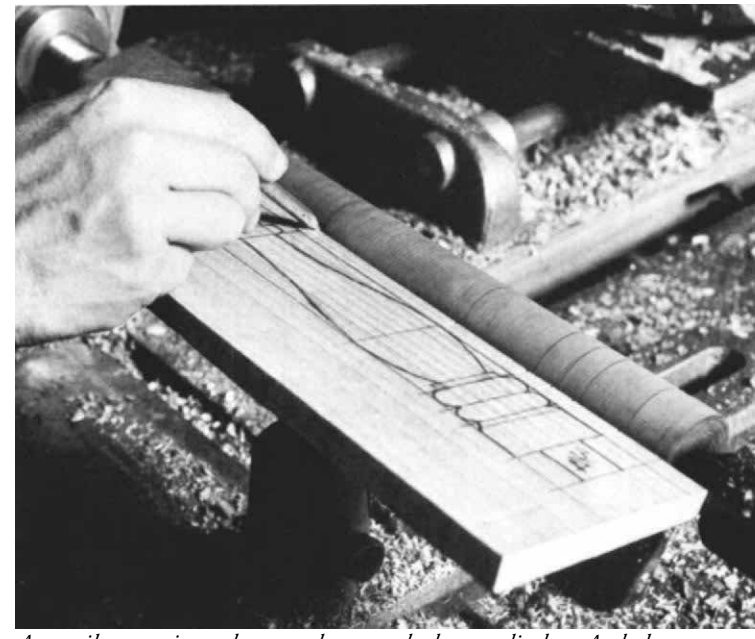

A pencil gauge is used to mark a roughed-out cylinder. A shallow groove in the plywood supports the pencil point, allowing the turner to precisely transfer marks to the spinning work.

Handles—The skew should be worked with a sensitive touch, not brute force. On spindle turning the skew will usually be used for most of the turning time, and it will go through many complex movements. For good balance and leverage, the overall length should be about 18 in., and the handle should be light and fairly short rather than long and heavy. It's less tiring and gives better balance when you use the tool one-handed. My 12-in. tool blanks allow me to make long-and-strong tools with a 9-in. blade showing and a 9-in. handle. Although a rack of tools with matched handles looks very smart, having them all different, both in shape and wood, helps you find one fast when you want it.

Laying out the cuts—Where a few identical items are to be turned, I begin each with a roughing gouge (*FWW* #12, pp. 60-64) to remove the bulk of the wood. A truly sharp one will leave the surface ready for marking out and detailed turning. Then I use a pencil gauge, as in the photo above. The gauge is ¼ in. to ½ in. thick, about 3 in. wide, and usually about 1 in. longer than the work. Draw the pattern full-size on the gauge, and project the main reference points to the edge. File short grooves where the lines meet the edge of the gauge. To mark out, rest the gauge on the tool rest

with its top edge lightly touching the rotating wood, and hold a pencil point against the turning at the grooves.

A conventional turning has several features, as shown in figure 4. A bead, an approximately semicircular convex curve, frequently ends at a short fillet forming a break between the bottom of the bead and a cove. A bead turned on a long curve is called a ring. Some spindle turning requires only a roughing gouge, a skew and a detail gouge, each being used only once during the process. Here are some of the cuts that can be made with the skew, roughly in the order in which they might be used.

V-cuts—To turn a bead, there must be clearance for the skew to move into and for the shavings to escape. The V-cut, with the skew resting on its long edge, is the first clearing cut. It spears into the wood, leading with the long point. To begin cutting a bead, three V-cuts are usually necessary. For the first, hold the tool at right angles to the lathe axis, with its long edge on the tool rest, and position the long point above the mark for the outer edge of the bead. Raise the handle so the point sweeps down into the wood. This initial cut is admittedly crude—the skew's tip crushes the wood on each side of the bevel, resulting in considerable friction and heat. There is little metal at the long point, so heat is only slowly conducted away into the body of the blade. Too heavy and sustained a pressure will create temperatures at the tool tip that are high enough to soften carbon steel. The two succeeding V-cuts widen and, where necessary, deepen the groove. Move the skew a little to the side of the first cut. Swing and rotate the handle so that the cutting edge points at the bottom of the first cut. Then raise the handle so that the long point sweeps down in an arc until it reaches the bottom of the first cut, as shown in the photo, bottom left. The process can be repeated, deepening and widening the V until sufficient depth is reached.

Fig. 4: A typical turning

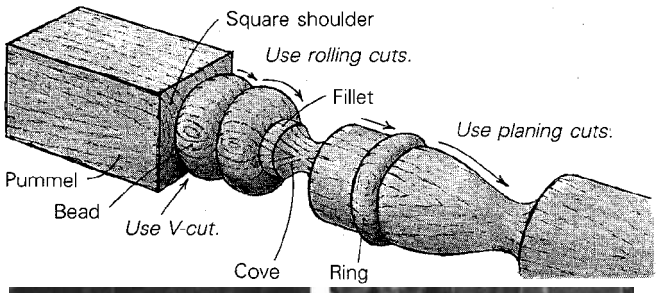

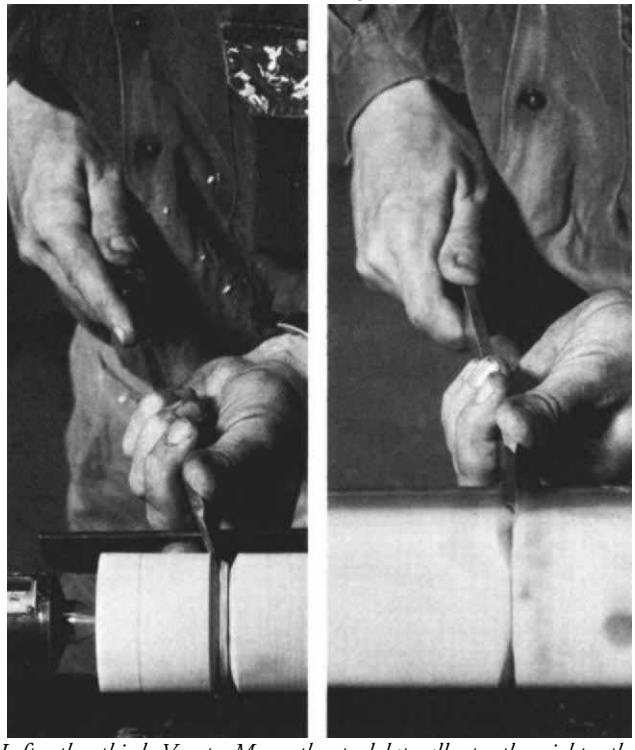

Left, the third V-cut: Move the tool laterally to the right, then swing and rotate the handle so the cutting edge points along the intended line of cut. Sweep the point down to make the cut. To leave a pummel (right), cut the shoulder before the stock is roughed out. Make a series of V-cuts to achieve enough depth, then align the bevel at the skew's long point with the shoulder. With the long edge flat on the rest, arc the skew into the work, taking a light cut. The skew's built-in clearance angle makes the cut safe and easy.

To leave a square, or pummel, on a turned piece, the procedure is similar, although the V-cutting precedes roughing. Obviously, because of the greater depth of wood at the corners, more than three V-cuts are usually required. Make alternate perpendicular and sloping cuts until the shoulder is deep enough. These initial V-cuts leave a rough surface, so a final, light V-cut should be taken down the face of the square to the full finished depth. At the long point itself, the bevel facing the square should be at right angles to the lathe axis, which requires that you swing the handle slightly, as shown in the photo, bottom right. As long as the long edge is flat on the tool rest, you will come to no harm.

In cutting a bead, V-cuts define both the bead's lateral extent and, more important, its depth. After the V-cuts have angled in to clear room, the short point can make a series of rolling cuts to shape the curve. On stock of the size in the photos on the facing page, cutting each side of a bead usually requires three V-cuts followed by at least two rolling cuts.

Rolling cuts—In bead-cutting, use the very end of the cutting edge at the short point. The cut starts with the skew almost flat on its side. Hence to start a rolling cut, the handle must be rotated to tilt the cutting edge slightly so only the short point cuts. Also, the handle must be angled slightly behind the cut so that the cutting edge, not the short edge, is presented to the wood, as shown in the top photo and the bottom left photo on the facing page. Then, as shown in the middle photo, simultaneously rotate the short point to take a deeper cut, and—to keep the cutting edge in the work—move it around the side of the bead and vertically downward. It is often necessary to slide the blade along the rest. This involves quite large movements of the handle, swinging through a wide lateral arc and rising steadily, in order to keep the bevel rubbing and the short point cutting.

The underhand turning grip, visible in the photo at the top of the next page, makes control easier than conventional overhand grips. In this grip, which is widely used in Australia, the forefinger of the left hand extends under the tool rest and is used to steady the hand and power the tool. Left hand, tool and tool rest are tied together and can act as a unit. Provided that there is a gap of at least ½ in. between the work and the tool rest, the finger is safe.

To achieve a full semicircular bead at the end of the rolling cut, the skew has to cut perpendicularly to the lathe axis. Unfortunately, the clearance angle—of such assistance when

To begin a full rolling cut with the short point, start at the top of the bead with the skew almost on its side. Angle the handle slightly behind the cut to keep the cutting edge, not the short edge, in contact with the wood. When making rolling cuts, Darlow uses the Australian underhand grip, his forefinger gripping the back of the tool rest for better control.

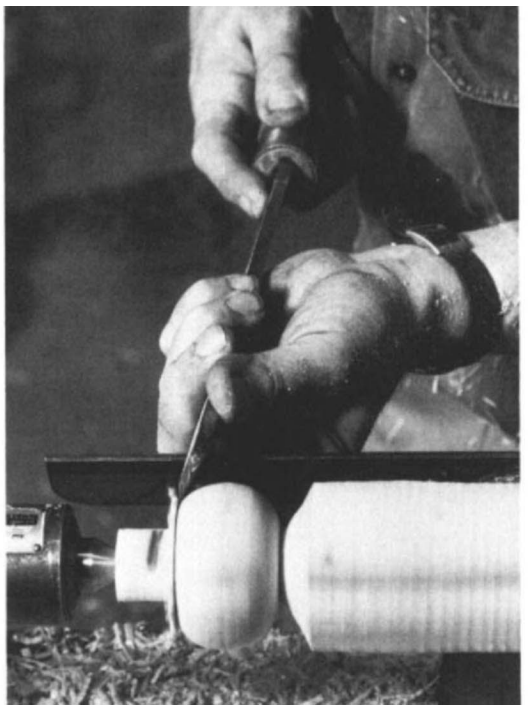

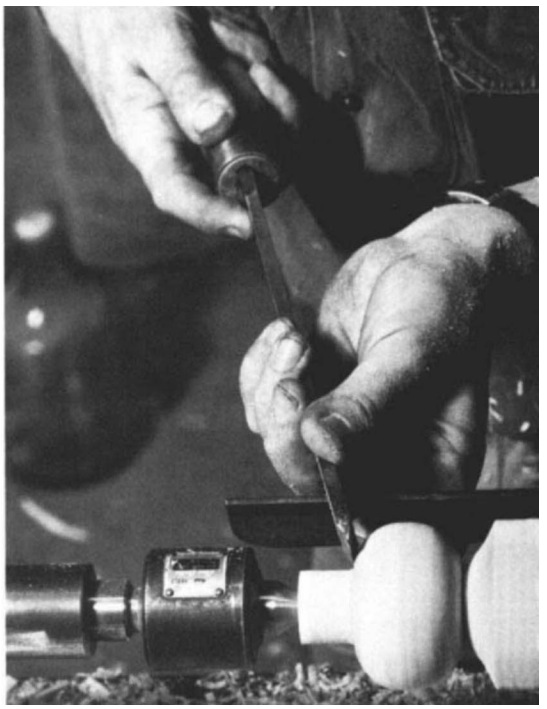

Almost flat on its side, the short point begins to cut (left). Move the skew laterally along the tool rest to continue (center), rotating the handle to keep the overhanging cutting edge clear. Keep your elbows near your body for better control, swinging your body to pivot the skew on the tool rest. Raise the handle and move the cutting edge down into the work to keep the short point cutting. At the completion of the cut (right), the handle is rising and moving forward—Darlow has swung it far to the right with his body and rotated it so that the cutting edge, beyond the vertical, can form the side of the bead perpendicular to the work.

you are using the long point—becomes an interference angle when you are using the short point. Therefore, at the end of the cut the handle must be rotated so the blade tilts about 5° away from the cut, as shown in the photo at far right. This is why it helps to round the short edge of the skew, so that there is no sudden change in the cutting edge's relationship to the work when you transfer from one fulcrum to the other.

There are three main problems when making rolling cuts. First, if you fail to rotate the handle enough as you move around the bead, the overhanging part of the cutting edge will bite into the part of the bead you have just cut. This causes the working length of the cutting edge to increase suddenly from virtually nil to up to perhaps ¼ in. The cutting force increases almost instantaneously. Human reaction time is too slow to keep control of the tool, and it is shoved back, riding up and out of the bead. Second, if you inadvertently take too thick a shaving—by raising the handle too far, swinging it too soon around the bead or rotating it excessively—the strong shaving formed outside the short point will force the cutting tip farther into the side of the bead, ruining the shape. Third, if you persist in using a dull tool, it will not be able to penetrate the wood at the correct working angle—the tool will ride on top, compressing and glazing the surface, and making penetration even more difficult. When you try to get below the burnished surface, the tool will dig in. There is no cure except to sharpen your skew.

Rolling cuts are the main cause for the skew's notoriety. They require simultaneous lateral, vertical and rotational movements of the cutting point, plus lateral movement of the blade along the rest to make smooth curves without digging in. Needless to say, they need to be taken slowly, and they require considerable practice so that they become almost automatic. A bead of about ½-in. diameter is a good size to practice. It rolls naturally without the necessity of moving the skew laterally along the rest, although the handle still rises and swings through its broad arc, and the tool must be guid-

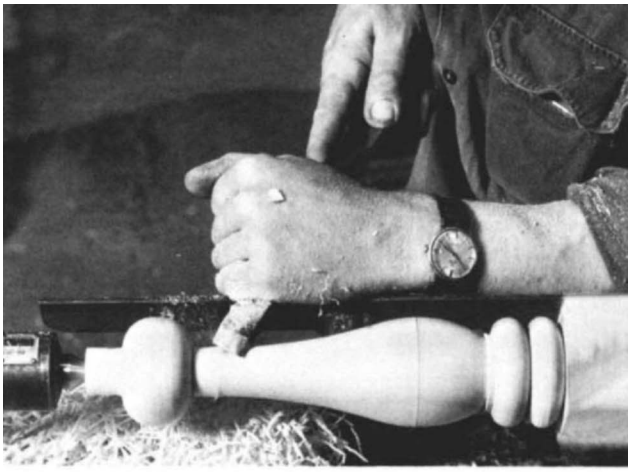

The planing cut, with the bevel rubbing the work to support the cutting edge, leaves a smooth, polished surface, Darlow guides the skew with his thumb while his left hand dampens vibration in slender stock, above. Generally, as shown at top right, neither the short point nor the long point should contact the work. The bottom right photo shows a modification; the slide cut, a planing cut that gradually leads up to using the extreme short point to cut the end of a curve without marring the side of a bead. As in all turning where most of the tool movement is horizontal, the conventional overhand grip is used.

ed forward over its pivot point on the rest. Larger sizes, with full rolling cuts, are less automatic and more difficult to learn. Many turners favor several short, overlapping rolling cuts, with the sideways movements in between.

When practicing, do not attempt too much at once and do not practice when you are tired or when things begin to go badly. Take a rest to restore your concentration. Don't use too large a square at first, 2 in. to 3 in. is about right. Use a gouge to clean up any scars on the work before proceeding or you may dig in again in the same place.

In the series of rolling cuts necessary to complete a bead, you are aiming for a constant shaving thickness. The cuts should be taken slowly and purposefully so that all the varying movements can be coordinated. There is also the problem of whether to watch the skew's cutting tip or the evolving bead profile. Obviously it is best to watch both simultaneously, but for those without Eddie Cantor's optical facility, watch the tip initially, and once the cut is started, switch to the profile. When you are comfortable making full rolling cuts with the short point, you will have few problems with the rest of the skew's repertoire. Here are some tips on the other cuts.

Long-point cuts—Most beads can be cut with either the long or the short point. The short point works better. It cuts down into the wood, thus burnishing the surface, whereas the long point lifts the ends of the wood fibers, so an inferior, almost porous surface is left. In addition, because the micro-sharpened bevel at the short point is supported by the work, there is less tendency for a jerky rolling action than when you are using the relatively unsupported long point. But do use the long point for very small beads, where the greater visibility helps. Ideally, you should execute the cut the same as you would with the short point, starting with the skew on its side and rotating the cutting edge through a full 90° until the blade rests on its long edge.

Where you cannot lay the blade on its side to start the rolling cut—as on the far side of a bead adjacent to a square section, where the corners of the square would hit the skew—you can use the long point, held more vertically, to make a series of rounded V-cuts to define the bead. Alternatively, and this means a time-consuming tool change, a very small skew or a nosed gouge could be used for a better surface.

When similar beads are adjacent, it is not possible to rotate the skew far enough to make the bead bottoms truly vertical. Cut as close to vertical as you can, until the skew begins to bind, then reach in with the long point to cut out any rags left in the cusp.

Cutting fillets—After completing the shape of the bead, and clearing some room, cut the fillet using the short point. As with the start of a rolling cut, angle the handle away slightly to present the short point of the cutting edge to the wood. It is easiest to keep the tool at one point on the tool rest, and to swing the handle so the cutting point levels the fillet. Don't contact, and hence spoil, the side of the bead above the fillet. Normally, fillets are cut parallel to the lathe's axis, although where room is constricted they are often sloped to avoid having to switch to a narrow skew.

Planing cuts—The planing cut, shown in the photos above, is a finishing cut that leaves curved and straight sections smooth and even. It consists of mostly lateral motion of the

skew along the tool rest. The planing cut is made with the short point leading, the supporting bevel almost tangential to the surface, and the cut always moving level or downhill. The cutting edge usually works at about 45° to the lathe axis, giving both a cutting and a riving action. The full length of the cutting edge can be used, with the exception of the long and short points themselves. The larger the diameter of the work, the larger the skew that should be used, in order to keep the points safely away from the work. If the long point becomes buried, the shaving is cut only on its near side. The shaving thus offers more resistance, and pushes the long point down into the wood, resulting in a deep tear. If only the short point is cutting, the action becomes purely riving, and splinters, not shavings, will result.

Sensitive control, which is one of the joys of using the skew, is accomplished by slightly varying the presentation of the tool to the work. The movements, in various combinations, become so ingrained that they seem instinctive: To take a deeper cut, merely raise the handle. To increase the downhill gradient of the cut, slightly steepen the angle of the cutting edge by rotating the handle. Raising the tool rest for the planing cut is unnecessary and time-consuming. Simply lower the handle so that the tool is presented with the bevel supporting the cutting edge.

If you are planing thin work and encounter vibration that causes your skew to chatter, it is perfectly safe to support the work with your left hand as it turns. The photo at the left on the facing page shows me steadying a turning while I guide the skew along the cylinder with my thumb. Your left hand can also feel how successful the steadying is—if you've got it right, the turning will feel smooth.

The riving component of the cutting action causes tear-out on interlocked or non-axially grained wood unless the cuts happen to be fairly steeply downward. To minimize tearing out, angle the handle back behind the direction of travel so that the cutting edge is more nearly square—say, about 70°—to the lathe axis.

If you are doing work where the corner of the bevel at the long edge digs into the finished surface, you can grind the offending corner away, as shown in figure 1, or tilt the skew more steeply so the corner clears the work.

Where a long curve meets a ring or similar projection, modify the planing cut into what could be christened the slide cut. As you approach the projection with the skew planing, gradually slide the tool forward so that the short point itself cuts, as in the lower right photo on the facing page.

Planing cuts can define convex and concave profiles, as well as straight ones. Hollows with a surprisingly small radius can be cut with a skew, using a modified planing cut and firm control. The lower middle section of the cutting edge is used and the angle of the tool is somewhat steeper than the tangent at the point on the hollow being cut. With large work, control is difficult because the bevel is not supported, but with practice the technique will be found risk-free and safe. Use a small skew on work less than 1 in. in diameter. Always cut down toward the bottom of the cove from both sides—don't try to cut uphill.

Parting cuts—You can make V-cuts one-handed with the long point for parting off, which frees your other hand to steady and catch the finished turning. Slacken the tailstock a little toward the end of the cut so that the work will come away freely. Don't part off work too large to control or turnings with square sections at the left-hand end.

The skew can quickly remove waste. Keep the bevel rubbing, and the edge moving forward, as the diameter goes down. A firm grip is necessary.

If you do much parting off from a chuck, you will want to be able to part off close to its face, which should be covered by a guard. The offset skew (figure 3) allows this, with its 5° right-hand bevel.

The skew can also set diameters and remove waste. Hold the cutting edge parallel to the lathe axis with the lower bevel rubbing, as in the photo above. The action is identical to that of the conventional parting tool—which should slice rather than scrape—except that the skew will tend to move sideways in the direction of its long point. You cannot make this cut, of course, unless there is clearance for the short edge of the tool. If holding the skew with only the right hand (the left hand holding the caliper), brace the handle beneath your forearm, extend your forefinger down the tool for firmness, and don't use a skew wider than ½ in.

Steering the skew—The right hand provides most of the power and steering. When doing a series of cuts with a particular tool, it is natural to regrip for each cut so that the right hand is comfortable during that cut. For rolling cuts, howevet, it is best to grip the tool so that the right hand reaches the natural, comfortable position at the completion of the cut. This makes the cut almost automatic because the right hand wants to return to an unstrained position.

Extending the forefinger, as I usually do, is a way of getting a more precise feel of the tool, as well as of adding firmness when needed. For control and balance, keep your right arm close to your side.

With any human activity, practice of the correct techniques, while perhaps not making perfect, at least makes much better. Unfortunately, new techniques tend to feel unnatural, so keep on turning and be prepared for things to get worse before they get better. □

Mike Darlow, 38, keeps four lathes busy turning lace bobbins, restorations, production work, bowls and gallery pieces in Chippendale, N.S.W., Australia. Photos by Peter Johnson, Sydney.