Using the Tablesaw

Some basic rules for safe, accurate results

by Ian J. Kirby

Ripping is the tablesaw's forte, but it's a versatile machine, used for dimensioning wood as well as for cutting joints. The tablesaw is so simple and universal that it is frequently used without the operator's ever having taken the time to learn its common-sense fundamentals. In most small shops the tablesaw usually has improper guards and an inadequate rip fence. In the interest of keeping fingers attached to hands, a review of tablesaw basics may be of value.

The ordinary tablesaw is nothing more than a steel table with a circular blade projecting through its surface. The blade projection is adjustable for cutting wood of varying thicknesses. The blade can be fixed perpendicular to the table, or it can be tilted for cutting wood at an angle.

For safety's sake, tablesaws need a blade guard, though even the best guard can't keep fingers out of the blade. A guard should serve as a visual reference to the blade's location, warning the sawyer of the danger zone—any point within 9 in. of the blade. The best guard is mounted on an arm suspended above the blade. The guard should not be attached to the riving knife or splitter, and it should be adjustable, set as close as possible over the stock being sawn. There are several variations of this mounting method and any guard is better than no guard.

The machine's electrical power switch should be easy to reach, mounted on the saw cabinet just under the table or on a nearby wall or post. When switching on, place one finger on the start button and a second on the stop button. This allows for a quick shutoff if something goes wrong. A foot-activated switch allows the sawyer to control the wood with both hands while operating the switch. Many saws have mechanical or electrical brakes that stop the blade quickly when the switch is turned off. In the absence of a brake, use two push sticks—one rubbing each side of the blade—to stop its coasting. When changing rip-fence settings never stick a tape or rule between a moving blade and the fence. Wait until the blade has completely stopped. The saw depth of cut should be set so the blade protrudes about ½ in. out of the workpiece. Carbide-tipped blades should be adjusted so the entire tooth projects above the wood during the cut. A 10-in. saw should be operated at 3,000 to 3,500 RPM at the arbor, or at a speed that runs the blade's periphery at 10,000 feet per minute.

Noise can be a major barrier to safe machine operation. The racket muddles thought and can force the operator to adopt timid and unsafe working practices. So ear protection—as well as goggles—should always be worn when using the saw. To concentrate without the distraction, the novice woodworker can develop safe habits by practicing moving wood past the blade with the machine switched off.

Ian J. Kirby is a consulting editor to this magazine. He teaches woodworking and design in North Bennington, Vt. Drawings by the author.

Fig. 1: Stance

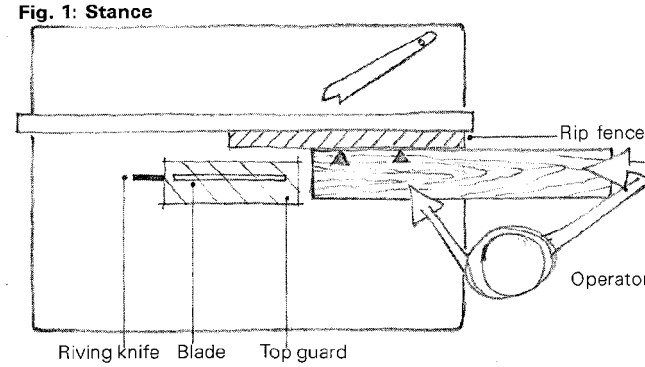

Stand to one side of the blade when ripping. Hold the work against the fence with the left hand, feed with the right.

Fig. 2: Guard, knife and fence

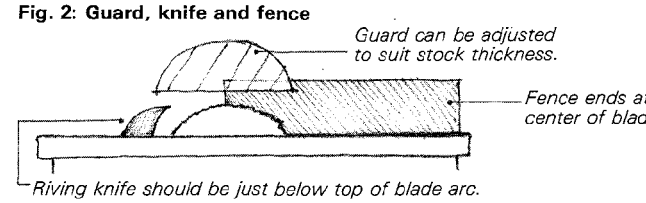

Proper stance is also important to safe tablesaw operation. When ripping or crosscutting, the operator should stand with his weight equally distributed on both feet. Stand to one side of the sawblade to stay out of harm's way and to have a better view of the cut. Figure 1 shows a good position—during ripping, kickbacks can be hurled from the saw like spears and you could be skewered.

Because the tablesaw is at its best when used for ripping, the rip fence is its most vital attachment. The fence should be mounted parallel to the blade. Whether it's used on the right or left side of the blade is the preference of the operator. Virtually all of the tablesaws sold in the United States have rip fences extending the full length of the saw table. This fence forces the wood to remain in contact with the back of the blade during the rip, thus inviting binding, burning and kickbacks, particularly when cutting refractory wood. The fence should end at the front of the blade, just where the cut is completed. This allows both pieces to move clear of the blade for safer, cleaner results. The quickest fix for tablesaws equipped with a full length fence is to fit them with a board ending at the center of the blade, as in figure 2. Actually, it's good practice to mount a board on the steel fence of any machine. This will prevent damage if the blade accidentally touches the fence.

To keep the kerf from closing up and pinching the blade during ripping, tablesaws should have a riving knife or splitter mounted in line with and just beyond the back of the blade. The knife is a fin-shaped piece of steel, tapered in sec-

Fig. 3: Ripping

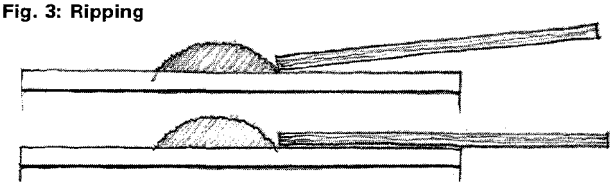

Feed the stock angled to the rear or flat against the table, above.

Never start the cut with the front of the board elevated, below.

Fig. 4: Push stick

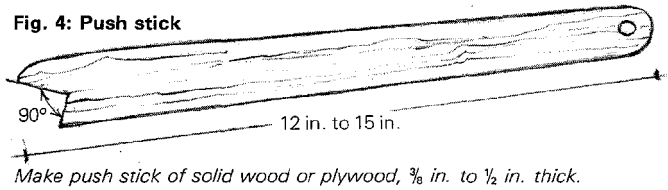

Make push stick of solid wood or plywood, ⅜ in. to ½ in. thick.

Fig. 5: Crosscutting

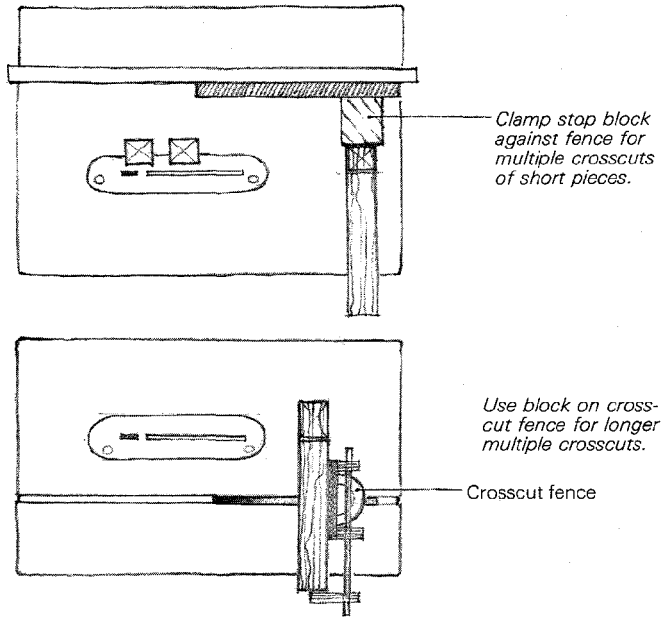

Fig. 6: Miters

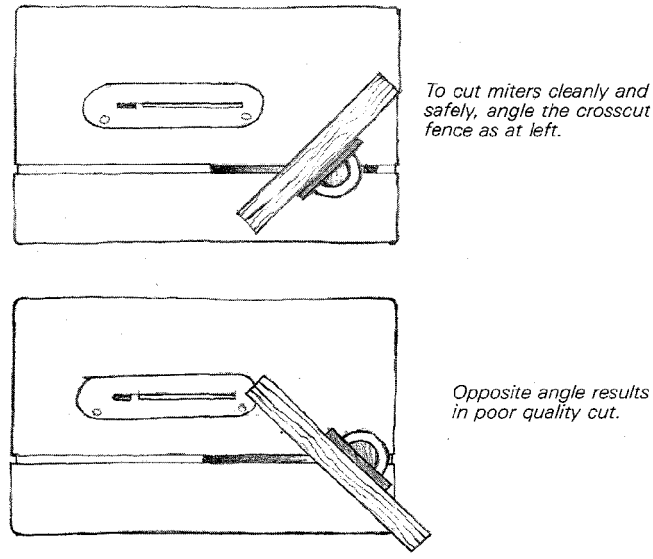

tion and as thick at its back edge as the kerf is wide. It should be permanently mounted at a height just below the top of the blade's arc, as in figure 2. The knife should maintain this relationship to the blade for every cutting depth. Some saws, particularly the cheaper variety, have no riving knife at all, but the payback in safety and improved cutting makes it worth the effort to install one.

When ripping, the wood should be offered to the blade very gently at first, especially when using carbide-tipped sawblades, whose teeth are brittle and can break under heavy impacts. Feed the board into the saw flat against the sawtable or angled as in figure 3. Never touch the board to the blade with its front end tilted above the table, or the blade will grab the stock and slam it to the table. Make sure a push stick is handy before starting any cut; keep one on the sawtable on the opposite side of the fence. Figure 4 shows a simple push stick design. Keep plenty of sticks around—their absence is no excuse for a missing finger. With the cut started, hold the wood against the fence with your left hand (if the fence is to the right of the blade), while feeding the stock into the blade with your right hand. As the rip progresses, make sure you hold the board firmly against the fence. Keep your eye on the contact point between board and fence—some wood may tend to run away from the fence during the cut. Feed into the saw at an even rate. If fed too slowly, the blade will burn in the kerf, while too quick a feed will stall the saw. Never move your left hand beyond the leading edge of the blade. This is unsafe and merely pushes the waste to the blade, not the stock to the fence. As the cut nears its end, remove your left hand from the wood and use a push stick to complete the rip.

If the saw stalls during a rip, withdraw the wood quickly, or turn off the saw immediately—a good reason to have a foot-operated switch. It isn't advisable to rip warped or twisted boards, but when you must, crosscut the stock into the shortest lengths possible, and then rip with the concave side of the board up, so the wood is level with the table as it meets the blade. Rip a cupped board as close to its center as possible and exert even pressure, to minimize rocking during the cut. Long boards or large panels should be cut with the help of a second person, or use a table or roller on the saw's off-feed side for support. The sawyer's helper should clearly understand that his job is only to support the stock (keeping it level with the table and parallel to the blade) as it comes off the saw and not to pull it through—he could pull the sawyer's hands into the blade. When the cut is complete, the takeoff man then takes control of both pieces.

Wood is crosscut on the tablesaw with the miter gauge or crosscut fence. This angle-adjustable attachment usually runs in grooves milled in the table surface parallel to the blade. The fence must slide smoothly in the grooves. A board about 12 in. in length can be attached to the crosscut fence to offer more support to the stock. Crosscut fences are sometimes equipped with clamps to stop the work from slewing as it is fed through the blade.

Crosscutting should be done from the same stance as ripping. To test 90° crosscuts, cut a test piece and check it with a square rather than attempting to square the blade directly to the crosscut fence. With the crosscut fence set, hold the stock firmly against it while advancing the wood evenly into the blade. Only practice will reveal the best way to grip the stock against the fence. When the cut is complete, move the crosscut fence beyond the back edge of the blade or back to the

starting point. To avoid binding the stock against the blade, slide the wood slightly away from the blade as the crosscut fence is returned. Small stock may have to be clamped to the crosscut fence to be crosscut safely. To crosscut many parts to the same length, clamp a stopping block to the rip fence ahead of the blade as in figure 5, or attach a stop block to the crosscut fence. Never bring the rip fence over to stop the length of a crosscut, as the cut piece is liable to lodge between the fence and the blade, and bind or kick back.

For 45° miters make a test cut to set the crosscut fence accurately. Grip the stock firmly and feed it into the saw as shown in figure 6, the blade shearing with the grain. Because of the fibrous nature of wood, mitering it from the opposite direction results in a cut of lesser quality. □

Choosing a blade

Which blade for which cut? That's the first problem the woodworker faces when using the tablesaw. You want to rip and crosscut, leaving smooth, tear-out-free edges on solid wood or plywood. No blade does everything well. Many types of blades are available but you need only a few to start out.

There are two categories of readily available sawblades: those made of high-speed steel and those of steel with tungsten-carbide tips brazed on to form the teeth. New high-speed steel blades are inexpensive and although they dull quickly, you can easily resharpen them yourself. For information on sharpening, see *FWW* #10, p. 80. Carbide blades cost more and cut smoother, but you must send them out for sharpening, which is expensive. You have to weigh cost against use—carbide blades are preferred for repeated high-quality cuts.

High-speed steel blades—There are three basic types of steel blade: rip, crosscut and combination. These blades can have spring-set or hollow-ground teeth. Teeth on most steel blades are ground in the same way—with the tops of the teeth alternately beveled, and the fronts left flat or beveled. Set—the alternate and uniform bending of teeth to the right and left—creates clearance for the blade during cutting. This keeps the blade cool and prevents binding and burning. For ripping heavy wood to rough dimensions use a hefty high-speed steel rip blade (figure 1) with a lot of set and 20 to 40 teeth. The thicker the wood, the fewer the teeth. This blade will produce a quick but fairly rough cut with little binding or burning. Rough crosscutting can be done with a steel crosscut blade with 40 to 60 teeth (figure 2), but a combination blade (figure 3) will do the job just as well. Combination blades, designed to rip and crosscut, are a good value for the money. They have four alternating front-beveled teeth followed by a flat or raker tooth with a deep gullet to clear sawdust quickly and prevent overheating. Properly sharpened and set, a combination blade will work well for most general purpose work.

The hollow-ground combination blade (figure 4) tends to be a smoother cutting blade than the spring-set. This blade has about the same number of teeth as the combination, but its teeth have no set. The body of the blade below the gullets is ground thinner than the teeth so the saw won't bind. Tolerances for a hollow-ground blade are small—it must be accurately cut and sharpened to work well, otherwise it will bind and burn.

Tungsten-carbide blades—Plywood, particleboard and solid wood impose different loads on a sawblade. Carbide blades are better for plywood and particleboard. For a given type of blade, sharp carbide almost always produces a smoother cut than sharp steel, and because it is harder, carbide stays sharper longer than steel does. Carbide blades don't have set, and usually the tops rather than the fronts of the teeth are ground. A good general purpose carbide combination blade for solid wood and man-made boards (figure 5) should have between 40 and 60 teeth ground in a series of four alternately top-beveled teeth, followed by a flat or raker tooth. If you can afford only one carbide blade, this is the type to buy.

For ripping only, a 24-tooth carbide blade with flat-ground teeth (figure 6) is excellent. If you need to cut plastic sheets or laminates, choose a 50 to 70-tooth carbide blade that has alternating triple-beveled teeth with a raker tooth in between (figure 7). Properly sharpened and maintained, all carbide blades leave a smooth, almost finished surface. For more information on saws and blades see *FWW*#23, pp. 72-75 and #24. pp. 48 and 49. —*I.J.K.*

High-speed steel blades

Fig. 1: Rip blade

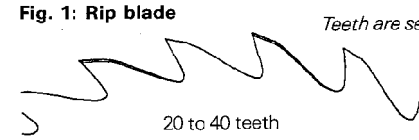

File teeth faces perpendicular to blade.

Fig. 2: Crosscut blade

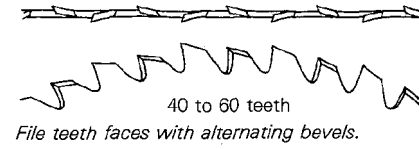

File teeth faces with alternating bevels.

Fig. 3: Combination blade

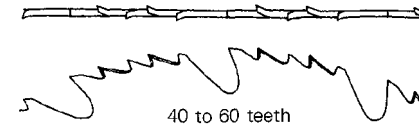

Raker tooth, with deep gullet, clears chips.

Fig. 4: Hollow-ground combination

Blade body below teeth is ground thinner (here exaggerated). Teeth have no set.

Carbide-tipped blades

Fig. 5: Carbide combination

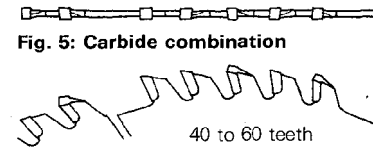

Four alternating top-beveled teeth are preceded by flat-ground, raker tooth.

Fig. 6: Carbide rip

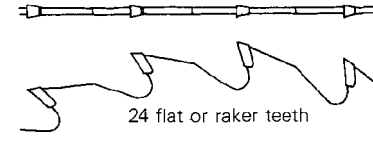

Fig. 7: Carbide triple-chip

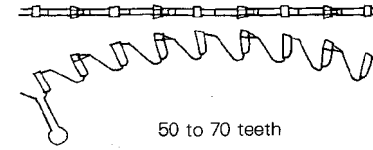

Triple-chip tooth alternates with raker tooth.