The Frame and Panel

Ancient system still offers infinite possibilities

by Ian J. Kirby

Scarcely another system in the whole range of woodworking has more variation and broader application than the frame and panel. In the frame-and-panel system, pieces of solid wood are joined together into a structure whose overall dimensions do not change. The frame is usually rectangular, mortised and tenoned together, with a groove cut into its inside edge. The panel fits into this groove: tightly on its ends since wood does not move much in length, but with room to spare on the sides because wood moves most in width (figure 1). Wood is not uniform and as it moves in response to changing moisture conditions, it cups, twists, springs and bows. Trapping the panel in the groove inhibits this misbehavior.

Historically, the basic technique that made possible the frame and panel is the mortise-and-tenon joint, on which I have already written extensively. The frame and panel is a basic unit of structure. It can be used singly (a cabinet door) or in combination (to make walls, entry doors, cabinets). The several elements of a single frame and panel may be varied almost without limit, and its aesthetic possibilities are infinite. The little choices made during its manufacture are aesthetic choices, and we can begin to see the interdependence of design and technique. Neither the frame-and-panel system nor its joinery can be thought of as an end in itself. Neither has any importance except in application, toward the end of making a whole thing out of wood.

To overcome the panel's tendency to distort, we make it as thin as the job will allow, while we make the frame relatively thick. By doing this we haven't significantly altered the amount by which the panel will shrink and expand, but we have rendered it weaker so that the frame has a better chance of holding it flat. Panels can be made as thin as 3/16 in. but such panels were uncommon before the 19th century because woodworking tools were not readily capable of such refinement. The thickness of the panel was dealt with in a number of ways, the most usual being to raise and field it.

Generally raising and fielding are thought to be the same thing—the process of cutting a shoulder and a bevel on the edges of the panel and thereby elevating the field—that is, the central surface of the panel. I'd like to distinguish between these two terms. Fielding refers to any method of delineating the field of the panel from the frame; raising means cutting a vertical shoulder around the field, which may or may not be accompanied by a bevel.

Given this system for maintaining panel size and shape against the hygroscopic movement of wood, woodworkers in the past found that the system's elements could be varied to produce different aesthetic results in terms of form, color, texture, pattern value, proportion of parts, highlight and shadow (figure 2). By carving the panel, we imprint upon it richness and grandeur. By inlaying it, we make it into a vehicle for the decorative use of other materials, and by using moldings of different profiles, we change the various propor-

Fig. 1: Section through frame and panel

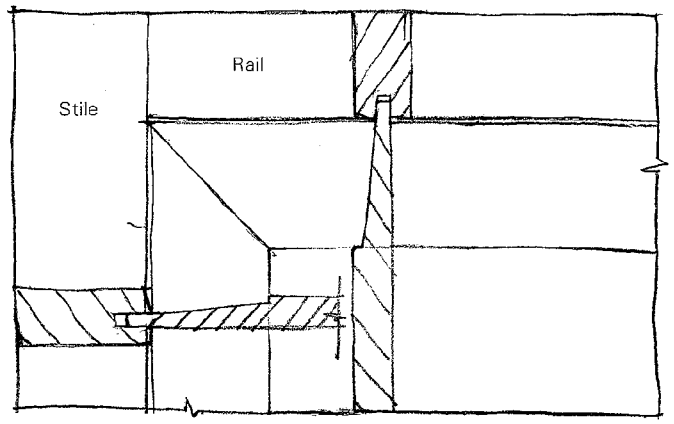

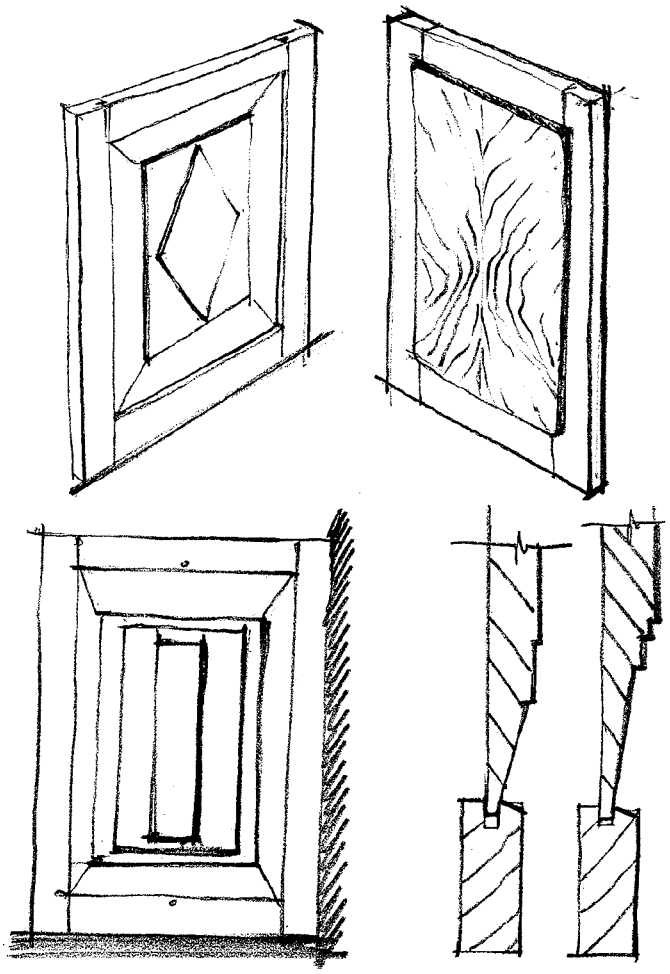

Fig. 2: Proportion and pattern

The pattern possibilities are infinite. The peg holding the panel on center can be an interesting detail for the observer to discover—don't let it become a cliche. It needn't be taken through to the front of the rails.

Illustrations: Ian J. Kirby

tions within the whole. We can alter the mood of a piece by changing the panel's attachment to its frame.

Within the predetermined dimensions of the frame, the relative proportions of the rails and the stiles can vary considerably, though it is common to find the top rails in a door to be about two-thirds the width of the bottom rail, and the stiles to be about three-fourths the width of the top rail. This isn't necessary to produce an acceptable appearance, but many woodworkers build doors as though these proportions were divinely decreed. Altering them within the limits of structural necessity can produce a wholesome diversity of appearances. The proportions of the panel—the dimensions of its field, the depth of its shoulder, the width and slope of its bevel—are all subject to considered alteration.

For showing off highly figured wood, the frame and panel is excellent. The usual way of doing this has been to resaw the figured piece and to edge-join the halves into a bookmatched panel. Edward Barnsley's desk *(FWW* #16, May '79) exhibits how figured wood can be enhanced by a frame. This desk, by the way, incorporates two different types of frame-and-panel construction and shows the discriminating and sensitive use of a frame and panel typical of Barnsley and others, such as Gimson and Vals, who were part of the Arts-and-Crafts movement. Generally, the plainer form of paneling—overlaying it onto the frame—shows a highly figured piece of wood to its greatest advantage. Raising and fielding can look fussy when the wood is highly figured.

The face of the panel can be treated in countless other ways. You can inlay it with mother-of-pearl, ivory, brass or other materials, or the field can serve as a ground for marquetry or wood inlay. Carving on panels has taken many forms. English "joyners" of the 13th to 15th centuries imitated almost slavishly the tracery and linenfold patterns common in stonemasonry. It was also common in this period for panels to be painted with vibrant colors in a variety of abstract geometric designs. In our own century, Mousey Thompson adzed the surface of quartersawn oak panels for a mild rippled texture, subtle to touch and sight.

I wish contemporary panels conveyed such vitality and served the imagination as well. I'm not saying that we have to paint panels or inlay them or dress them up in other ways. I am saying that we ought to realize that the panel is an unexploited vehicle for expression, for there is in fact no woodworking system with as great a potential for individualization within its essential structural features. This invites the woodworker to explore some of the system's possibilities. The easiest way to play with all of these possibilities is to make a full-size drawing, or several of them, to help you visualize the critical relationships between the parts. A further survey of traditional treatments and manufacture of the solid-wood frame and panel may help contemporary woodworkers to a livelier use of the system.

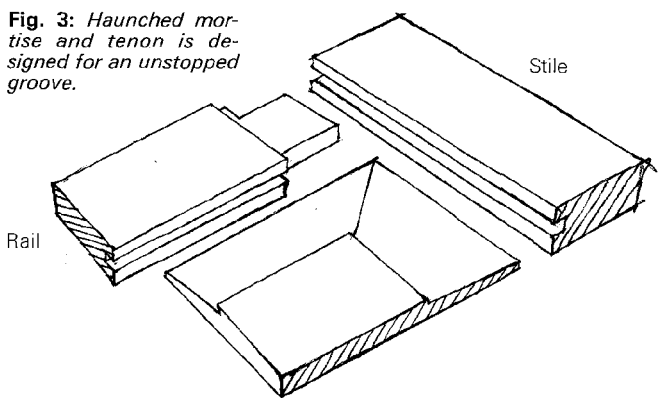

Fig. 3: *Haunched mortise and tenon is designed for an unstopped groove.*

The frame — Designing a frame and panel begins with a sectional view of the two parts and a decision about the joint to be used in bringing the frame together. The groove is generally placed in the center of the frame stock. If you use a square haunched mortise and tenon to join the frame, then the grooves can be plowed right through the joint without interruption (figure 3). This is no happy accident. The joint was designed for the groove to be continuous, because a plow plane can't cut a stopped groove. When making the haunched mortise and tenon by hand, the question arises about what to do first, plow the grooves or cut the joint. I recommend cutting the mortises and tenons first. If you plow the groove first, you obliterate the gauge lines on the mortise and on the inner edge of the tenon. And nothing is more agonizing than trying to cut an accurate mortise without reference to gauge lines. Also, it's easy to be tricked into thinking that you are cutting the mouth of the mortise at the same time you plow the groove. You can in fact. But if your mortising chisel is not exactly the same width as the groove, you'll find it almost impossible to cut the rest of the mortise in an accurate way. Using a chisel that is too large or too small, even by a minute amount, makes cutting the mortise walls an exercise in guesswork and error.

If you wish to use a mortise and tenon of the sloping haunch type so that the joint shows an uninterrupted straight line, then some means of stopping the groove must be employed. This is quite easily done on a router, shaper or circular saw by the use of end stops.

Another aspect of the frame that deserves attention is the profile of its inner edges. Since standard shaper knives are frequently used to make molding and scribe cuts in rails and stiles, I'd like to describe the less common practice of chamfering the inner edges. It creates a boundary that is decisive and bold, not busy or blurry like poorly conceived moldings. There are three conventional ways to chamfer the inner edges of the frame, two of which require redesigning the joints.

The simplest way is to assemble the frame dry and cut a 45° chamfer with a router, using a bit with a ball-bearing pilot. The cut will be rounded in the corners (figure 4) but can be squared up if desired with a sharp chisel to form what is called a mason's miter (figure 5). But if you want the line of the joint and the outer edges of the chamfer to form one continuous line, then more refined joinery is called for. The first method involves cutting the tenons on the rails as if you were making a long-and-short-shouldered joint (figures 6 and 7). Cut the mortise in the conventional fashion, and then chamfer the inner edge of the stile. To accommodate the chamfer, the long shoulder of the tenon is beveled inward from the shoulder line. A variation of this method also leaves the line of the joint and the outer edge of the chamfer uninterrupted. But instead of beveling the underside of the long shoulder on the rail, you remove a section from the face of the stile to accommodate the long shoulder. Then the chamfers on both rail and stile must be mitered to fit (figure 8). Making this joint requires careful measuring and marking with a mortise gauge and cutting gauge. Chiseling should be done across the

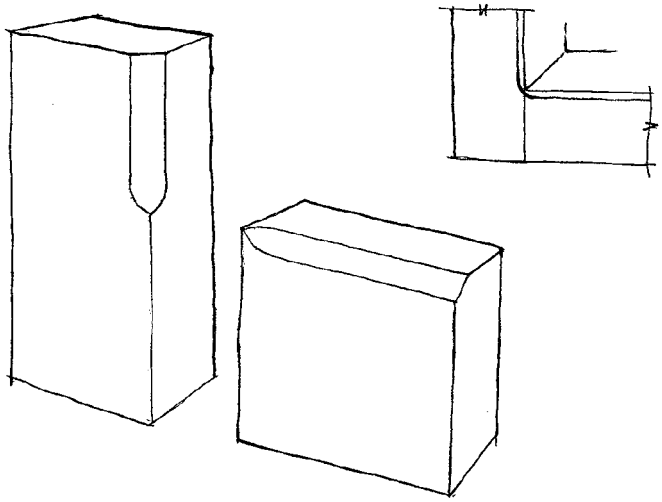

Fig. 4: *To bring the chamfer around the corner in a 90° arc, cut most of the bevel before assembly. The corner round should be completed after gluing up because of the fragile short grain on the rail.*

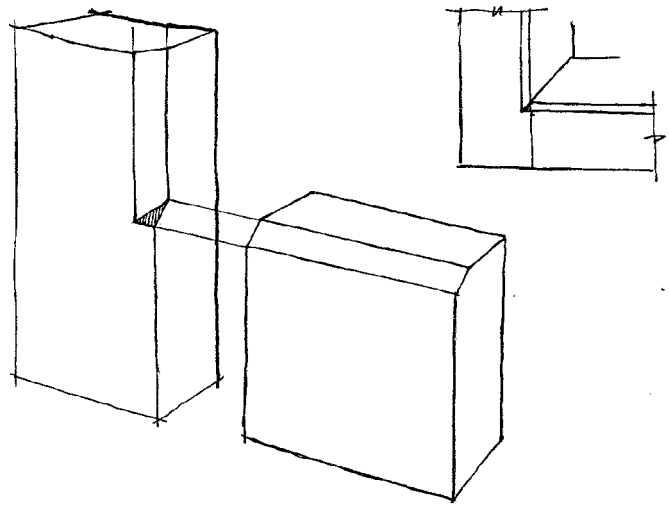

Fig. 5: *Mason's miter brings vertical and horizontal chamfers together. The disadvantages are that the chamfer does not line up with the shoulder of the joint, and a little triangle of end grain spotlights the mitered corner.*

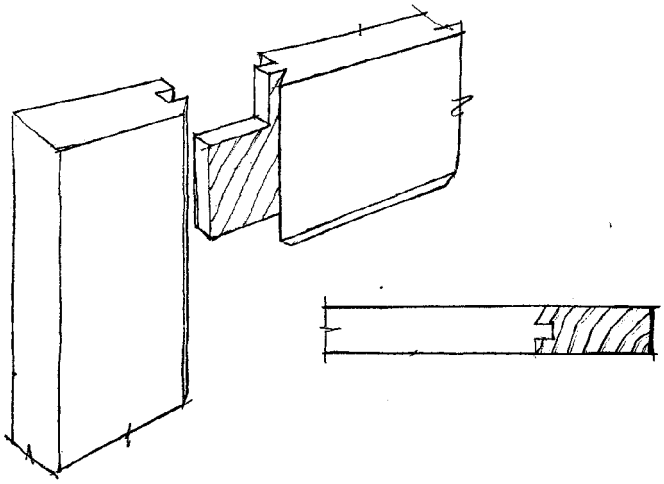

Fig. 6: *Beveled or scribed version of long-and-short-shouldered mortise and tenon permits precise alignment of joint and chamfer lines.*

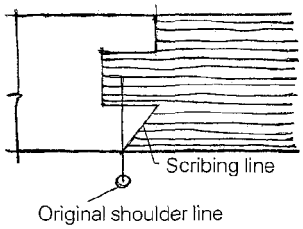

Fig. 7: *Plan of stile/rail joint showing original line of shoulder before undercutting.*

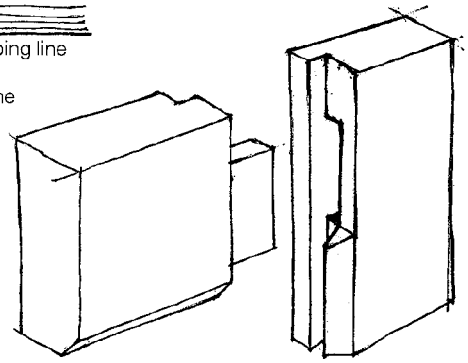

Fig. 8: *Another variation of long-and-short-shouldered mortise and tenon demands care in marking out to get the joint to close properly and the miters to meet on a line.*

grain, and the mouth of the mortise plugged with a softwood block to prevent the tissue from splintering out.

Don't sand the chamfer if you wish to retain its crisp edges and the fine texture of its tooled land. Sandpaper rounds and softens these critical light-reflecting angles and faces. You may try sanding, and even get an apparently satisfactory look until the finish is applied, but then you will find the crispness lost and the clarity of the land muddied.

Yet another variation in the design of the frame is not to use grooves at all, but to lay the panel in a rabbet cut into the edges of rails and stiles. The panel is retained with an applied molding on the show side of the work. Some might think this method to be a good example of bad workmanship, but it is well suited for some types of work, including those using modern materials. It's worth noting that much of the traditional frame-and-panel joinery was done this way.

The panel — When thinking about the design of a panel three possibilities are available: a fielded panel, raised or not, an unfielded panel and an overlapped panel. According to the type of design you choose, you must consider variables such as the size of the field relative to the frame dimensions, the width and slope of the bevel, the depth of the shoulder, and the treatment of the field (carving, inlay, figured wood)—all of which combine to determine the finished look.

You can field a panel without raising it by cutting the bevel right through to the field and eliminating the shoulder. But it's difficult to get good results when you define the field with the bevel alone because invariably that critical line where the two converge will be untrue. It can be straightened out with a hand plane, but it's not easy. Also, panels without shoulders look indecisive, even if the field edge is straight.

It's common practice when raising a panel to cut the shoulder lines first (figure 9). This fields and raises the panel and gives you an idea of its proportions. You can accomplish this by setting the fence on your bench saw to the width of the bevel and the blade to the depth of the shoulder, producing four shallow cuts equidistant from the panel's edges. Saw the bevel by tilting the sawblade to the required angle and setting it to the required depth. When cutting the bevel, a wedge should fall off the waste side of the cut; this means that pressures on the blade are equal right and left. But raised

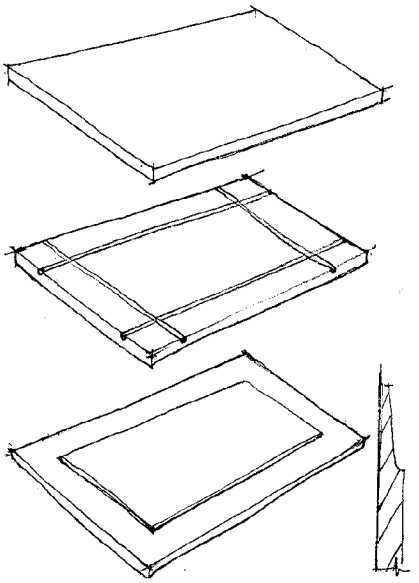

Fig. 9: *The field is defined by saw or router cuts. You can use a nosed cutter in your router to give the shoulder a softer profile. The bevel is angled at the time of sawing or it can be cut with a bench rabbet plane.*

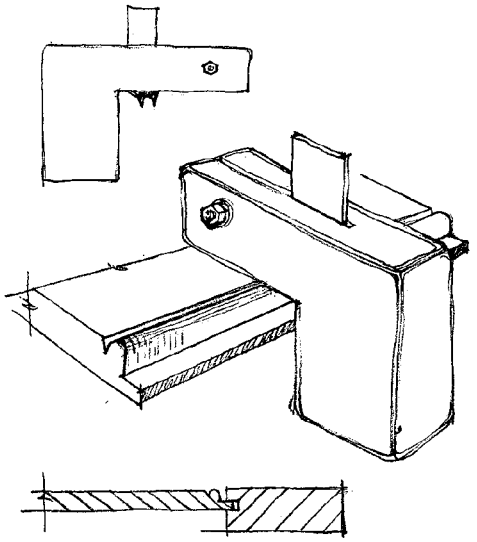

Fig. 10: *A panel edge need not be beveled. Here it is rabbeted and a bead mold run down its edge. The scratch-stock must be held firmly and pushed away from the body. It should settle gently into the cut and not be forced.*

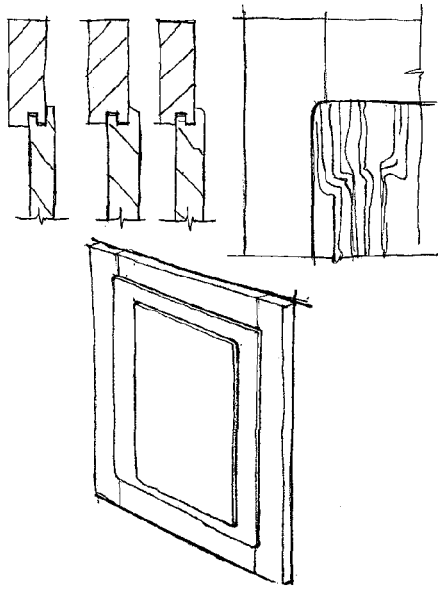

Fig. 11: *The edges of the overlapped panel may be treated in a variety of ways—rounded, beveled or left square. At this stage you introduce details that affect the highlights and shadows of the panel.*

panels are usually more delicate than this will allow. So to minimize blade vibration and consequent scoring of the bevel, use a sharp, stiff tungsten-carbide-tipped saw and feed the work gently into the blade.

However carefully you cut the bevel, its sawn face will need some cleaning up. It can be sanded, but you'll have greater control and get better results using a rabbet plane that's wide enough to clean the whole width of the bevel in a pass. You could also make a jig for your router and make the cuts with a properly profiled bit, or you can obtain the fastest results with a spindle shaper. The latter should be used with great caution, and you should make three or four passes, removing only a little stock with each.

Because the whole system is designed to accommodate the hygroscopic movement of wood, it's not unusual for a panel to travel about in its grooves, sometimes being noticeably off center. This is easily rectified by driving two nails or wooden pegs into holes on the inner edge of the frame, top and bottom, so that they capture the panel on center (figure 2, p. 55). The pegs make interesting little details if left slightly proud and rounded off. You can get the same result by applying a dab of glue in the center of the grooves top and bottom, taking care during assembly to position the panel properly. It is normal for the panel to rattle when tapped. The rattle can be eliminated, but need not be.

The panel doesn't have to be raised and fielded to be held in the frame. One of the sweetest systems brings the groove forward of center to create a flush panel from very thin stock. This system demands accuracy in cutting the top and bottom shoulders so they just touch the rails. The panel edges, which move slightly over the frame, can be molded by using a scratch-stock that you can make yourself (figure 10).

The third possibility exchanges the angular, vigorous look of the usual raised panel for the softer, more subdued look of the overlapped panel. Panels of this sort are rarely seen because most woodworkers hesitate to depart from the more accepted method, yet they are no more difficult to make. The panel is held in the frame by a set of tongues and grooves, which should not be cut too deep as a long tongue is likely to curl back (figure 11).

Given the possibilities of the frame and panel, it is surprising to find them so little realized by contemporary cabinetmakers working in solid wood. Industry, however, has not ignored their appeal. In one method of quantity production, frame-and-panel doors are molded from a mulch of the sort used to make particle board. After a few seconds of heat and pressure, out pops a frame and panel, raised, fielded and detailed to your requirements, ready for printing with a photocopy of wood grain. Before the offended reach for their pens, consider that if industry will apply its technical and economic resources to such an extent, there must be a strong demand for the frame and panel. Given this market, there is a noticeable lack of frame and panel being used in a refined and exciting way by makers of hand-built, solid-wood furniture. This seems a pity since I've always felt that the cabinetmaker's shop could be the birthplace of technical and aesthetic models for industrial production.

The sad fact of the matter is that there exists an emotional antagonism between the designer/craftsman and the designer/executive, and little productive communication is shared between them. The craftsman suffers the most as a result, because he closes the door on salespeople, designers, decorators and others who work either with or for the larger furniture manufacturers. It does the craftsman little good to have a vast technical knowledge, a keen aesthetic sense and a shop full of tools if he denies himself contact with people who can market his furniture and who can benefit from his fidelity to quality and his innovative thinking. I hope this examination of the frame and panel will promote improved communication between the craftsman in his shop and the larger world of woodworking. □

Ian Kirby, a regular contributor to this magazine, teaches woodworking and makes furniture in Bennington, Vt.