# The Mortise and Tenon Joint

## Best results come directly from chisel and saw

*by Ian J. Kirby*

The mortise and tenon joint is used to bring two pieces of wood together, usually at a right angle, as in frames for carcases and doors, table legs and aprons, chair legs and rails. It is fundamental to woodworking and is made in innumerable variations, either by hand or machine. This discussion will focus on the basics of designing mortise and tenon joints to fit their purpose in a structure, and on making a single joint with hand tools. When there are only a few to do, a skilled workman will hand-cut them in the time it would take to set up machines.

A mortise and tenon joint gets its strength from the mechanical bond of letting one piece of wood into another, and from the adhesive applied to closely fitting long-grain surfaces. The craftsman must design the relative proportions of the mortise and tenon in order to best resist the forces the joint will encounter in service, to balance the wood tissue between the mortise and the tenon, and to maximize the long-grain gluing surfaces. Then he must make the parts accurately and cleanly, in order to achieve a close interface and thus a strong glue line.

A common mistake is to search in books for formulae and schematic diagrams of universal application. Instead, one should analyze the function of the joint in the structure one wants to make, and the loads it will have to bear. Does it have to resist downward pressure, or tensile load, or bending and twisting forces, or as is frequently the case, a combination of a number of forces? Knowing exactly what performance one wants from the joined pieces should be the first step in designing the joint.

The general rule is that there must be enough wood on the tenon, both in length and in section, to withstand the load it will have to bear. If the load is exclusively downward the tenon should be thick, but there is no need to have thick mortise cheeks. On the other hand, if there will be twisting forces, both the mortise cheeks and the tenon must be thick enough to withstand them. If the force is an outward pull or a pivoting, the tenon should be long enough to provide ample gluing area, or long enough to pass right through the mortise so it can be wedged on the other side.

The old rule of thumb when the mortise and tenon members are the same thickness is that the mortise should be one-third the width of the stock. This makes the tenon and each of the mortise cheeks the same thickness. Slavish adherence to this rule often leaves the tenons cut too mean, imbalancing the wood tissue between the tenon and the mortise cheeks. It would be better to say that the tenon thickness should about equal the thickness of the mortise cheeks added together. Thus in the example of a 1½-in. thick rail and stile, make the mortise cheeks each ⅜ in. thick and the tenon ¾ in., instead of making each ½ in. thick. The accompanying diagrams illustrate some of the forces such a joint commonly encounters, and some of the ways of keeping the joint strong where it needs to be strong. Notice that where twin tenons are used to resist bending and pivoting forces, as where the seat rail

Illustrations: Ian J. Kirby

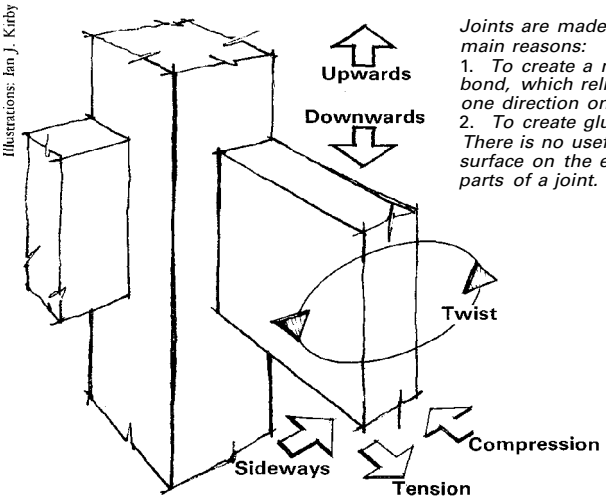


*Joints are made for two main reasons:*
*1. To create a mechanical bond, which relies in at least one direction on friction.*
*2. To create gluing surfaces. There is no useful gluing surface on the end-grain parts of a joint.*

*Design the joint so that the remaining tissue on both mortise and tenon will best resist the expected strain or load.*

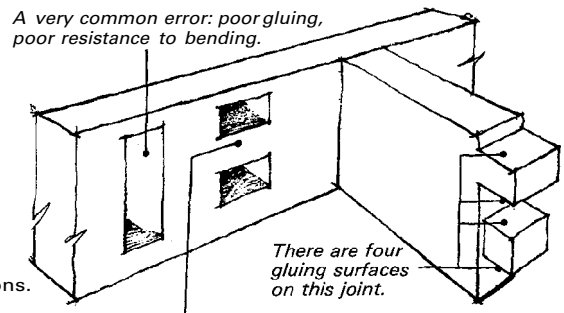

*A very common error: poor gluing, poor resistance to bending.*

Twin tenons.

*This bridge piece is usually the same width as mortise.*

*Tenons are usually wedged when through.*

*There are four gluing surfaces on this joint.*

*The tenon may be bare-faced, which means the mortise must be very accurate or a gap will result. This gap may not be present when the joint is made, but the tenon piece becomes thinner when its face is cleaned up. Or it may have a side shoulder, which slightly reduces gluing area.*

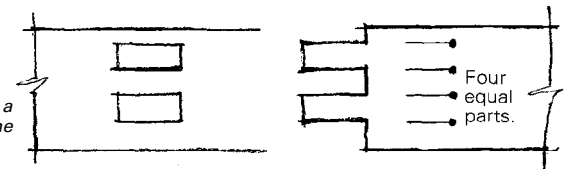


*If pressure on this member is mainly downwards, such as a chair seat rail, then leave more tissue at the bottom of the joint than at the top.*

Joint proportions

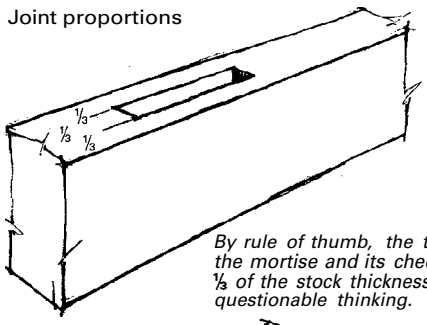


By rule of thumb, the thickness of the mortise and its cheeks are each 1/3 of the stock thickness. This is questionable thinking.

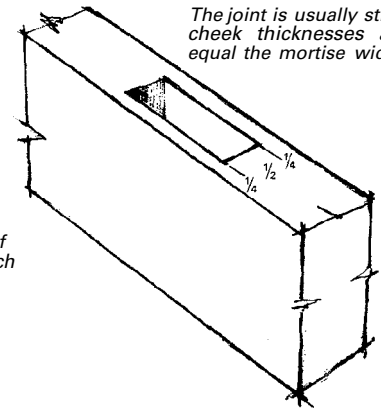


The joint is usually stronger when the cheek thicknesses added together equal the mortise width.

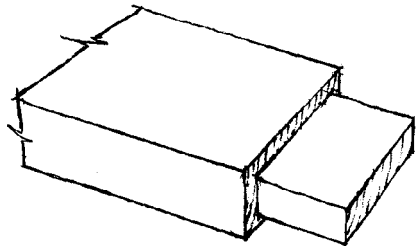

It's usual to make a 1/16-in. to 1/8-in. shoulder, to ensure cleanly fitting corners.

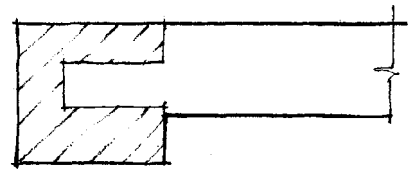

The gluing area is the same for both joints, but the bottom one is mechanically imbalanced.

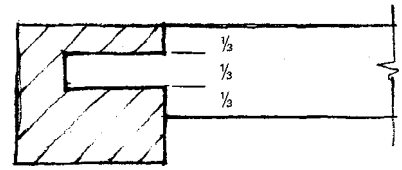


Common error: Automatically following the 1/3 rule leaves a weak tenon, and imbalanced wood tissue on the mortise cheeks.

meets the side rail of a chair, the object is to increase side-grain to side-grain gluing area. A common error when joining two pieces of wood this way is to make the tenon so that long-grain gluing surface is reduced and end-grain surface is increased—no help at all. Another consideration in maximizing gluing area is the depth that the tenon goes into the mortise member. If it is not to be a through tenon, one can safely mortise to within 1/4 in. of the far side of the stock.

The simplest form of the joint is a *T,* where the mortise is somewhere in the middle of a length of wood—as in the lock rail of a door, or between the side rail and back leg of a chair. This article will focus on that situation, leaving the added complexities of joints at corners (which are usually haunched), joints in grooved or rabbeted pieces (usually with long and short shoulders), and joints that are wedged or pinned, for a subsequent discussion.

**Tools for mortising** — For accuracy, the mortise is usually cut first and the tenon cut to fit it. The essential tool is a mortise chisel, which determines the width of the mortise and therefore of the tenon. The mortise chisel differs from an ordinary bench chisel in that it is stoutly constructed to withstand heavy pounding with a mallet and levering, its blade is precisely rectangular in cross section, and there is no narrow waist where the blade meets the handle. The rectangular section of the blade makes the chisel somewhat self-jigging in action, so it will cut an accurate mortise. Its stout shoulder allows levering out of the waste. The ordinary bench chisel with beveled sides is most inadequate for mortising because it will twist, and may snap off at its narrow neck. Beyond this, there are various chisel patterns evolved by the branches of the trade, which amount to two main types: socket, where the handle fits into a socket in the blade, and tang, where an extension of the blade enters the handle. A tang chisel usually has a leather washer between the blade and the handle to cushion the recoil after the chisel is struck with a mallet. The socket also offers resilience and thus performs a similar function. The handle may be of a ring-porous hardwood such as ash, which is prone to splitting and therefore will be bound with metal ferrules top and bottom. Or, it may be a denser diffuse-porous wood such as box, and no ferrule is used at the top. Or it may be a high-impact plastic, which is quite satisfactory.

The details of the handle and how it fastens to the blade are matters of personal preference. What does matter is that the blade be stout, truly aligned with the handle, and truly rectangular in section. All too often, even new chisels fail to fulfill these requirements, but they can usually be put right (see box, page 51).

The other necessary tool is a mortise gauge, and you cannot make the joint reliably accurate without one. It differs from an ordinary marking gauge in that there are two spurs, one of them movable. The distance between them is struck from the chisel itself and transferred to all the pieces of wood at the same setting. This critical distance can be maintained even when the position of the fence needs to be altered to account for mortise and tenon members of different thickness. A good mortise gauge is expensive, but it will last a lifetime if it is reserved for marking out mortise and tenon joints. To try to manage without one, by resorting to two settings of a marking gauge, is futile and plain bad practice. A mortise gauge often has a single spur on the side of the beam opposite the double spurs, apparently an encouragement to use it as an ordinary gauge as well. I usually remove or grind off this spur. In view of the expense of the gauge and its importance, it should not be expected to withstand the robust usage that a marking gauge is liable to receive.

Whether the fence is locked to the beam by means of a thumbscrew or a slotted screw is not important, but the life of the gauge will be considerably extended if this screw is not overtightened. It bears on the brass sliding strip that houses the moving spur, and there should be two small protective pellets of soft metal between the screw and the brass strip. If you have occasion to take the tool apart, be sure not to lose the pellets. If they aren't in there already, then make two and put them in. The spurs on the new gauge are usually ground to a cone-shaped point, as on a pencil. Although some workers like to sharpen them as if they were tiny knives, I believe the gauge is more accurate if they are left alone.

Cutting the joint depends on the direct relationship between these two accurate tools, the mortise chisel and the mortise gauge. No other tool need intervene between them in

Setting the mortise gauge

*When setting the mortise gauge, the depth of the chisel between the spurs is a matter of personal preference. The effect of this setting is felt in the positioning of the chisel when chopping the mortise and the positioning of the saw when sawing the tenon. Will you try to split the line or saw to one side of it?*

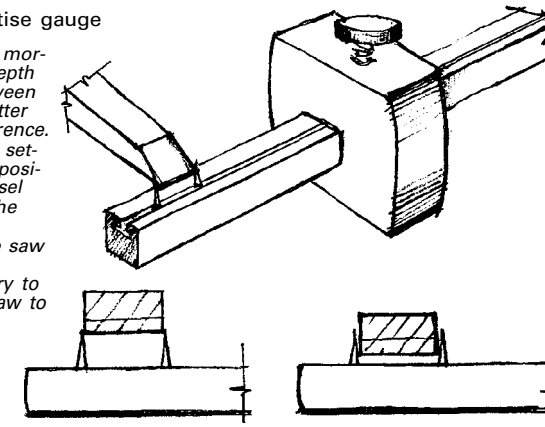

quickly producing the most accurate joint. The mortise should not be widened by moving the chisel out of alignment at each cut, nor is it wise to adjust the width by paring its sides. Design consideration notwithstanding, one chops the mortise to the width of the chisel one has. The need for a set of several chisels quickly becomes apparent.

**Setting the mortise gauge** —There is a need for some fine judgment in deciding exactly how to set the mortise gauge from the chisel. It depends on how you intend to go about sawing the tenon: Will you try to saw to one side of the gauge line, or will you try to split it? To be in a position to be able to split the line, the spurs are set with the chisel between them, rather than with their very points exactly coincident with the chisel's extreme corners. This may seem like the workmanship of risk gone mad, but it does amount to the thickness of a line and can mean the difference between a good fit straight from the saw or one that needs further adjustment. The chisel should sit between the spurs about as deeply as the spurs will sink into the wood as they mark. This affects only the sawing of the tenon, not the width of the mortise, which is determined by the width of the chisel alone. The chisel will just touch the inside of each line and some of the gauge lines may remain visible after the cutting.

Having set the spurs, set the fence relative to the nearest spur to determine the cheeks of the mortise and the shoulder of the tenon, and mark them both on all the pieces of the wood. If the mortise member is thicker than the tenon piece, the fence setting will have to be changed, but on no account change the spur setting.

**Shoulder lines** — Shoulder lines are knifed round deeply with a try square from the face side and face edge. In the end, this knife line is the part of the shoulder that will show. It should be made with a thin knife sharpened flat on one side, like a chisel. I keep a small pocketknife for this job alone. The line should be crisp and deep, made with one pass of the knife. Shoulder lines are never made with a pencil since it leaves no register for subsequent paring with either chisel or shoulder plane. Scribing across the grain with a pointed tool is equally worthless, because it merely scratches the surface and drags up the wood fibers rather than cutting them.

**Chopping the mortise** — The mortising chisel, once it is correctly started, is self-jigging: each cut tends to follow the previous cut. However, care must be taken to chop vertically or the mortise will wander. The important thing to get right is stance and body position relative to the workpiece and to the tool. The tool is held almost at arm's length and aligned with the center of the body. This way it is easy to see that it is vertical. It cannot be seen by standing over it. A good aid for the beginner is a straight piece of wood clamped to the face side of the work as an extension of its known accuracy, in advance of the joint itself so it doesn't get in the way. A less good aid is a try square resting on the bench against the work. This relies on the assumed flatness of the bench, rather than registry on the known accuracy of the workpiece. The square tends to fall over when the chisel is struck.

In any event, the workman must stand far enough back to sight the chisel properly, and to strike it hard with the mallet while continuing to sight it. The diagrams on the next page show the orientation of the chisel and the strategies for enlarging the mortise once it is begun. The most common fault is to strike too lightly. Cutting a mortise is quick, once one has enough confidence to strike each blow hard.

The best mallet for mortising is the cabinetmaker's or carpenter's type, which has a heavy rectangular head and a large, flat striking face. It has little tendency to deflect. One can confidently deliver a substantial blow and still keep one's eye on the cutting end and alignment of the chisel, not on its handle. Many people try to use the common cylindrical carver's mallet, which is meant for light tapping. Since the chisel handle is also domed, a good smash is likely to deflect onto the hand, also bruising the confidence.

Obviously, the workpiece has to be placed on the bench so that the correct stance can be taken, but its position is also important in other ways. The process involves heavy impacting with some risk to the bench surface, especially if the chisel accidentally cuts right through. The crucial part of the bench, for me anyway, is the surface in front of and around the vise, where the bench stop is. This should always be in perfect condition and truly flat, so it makes sense to do heavy pounding over the leg away from the vise. The workpiece can be clamped down, but with experience this becomes unnecessary. There is no need to support the cheeks of the mortise with clamps because the direction of the impact and of severing the fibers is such that (unless the grain is very wild) little strain will be put on the cheek tissue.

Because levering out the chips bruises the fibers at the end of the mortise, work it to full depth but to within only ⅛ in. of the ends. The ends may then be squared up to the line with one clean cut.

*Align the chisel with the center of your body, strike it hard, and then lever out the waste.*

Chopping the mortise

*When the chisel is struck, it tends to cut into the wood tissue in the direction away from the sharpened side. A scooping action results, giving rise to two different methods of removing the waste from the mortise.*


*One method is a form of layering to achieve the required depth. The chisel is driven to the same depth in each position, with about ½ in. being the maximum depth, depending on the hardness of the wood. Move the chisel about ⅜ in. away from its flat side for each new cut. Repeat the process after the first bottom is made. Try to keep a level bottom without deep troughs, to avoid inadvertently chopping through.*

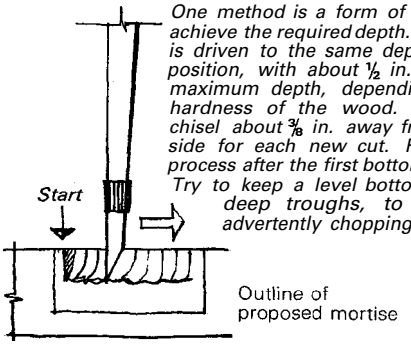


*A common depth gauge is a piece of masking tape wrapped around the chisel.*

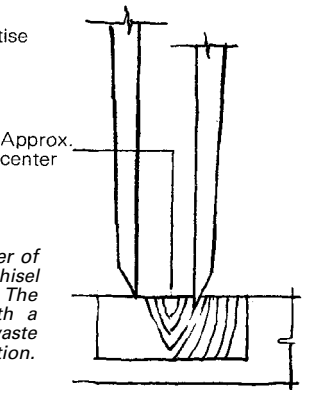


*The second method begins in the center of the mortise, turning the flat face of the chisel toward the center in each new position. The aim is to achieve the final depth with a wedge-like cut, and then to remove waste from top to bottom with each new position.*

*In either method leave the ends until last. Place the chisel in the knife cut you made when marking out the mortise, and use a small square to make sure the face of the blade is vertical. Drive the chisel accurately and hard; do not undercut the ends.*

There are other methods of removing the waste, the most popular being with a drill the same diameter as the mortise width. This is to introduce yet another tool, which itself requires a setup and jigging to ensure exactness. Then the chisel has to be used anyway, whereupon the holes and the shape of the remaining waste encourage the chisel to twist. Others drill the waste and remove the residue by paring the cheeks with a wide bench chisel, invariably leaving the cheeks out of square or twisting or uneven. It is probably lack of confidence that persuades people that these other methods are safer and quicker when in fact they are neither. They invariably leave a worse result than that achieved straight from the mortise chisel. Resorting to such methods means only that the confidence that comes through practice is never acquired.

**Sawing the tenon** — Offer the tenon member up to the mortise to see how the gauge lines correspond to the actual hole, and to remind yourself of the decision you made when setting the marking gauge: Will you try to split the line, or to saw along one side of it?

Put the wood in the vise sloping away from you at an angle of about 60°. With the back (tenon) saw, begin the cut at the far end of the line across the top, that is, on the end grain. Watch the cut as it proceeds across the top to the near corner, and saw down the grain parallel to the end surface for about ⅛ in. This will create a good kerf in which the saw can be constantly registered as the cutting proceeds. Now saw down the long grain to the shoulder line on the face nearest you, without going any further down the back face but without lifting the saw out of the kerf at the back corner. This requires practice—the idea is to saw down only one line at a time, while keeping the saw correctly positioned at the start of the line to be cut next. Now turn the wood around in the vise and cut the other diagonal, keeping the saw teeth inside the kerf all the time. Finally, put the wood upright in the vise and saw straight down to the shoulder lines. The diagrams on the next page should make the procedure clear. This method, once mastered, permits very fast and confident cutting. If you begin the cut at the top corner and proceed across the top and down one side at the same time, the saw is liable to wander, and corrective adjustment on one line usually puts the saw off on the other line.

To cut the shoulders, remove the wood from the vise and place it on a sawing board. Train yourself to saw about 1/16 in. away from the knifed line, in order to finish back to the line with a 1-in. paring chisel. The original knife line should be deep enough to locate the chisel as much by feel as by sight. Don't try to cut the full inch of chisel capacity, which with most woods takes too much pressure. Cut a half-inch of shoulder line, then move across half an inch. You'll find, of course, that the first cut will register the chisel for the next, a most helpful guide. The amount you can cut at one time depends on the species of wood, but the aim is to saw close enough to the line so that one chisel cut will finish the shoulder, yet not so close that the chisel can't easily click into the knifed line. If the tenon is wide, a shoulder plane is more practical than the chisel. But less than 4 in. of shoulder makes holding the plane somewhat more difficult.

Many people reason that a fine dovetail saw will produce a cleaner surface on the tenon. The Western-style dovetail backsaw, however, cuts on the push stroke and simply isn't stiff enough for the section of wood normally encountered in tenoning. The blade tends to buckle, inducing wander. The Eastern-style dovetail saw avoids this problem by cutting on the pull stroke, putting the blade into tension. However, it is

Sawing the tenon

First position of wood

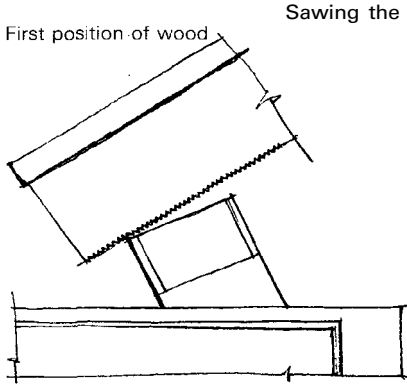

*Place the workpiece in the vise at an angle of about 60°, and low enough to get at comfortably. Stand with your feet apart as in walking, your body weight equally distributed, but stand far enough to the side to clear your right arm and allow it to work like a piston. Align the saw with your forearm, in both front and side views; the wrist shouldn't be bent. Use your left thumb and index finger to guide the saw, but don't lean on your left hand.*

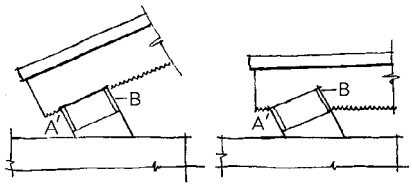


*Begin the cut on the edge away from you, at Point A, and saw down about 1/8 in. Keeping the saw in the original cut, saw straight across the top of the wood, then pivot around Point A to saw down the line facing you at B.*

Second position of wood

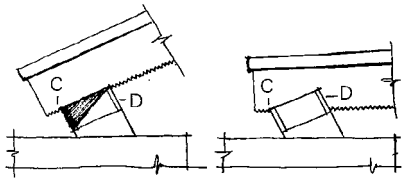


*Now turn the wood around in the vise, at a similar height and angle to the first position. The area already cut is shaded. Place the saw in the kerf across the top of the piece, and saw down the line D. The saw pivots around Point C, and again must not be lifted out of the wood at C.*

Third position of wood

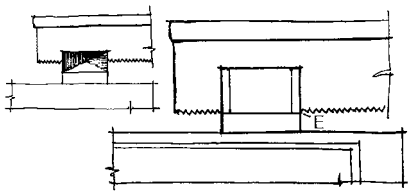


*Place the wood upright in the vise to saw down the remaining triangle to the knife line at E.*

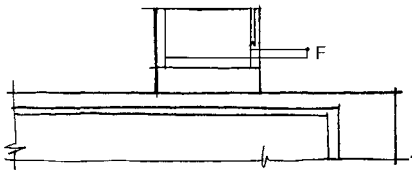


*Keep the work upright in the vise to saw down the side lines at F.*

still a good deal slower than a tenon saw and has a distinct tendency to wander when sawing through a large section. The improvement in surface quality is marginal.

Other than the shoulders, the joint should not need trimming. The tenon should come directly from the saw and the mortise straight from the chisel. It is wrong to adopt the notion that on one hand it cannot be done, or on the other that one should leave a margin of safety by cutting everything oversize, to be trimmed right. The paring of a tenon, other than to make a minor adjustment, almost always puts it into twist, or removes too much from one side and thereby offsets the shoulders, or puts it out of alignment so it won't enter the mortise at 90°. It is far better to practice sawing and learn to saw correctly in the first place.

**Checks** — There are several ways to check the accuracy of the joint before it is put together. First verify that the faces of the tenon are in line by holding a rule against the side of the wood and sighting the tenon against it. Twist or angular misalignment will be apparent. For the mortise, first check the cut ends by placing a rule into it (or through it) so that it registers against the end-grain surface. The rule should touch the whole face at both ends—watch for a bump and make sure these surfaces have not been made concave by angling the chisel back. Next, make sure the ends are vertical by holding a try square up to the rule. Finally, check for twist in the cheeks by sighting into or through the mortise.

The joint should now be assembled and checked again, although a limited amount can be learned from a single practice joint. The real test is assembly of four joints into a rectangular frame, to which the following operational checks apply. First, hold a rule across the joint to see whether both mortise and tenon are in the correct plane. If they are not, subsequent gluing and cleaning up will be very difficult. See whether the shoulders pull up tight, that the shoulder lines are even and not offset, and that the whole assembly (or subassembly) is not in winding. Finally, see whether the two pieces (or all four in a frame) come together at a right angle.

Minor adjustments to correct any of these conditions can be made by careful paring with a wide bench chisel. There are pros and cons as to whether you adjust the mortise or the tenon, and it depends on the condition you are trying to put right, but in the main the tenon is easier to adjust. You can see more easily where the correct areas are from which to work, and where wood needs to be removed. The important

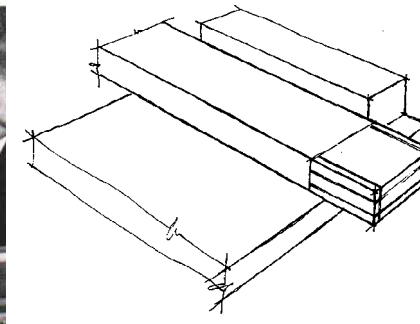

*Place the workpiece on a bench hook and cut the shoulders with a tenon saw, leaving about 1/16 in. for paring with a wide chisel or shoulder plane.*

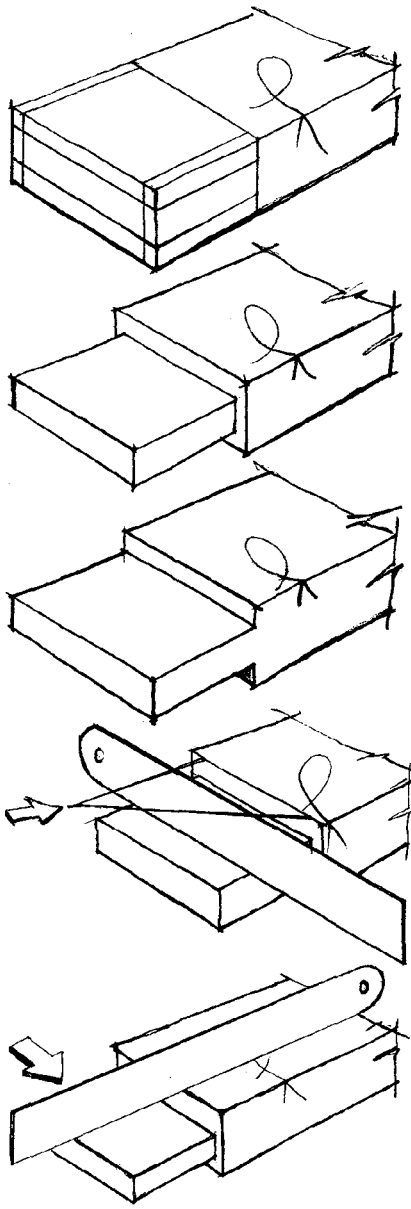

Checking the tenon

*The Tenon will look like this when it is marked out prior to cutting.*

*The tenon will look like this after it has been cut.*

*The shoulder will give a cleaner finish to the joint, hiding any tissue you may have bruised when chopping the mortise. It also eliminates the need for a too-tight fit in width, a problem when the joint is made bare-faced.*

*If the joint is very tight on entry, find the tight spots by examining its surfaces. The edge will often show signs of compression or have a glazed appearance, indicating that the mortise is too short or that its ends are not vertical.*

*The saw marks on the face will show how well it has been cut. Check with a rule and remove excess wood by horizontal paring.*

*Check the surface quality of the tenon by placing a rule across it. Check for twist by placing the rule parallel to the shoulder line and sighting over it.*

*Check accuracy of alignment by placing a rule on the face of the tenon wood and sighting the gap between it and the tenon.*

## Correcting new chisels

**With an understanding of how the mortise chisel is used, it is easy to see that the tool's handle and blade ought to be in line, so it can be sighted vertically, and that the blade has to be exactly rectangular in section, so it can chop a square mortise. Many of these tools come from the factory out of line and out of square, inadequate for the task they are made to do. They can usually be put right, and it is crucially important to do so, but it may take several hours of corrective work.**

**If at all possible, buy mortising chisels in person, not by mail, and have an accurate try square with you. A 4-in. engineer's try square is most useful for this. Make sure that the back of the blade (opposite the sharpened bevel) is flat, then check that the handle is in line with the blade both in front view and side view.**

**An out-of-line chisel isn't useless, since you can compensate each time you sight up, but it is an added difficulty you could well do without. Repair it by removing the handle and fill the tang hole, then redrill it. This is not an easy task, and you may be better off making a whole new handle.**

**Now check the sides of the blade against the back. If the two sides and the back are not at right angles, the chisel will twist as it is driven, making the mortise wider than it should be, leaving a poor face on the cheek and inducing wander. No amount of compensating by gripping the handle tightly will stop this twisting. An out-of-square chisel is the result of sloppy manufacturing standards at the finishing stage. The only way to correct it is to grind the back face perfectly flat, and then to grind the two sides until they are at right angles to the back face. The front face is not as important, but it might as well be right as not since it will help in sharpening the edge square. A machine shop will be able to do the grinding for you, or you can do it on a coarse oilstone, or on a piece of carborundum cloth glued to the flat bed of a machine and lubricated with a little oil. Removing metal from the edges will make the chisel a little narrower than its nominal size. This is of little consequence. There is no good reason for the chisel to match any particular linear measurement, whereas it must be correct to angular measurement to perform.**

thing is to analyze exactly where to remove fiber, and not to attack willy-nilly. The most controlled way to adjust a tenon is to put the work horizontally in the vise and pare horizontally across the grain. Do not pare in the direction of the grain, because the chisel will want to follow the long fibers and you are liable to remove far too much wood.

The crispness of the shoulder line is generally held to be the mark of success, but in a rectangular frame it is by no means the only thing. In particular, whether or not the frame actually is rectangular depends in part on the distance between shoulder lines. This makes adjustment of shoulders a very tricky process involving more than one joint that happens not to fit crisply. Check for squareness, not with a try square but by measuring the diagonals of the frame, which should be exactly the same.

In the glued-up frame, faults that arise from small inaccuracies within each joint manifest themselves dramatically as twist or wind or lack of flatness. For example, a tenon cut on the angle will result in a badly angled stile and probably a twisted frame. The frame should be checked by sighting across from one member to another to ensure that they are parallel. If they are not, the correction, once the frame is glued together, requires planing the whole thing flat, a considerable task. Paying attention to the checks made on the individual joints can prevent such problems.

**Clamping** — The work is best clamped together on an already flat surface. Clamping blocks should be used to protect the wood and to direct the pressure to the shoulder lines. The more important interface, however, is the effective gluing surface between the sides of the tenon and the cheeks of the mortise, and it is usual to use a C-clamp and a pair of blocks to apply some light pressure here. All the places that cannot be reached by the plane after glue-up should be cleaned and polished before glue-up. □

*Ian Kirby, 46, is director of his own school, Hoosuck Design and Woodworking, in North Adams, Mass.*