Modular Wall Unit

Mitered cases combine with a unique hanging system for versatile storage

BY ANISSA KAPSALES

Not long ago, I came across a modular shelving system in a Mid-Century Modern dealer's warehouse. Danish inventor/designer/manufacturer Poul Cadovius made a name for himself with these wall units, not to mention a ton of other things he designed. I was immediately taken by it aesthetically, but I was blown away by the unusual hanging technique. The pieces almost appear to float in midair, yet they lock in place with a clever system of angled dowels. You can change up the configuration of the pieces and the look of the whole ensemble by simply lifting the cases and moving them to different spots on the uprights.

Cadovius's company lived on as dk3, but they no longer manufacture the original system I first saw. I got my hands on an old catalog and made my version of Cadovius's invention. I kept my design very simple and

Unusual but strong hanging system. *Dowels fixed at a 45° angle in the back of all the cases lock into angled holes in uprights that are secured to the wall.*

A BASIC CASE

All the plywood cases in this wall unit are built the same way. The different treatments make them distinct from one another.

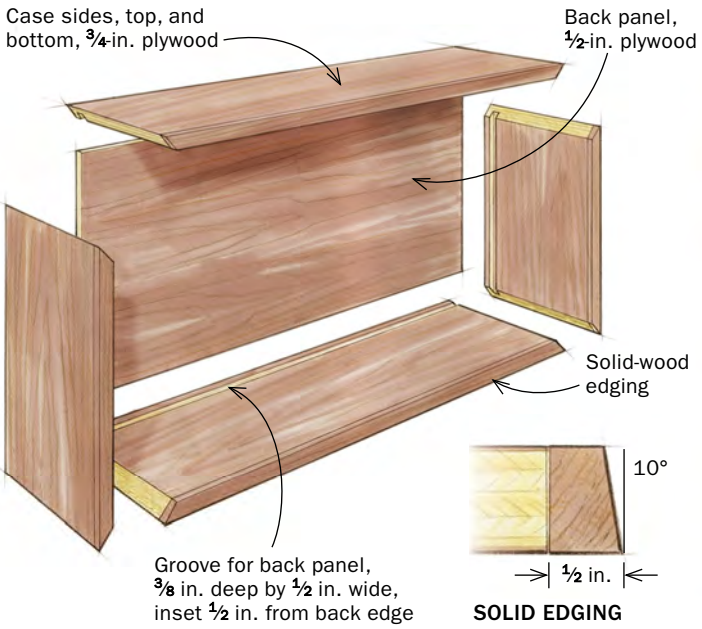

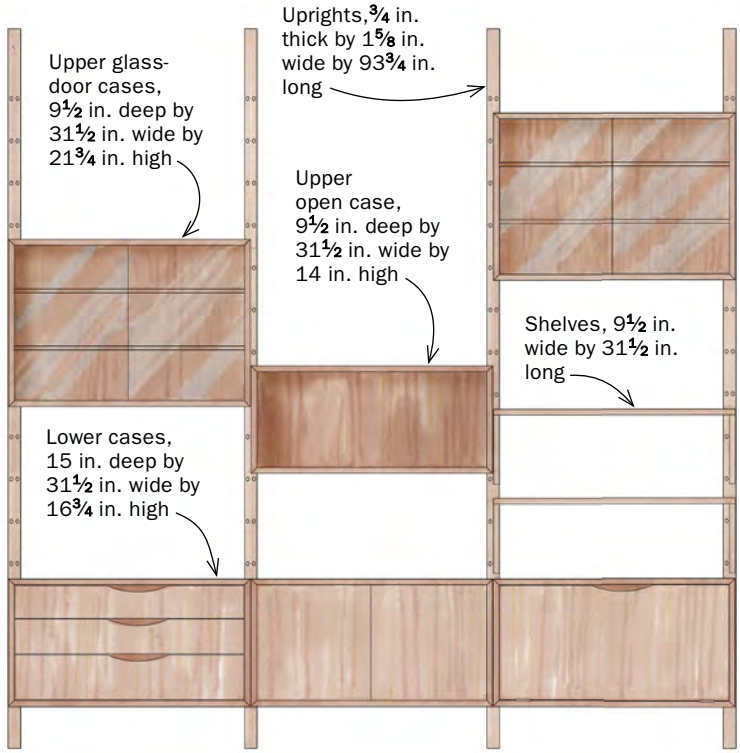

Push pad acts as a template for mitering. *A cleat at the back and sandpaper on the bottom keeps it from slipping. To use the pad, first cut the case parts to final length, then align the pad flush with the end of the case part.*

The push pad rides along an L-fence. *Clamp an L-fence to the tablesaw's rip fence. Set its height to the thickness of the workpiece. Tilt the blade to 45° and adjust the rip fence until the top corner of the blade hits the bottom corner of the L-fence. Position the push pad against the L-fence to make the cut.*

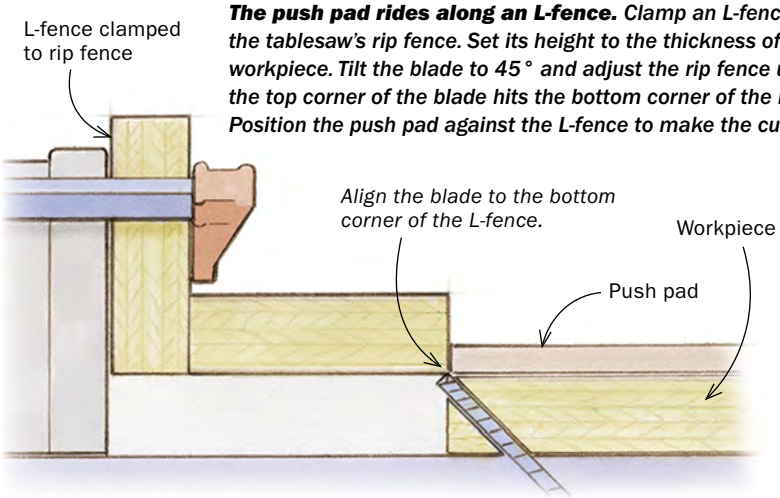

Photos: Michael Pekovich; drawings: Dan Thornton

GLUE, FOLD, AND TAPE

This mitered case is as low-stress a glue-up as you'll ever see.

Line it all up. *Use a straightedge to register against. With the parts outside face up, line up the parts against the straightedge and each other, and stretch FrogTape tightly across the seams.*

unadorned, but you can trick out the components in many creative ways.

With six cases to build, this is a big job, but the construction is straightforward. I built my cases with walnut-veneered ¾-in. plywood, mitering the corners and applying solid walnut lipping to the front edges. Each case has a ½-in. walnut plywood back glued in, and I felt that this, along with the miters, provided ample strength and rigidity. I've built a number of plywood cases this way over the years, and none have failed. For extra security, you may choose to reinforce this joint with splines, biscuits, or L-tenons.

Start with the cases

I started by cutting down the plywood for the carcases, leaving the pieces about 1 in. over width but cutting them to exact length.

My bottom cases will almost always be lined up together; therefore I cut the plywood so the grain runs across the top of them, which means the grain won't wrap around each box.

Once you cut the case parts, glue on ½-in.-thick solid edging. I milled the edging slightly over the thickness of the plywood and, after glue-up, I used a block plane to flush the edging to the plywood.

Once the edging was flush, I ripped all the parts to width with the edging against the fence. Then I tilted the blade to a 10° angle and, with the plywood edge on the fence,

Flip it, glue it, and wrap it up. *Carefully turn the whole assembly over, add glue to the miters, place the back in the groove, and fold it all up. Tightly tape the final corner. Before gluing, Kapsales prefinishes the insides of the cases and backs with shellac and wax.*

OPTIONS FOR OUTFITTING THE CASES

Kapsales fitted different cases with sliding plywood doors, sliding glass doors, drawers, and a drop-down door. She left one case open.

PLYWOOD SLIDING DOORS

Doors are edged with solid wood and slide on runners glued into the case. Wider edging on one side accommodates a recessed pull.

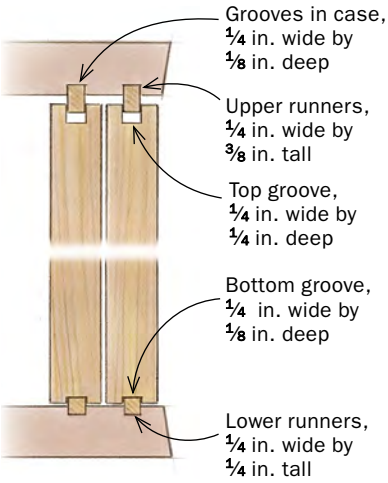

GLASS DOORS

The 1/4-in.-thick glass doors slide in tracks installed after the glue-up. They glide so easily that a little finger pressure is enough to move them back and forth, making pulls unnecessary and leaving the view uninterrupted.

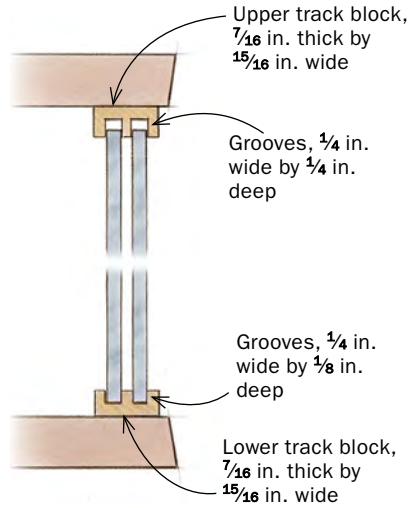

ripped the angle in the solid-wood edge. Finally I tackled the miters. I used a crosscut sled to trim the edging to the length of the plywood, and then I used an L-fence and a push pad to cut the miters. While at the tablesaw, I cut the grooves for the back and cut any other grooves I needed on the interior of the boxes.

I glued up one box at a time. I lined up the parts in order, outside face up, on my bench. Using a straightedge across the front of all the parts I made sure everything was lined up perfectly, and then I taped across the seams. I carefully turned the assembly over, applied glue to the miters and in the grooves for the back, and then folded up the parts with the back in place and taped the final corner closed, stretching the tape taut.

Different case treatments

There are five different types of boxes in my wall unit. Each one is handled a little differently.

One has sliding plywood doors edged on the sides with solid wood and grooved on the top and bottom to slide on runners that are let into the top and bottom of the box. I used wider edging on the outsides so that I could rout a slight recess for a pull.

VERTICAL GRAIN DRAWERS

Three drawers with vertical grain on their fronts slide on runners glued and pinned to the inside of the case. A crescent cutout serves as a simple pull. Because the drawer fronts are plywood, Kapsales uses Dominos to hold the drawer boxes together.

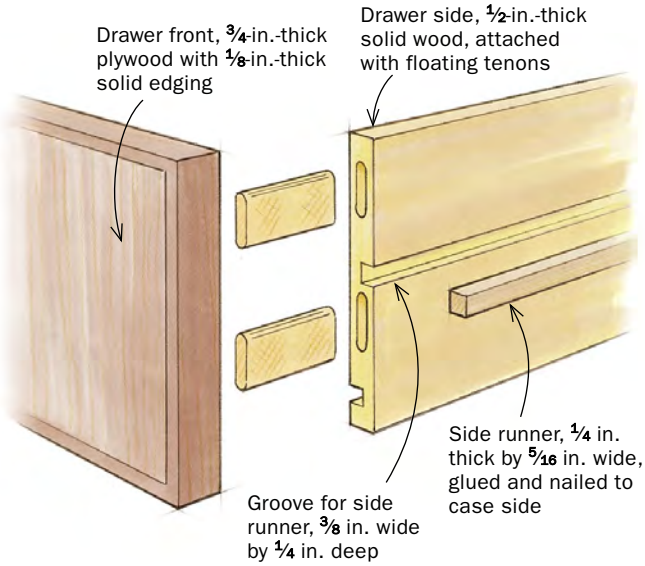

The case with drawers has wood runners glued to the case sides, and a groove in the side of the drawer that mates with the runners. The drawer sides and back are solid wood, but the fronts are plywood, which allowed me to run the grain vertically. I used a Festool Domino to join all the drawer parts.

I cut a crescent recess into the top of each drawer front. I edged the crescent with 1/16-in. veneer, and then edged the top of the drawer front over that, blending where the straight meets the curve with a block plane and sandpaper.

The third large case has a drop-down door that is also edged plywood with a crescent recess in the top.

The two upper cabinets with sliding glass doors have adjustable shelves, so they get 1/4-in. holes to hold shelf pins. The glass doors run in grooves cut into solid-wood runners that are glued into the carcase top and bottom.

Open shelving

In addition, there are two open shelves. Made of plywood and edged with solid wood, they lock onto shelf brackets with short dowels. The shelf brackets hang on angled dowels just as the cases do. The brackets are two solid-wood pieces that are mitered, reinforced with Dominos, and glued together.

Uprights hold it all up

Honestly, the four uprights are the most difficult part of the build. They are long pieces, each with two sets of angled holes every 5 1/2 in. down its length. The holes must be consistently spaced down the length of the upright and must line up with the holes on the other uprights.

DROP-FRONT CABINET

A hinged door with a cord stay drops down and gives access to a large space. The pull is the same crescent-shaped recess as was used on the drawers.

THE UPRIGHTS ARE THE CRUX

These uprights hold all the cases, and the pairs of 45° holes along their length make the whole unit modular—so the cases can be rearranged. Accurate and consistent holes are crucial. An angled drilling block and a drilling spacer are the keys to pulling it off.

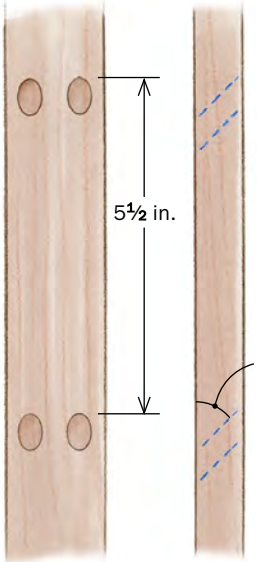

DRILLING BLOCK NAILS THE ANGLE

The block lets you drill the angled holes in the uprights. A notched block glued to the drilling block provides clamping purchase.

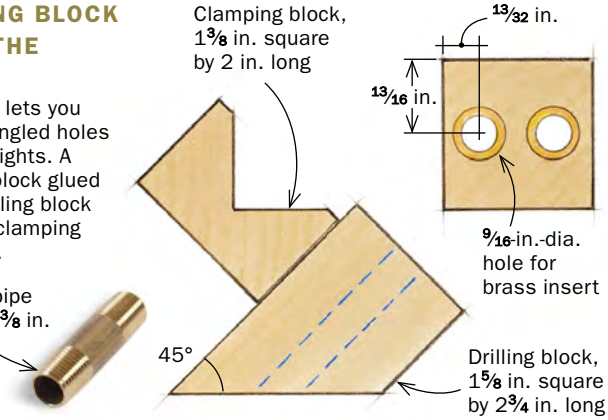

Drill bit. *The author used a ⅜-in.-dia. Kreg high-speed-steel step drill bit to drill the holes.*

DRILLING SPACER ADDS CONSISTENCY

A plywood spacer straddles the upright, and has evenly spaced slots for the drilling block. When you build the spacer, use the drilling block as the guide to locate the spacer blocks.

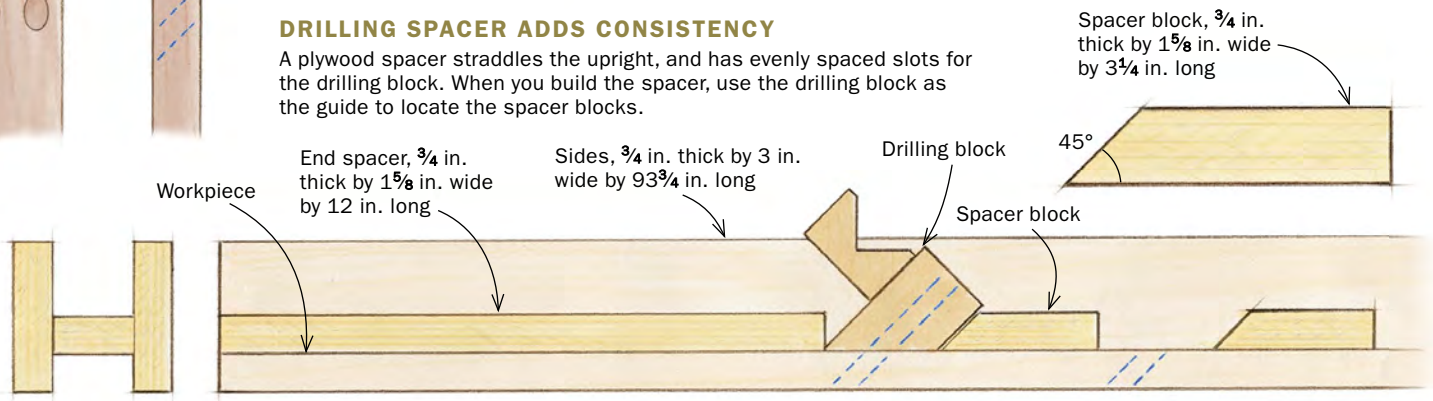

Drilling the holes. *On a flat surface, making sure the work is elevated enough that you aren't drilling angled holes into the surface below, clamp the drilling spacer onto the upright. Be sure to precisely register the bottom of the upright to the top of the jig, and clamp the drilling block in the first slot on the spacer. Drill the holes, move the drilling block to the next slot, and then repeat all the way down.*

ANGLED HOLES IN THE CASE SIDES

Each case has two single, evenly spaced dowels on each side. The dowels protrude at 45° to sink into the angled holes in the uprights. Use the same drilling block you used for the uprights but with different drilling spacers.

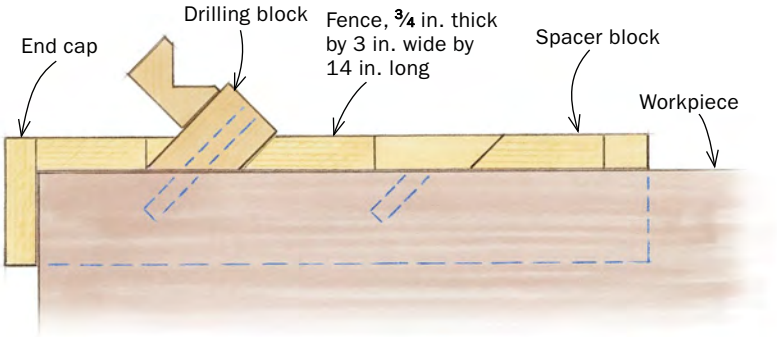

TWO DRILLING SPACERS PER CASE

Drilling spacers similar to the upright drilling spacer are clamped to the case. The two case spacers are mirror images of each other, and they register on the side of the case with a stop at the top.

Clamp and drill. *Clamp the drilling spacer onto the case side, and then clamp the drilling block in place. Drill a single hole, using the metal sleeve closest to the outside of the case side. Move down to the next spacer and repeat that step. For the other side of the case, switch to the other drilling spacer and repeat the process.*

I milled the uprights to final width, but I left them long and about 1/16 in. thicker than their final dimension. I set them aside and made a modified doweling jig with metal sleeves (inspired by the Kreg pocket-hole jig). This drilling jig consists of two parts: an angled hardwood block with a pair of holes drilled in it, each lined with a 2-in. brass nipple with 3/8-in. inside diameter (found in the plumbing supply section of hardware stores), and a plywood spacer that straddles the upright and keeps it in place while registering the angled drilling block between a series of spacers along its length.

To make the angled block, I laid out the hole spacing on a hardwood blank, and used a 9/16-in. Forstner bit in the drill press to drill a pair of holes through it. Then I ripped a 45° angle along the length of the block and crosscut it to the same width as the upright. I knocked in the brass nipples, using a few drops of cyanoacrylate glue to lock them in place.

To make the drilling spacer, I started with two long pieces of plywood on edge and a bunch of short plywood spacer blocks with one end cut at 45°. The spacers were all the same length and were cut to the same width as the uprights.

To make sure the spacing between sets of holes was consistent and easily repeatable from upright to upright, I started assembling the spacer at the top, gluing and pin nailing the first spacer block in place. Then I set the drilling block against the first spacer, butted the next spacer against it, and glued and nailed the second spacer in place. I repeated and worked my way down the line.

INSTALL THE UPRIGHTS

This is a finicky installation. The uprights have to be plumb, all the holes have to align across the uprights, and the spacing between the uprights has to be perfect so the angled dowels in the cases slide right in.

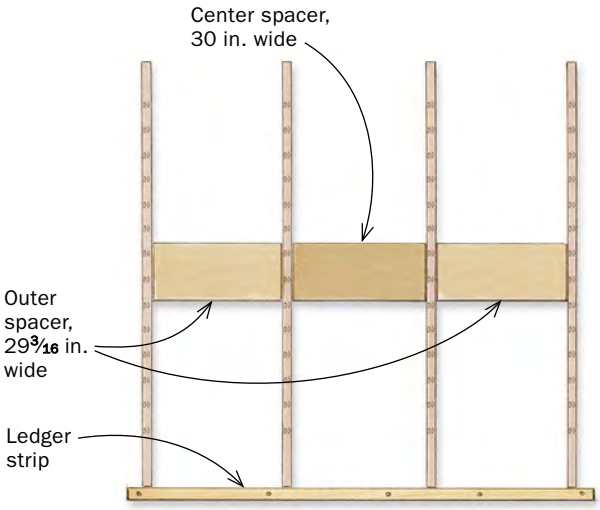

Start with a ledger strip. *Begin the installation by screwing in a temporary ledger for the bottoms of the uprights to sit on. It's vital that this ledger be straight and level.*

Install the uprights. *Working from left to right, install the first upright. Rest it on the ledger, and make sure it is perfectly plumb. Then use an MDF spacer to set the next upright in place, working from the bottom up. Have one of the finished cases to test the fit as you go. Work your way to the right.*

You don't need holes very close to the ceiling or the floor, so they don't have to start all the way at the top or go to the very bottom.

Once the drilling spacer was finished, I clamped it over the upright, lining up the bottom of the upright exactly with the top of the drilling spacer. This is important because when you're installing them, all the uprights will rest on a leveled ledger strip, automatically lining up the holes with each other. Set the drilling block in the first slot, and with a hand drill and a Kreg pocket-hole drill bit, drill a pair of angled holes through the uprights. Move the drilling block to the next slot and repeat up the length of the upright. Once all the uprights are drilled, run them through the planer to skim off 1/16 in. and clean up any tearout.

When it was time to drill holes in the boxes, I made two similar drilling spacers, mirror images of each other, to register the same drilling block on both sides of the case backs.

Make sure the uprights are anchored solidly

In second place for this project's difficulty prize is installing the uprights on the wall. Every home situation is different, so you'll probably use a combination of hitting studs, using wall anchors, or hitting the top plate. I made my uprights long enough so that I could hit the top plate on all four. On two of them I also hit studs, and on the other two I used wall anchors.

The boxes aren't too heavy, but once you load them with books and knickknacks they will be. If you aren't sure your installation will safely hold them you should hire a contractor to install the uprights for you.

In addition to securely anchoring the uprights on the wall, you have to place them precisely in relation to

each other to make sure that all the holes line up.

To make this as easy as I could, I did a few things. I cut MDF spacers to use between the uprights. I needed two because the distance between the outside upright to an inner upright is different from the distance between two inner uprights.

To start installing, I struck a level line close to the floor where I wanted my uprights to start. I screwed a long ledger along this line. Starting from the left, I registered my first upright on that ledger and screwed it in place, making sure it was plumb. I used the MDF spacer, a level, and one of the boxes with dowels glued in place to locate the next upright, making my way left to right. Then I arranged the boxes and shelves where I wanted them and loaded them up with stuff. The final product is large but amazingly light and airy at the same time. □

Anissa Kapsales is an associate editor.

HANG IT UP

Tolerances are tight on this whole project, and while the cases should go onto the uprights easily, you still have to line the dowels up with the holes.

The recessed back provides a good handhold. *Start with the case held above the holes you want to engage and slowly slide down until you catch the holes and push the case into place.*

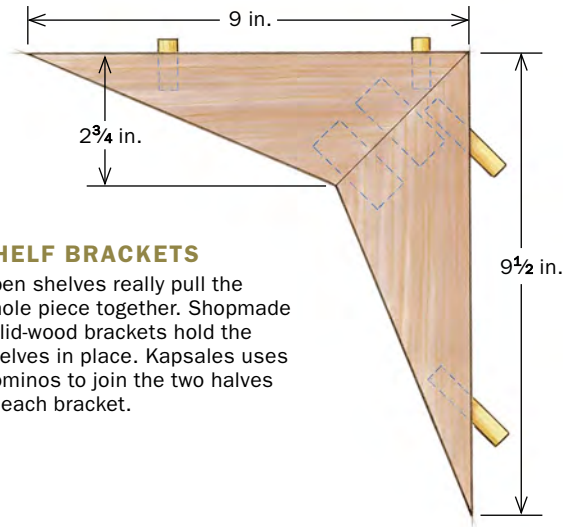

SHELF BRACKETS

Open shelves really pull the whole piece together. Shopmade solid-wood brackets hold the shelves in place. Kapsales uses Dominos to join the two halves of each bracket.

Install the shelves. *Place the brackets on the uprights first. The short dowels on the top edge locate the shelf and keep it from slipping. To install the shelf, line up the holes in its underside with the stub dowels in the brackets.*

Clamping blocks simplify the glue-up. *The author uses double-stick tape to attach triangular blocks on each side of the joint. The blocks help direct clamping pressure for a gap-free fit.*