# Sturdy Stool for

## Comfortable and quick to build, it fits the workbench or the kitchen island

I built this cherry stool with a leather seat to use in the kitchen, but to my wife's dismay I kept carrying it out to the shop—it turns out to be perfect as a bench stool when I'm chopping dovetails. I've also taken it with me when I do shows, where I need a seat that's comfortable all day long. It fits the bill for all three uses, and it doesn't take long to build.

I started by making a full-scale drawing, something I rarely do. I can visualize most rectilinear furniture in my head, but for chairs, which have few flat surfaces or right angles, a full-scale drawing is a necessity. Forty minutes with a piece of cardboard, and I had all the primary elements down: square tapered legs, round rungs, arched rails and, for comfort, a curved, upholstered seat. I gave the stool an overall height of 29½ in., which works well with our high kitchen counter and my tall workbench. As a rule of thumb, a seat should be 11 in. to 12 in. lower than its mating table or counter. So a stool for a 36-in. counter should be about 24 in. tall. To make the stool as comfortable as possible, I decided on an upholstered seat, but I sent it out to be upholstered. If you like, give it a try—it's not a complicated job.

### Make the legs first

I made the legs with straight-grained stock and tapered their inside faces. I used a shopmade tapering jig on the tablesaw, but cutting to a line on the bandsaw would also work. Once the legs are tapered, mark them on top so it's easy to keep track of which is which and how they are oriented. To give the stool a softer, less angular look, ease all four corners of the legs at this stage with a ¼-in. roundover bit on the router table. Then it's on to mortising for the seat-rail



Photos, except where noted: Jonathan Binzen

# Home or Shop

BY CHRISTIAN BECKSVOORT

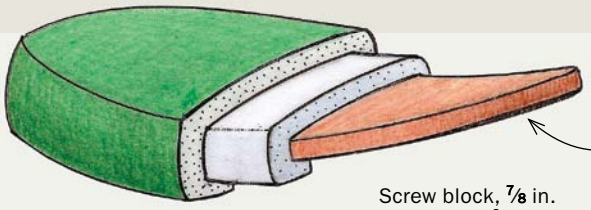


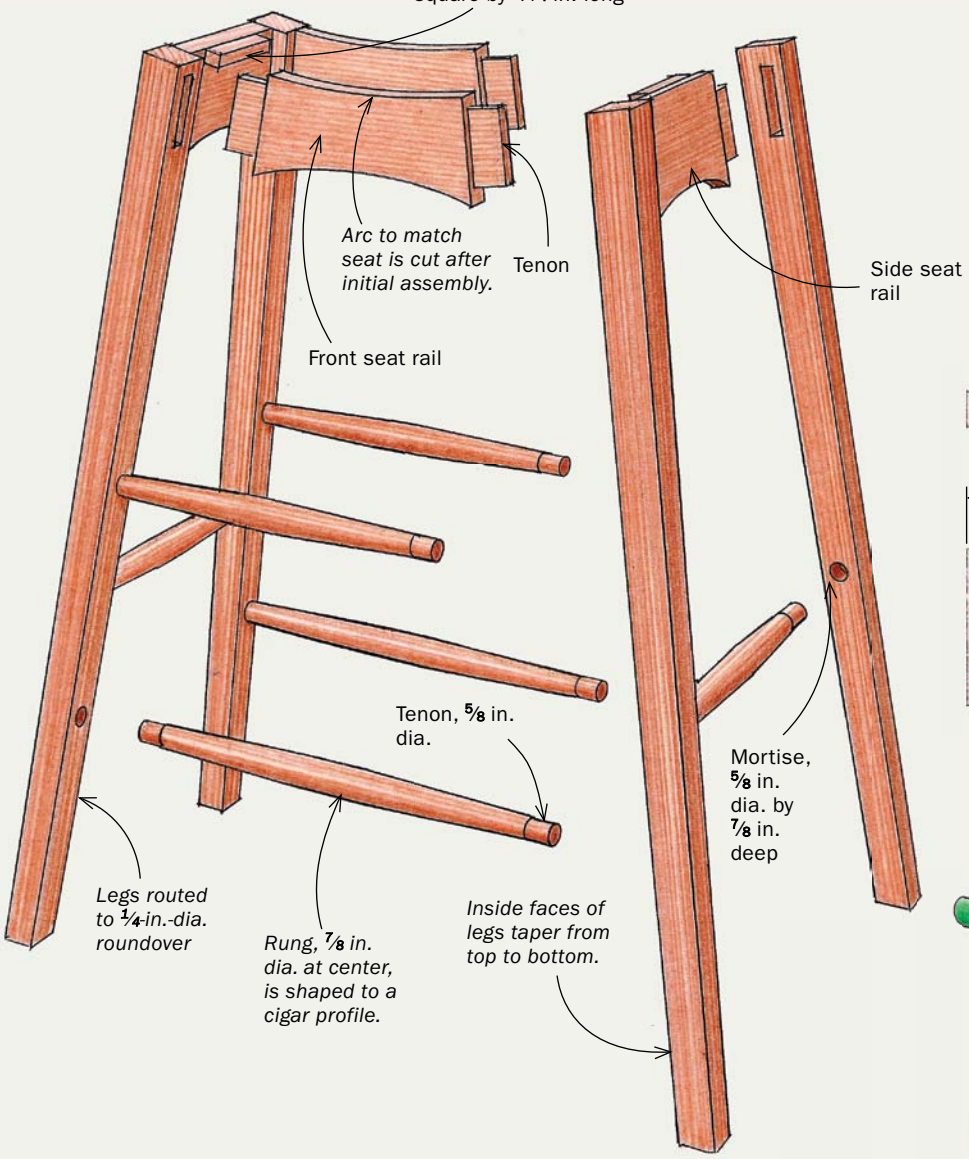


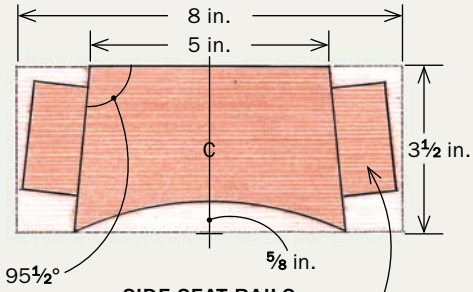


SIDE SEAT RAILS

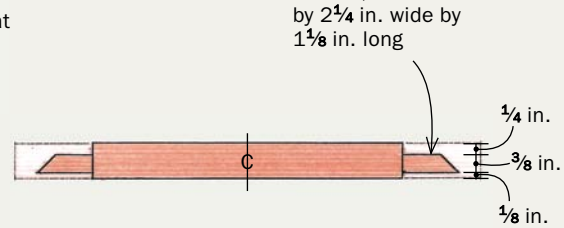


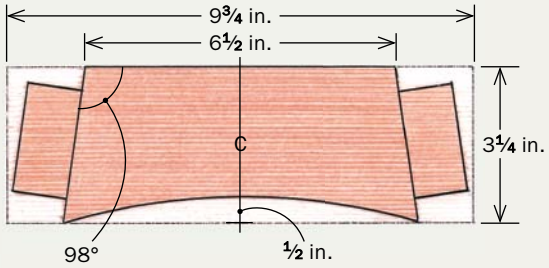


FRONT AND BACK SEAT RAILS

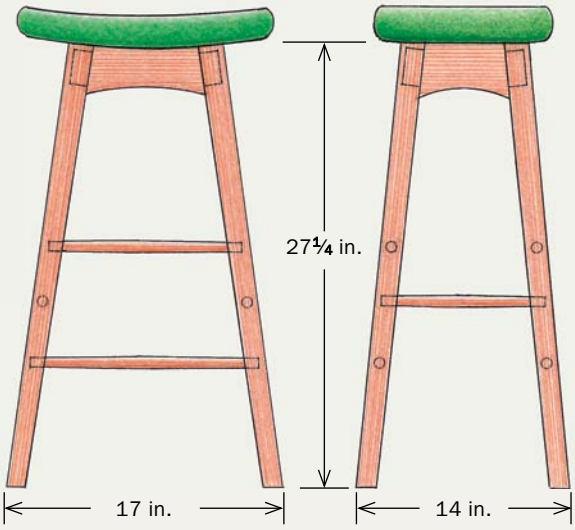


FRONT VIEW SIDE VIEW

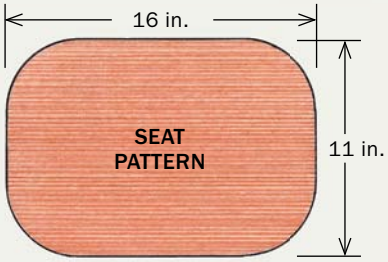


**BAR STOOL WITH UPHOLSTERED SEAT**

**With its square tapered legs, turned rungs, and arched rails, this stool is simple to build. Even the curved, upholstered seat is not that difficult to make.**

Drawings: Vince Babak

# Make and mortise the legs

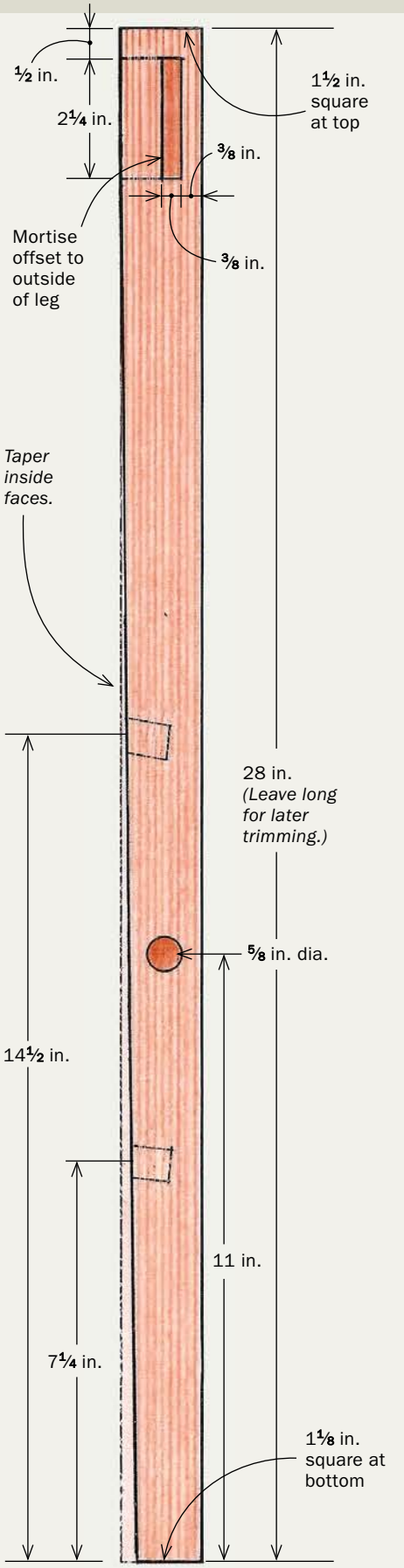


***Taper two sides.*** *Using a shopmade tapering jig, Becksvoort tapers the two inside faces of each leg. Then he cuts the mortises and rounds over the long edges of the leg on the router table.*

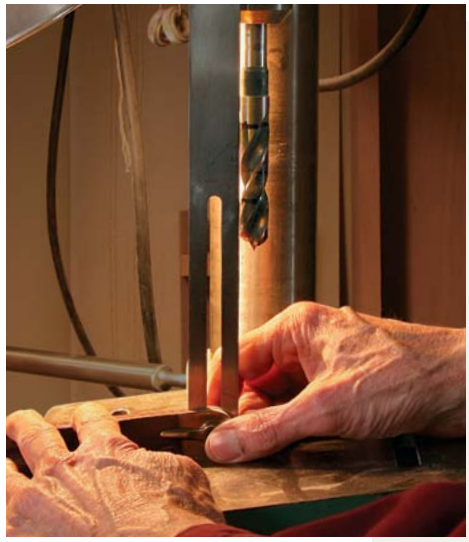

**DRILLING ANGLED MORTISES**

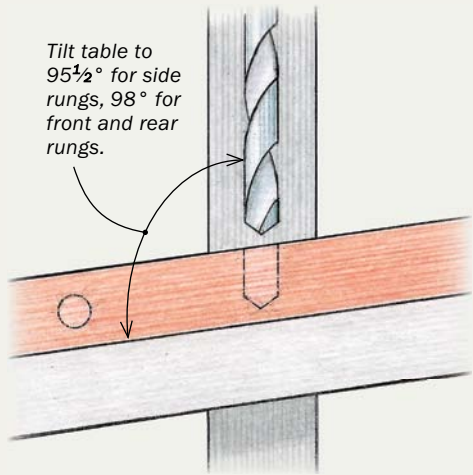


***From drawing to drilling.*** *After tapering the legs, cut the mortises for the seat rails and rout the roundovers. Then, to cut the angled mortises for the rungs, set a bevel gauge to the angle on your drawing, and tilt the drill-press table to that same angle.*

# Prep the seat rails

**CROSSCUT AT AN ANGLE**

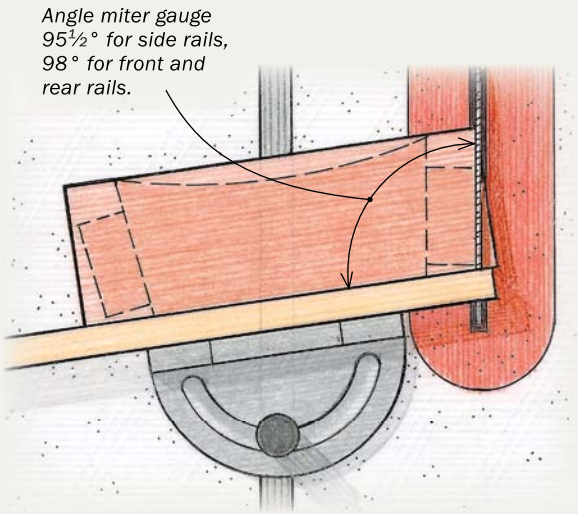



***End angles first.*** *Crosscut the seat rails with a miter gauge on the tablesaw. Then, with the blade lowered and the miter gauge at the same setting, cut the shoulders of the tenons.*

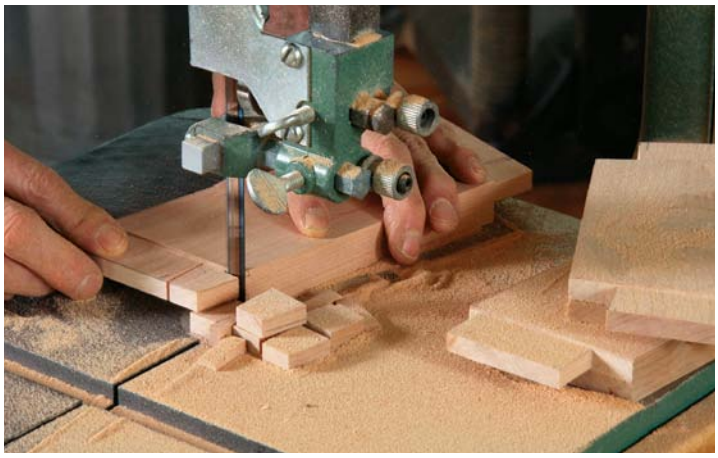

***Buzz the ends at the bandsaw.*** *Make the end shoulder cuts at the bandsaw and clean them up with a chisel if necessary. The tenons are offset toward the outside face of the rail.*

***A meeting of the miters.*** *With a block plane, miter the rail tenons so they don't contact inside the leg.*

tenons. I did this with my horizontal mortiser, but any other mortising method would be fine. Whichever technique you use, be sure to register off the outside—untapered—face of the leg, so that the face of the seat rail will be parallel to it.

I cut the round mortises for the rungs at the drill press, using a ⅝-in. brad-point bit. I tilted the table to match the leg-to-rung angle and drilled about ⅞ in. deep.

## Shape the seat rails

After milling the seat-rail blanks, make the angled crosscuts on each end. These angles produce the splay of the legs. Note that the side rails are cut at a different angle from the front and back rails for a less-pronounced splay. Once the angles are cut, you can cut the tenons, on the tablesaw, as I did, or by hand. The tenons intersect inside the leg, but I offset them toward the outside to make them as long as possible, and I mitered their ends with a block plane.

Next bandsaw the arc on the bottom edge of each rail, and fair the curve with files or a sander. The side seat rails have a tighter-

***Trace a curve.*** *You can use a flexible ruler in a bar clamp to reproduce the curve on the full-scale drawing and trace it onto the seat rails. The curves are then bandsawn and smoothed.*

# Turn and fit the rungs

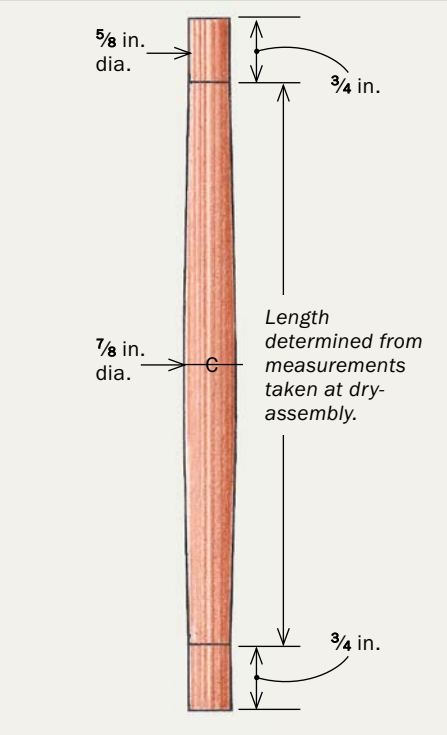


***Reality check.*** *Dry-assemble the legs and aprons and measure the length for each rung separately. Add 3/4 in. to each end for the tenons.*


***Tenoning rig.*** *With the rung blanks milled square and cut to length, Becksvoort uses a tenon cutter in the drill press to cut the tenons on each end. Alternately, you can turn the tenons.*

***Clever doughnut.*** *A scrap with a 5/8-in.-dia. recess drilled into it helps mount the rung on the lathe. The small, through centerhole seats on the lathe's dead center.*

***Make that rung a cigar.*** *After turning the square blank to a cylinder with a roughing gouge, use a smaller gouge to taper the rung to a gentle cigar shape.*

radius arc than the front and back seat rails. To speed things up, stack and tape together the pairs of rails for sawing and sanding.

## Tenon and taper the rungs

Dry-assemble the stool with a band clamp at this point, and take measurements for the rungs directly from the stool. The lengths should be close to what the drawing shows, but may be off slightly depending on how accurately the rail angles were cut. After milling the rung blanks to a bit more than 7/8 in. square, cut the three pairs of rungs to length, being sure to include 3/4 in. extra at each end for the tenons.

Next up is shaping those tenons. You'll be turning the rungs to their cigar shape, and you could also turn the tenons. But I often mill them with a tenon cutter chucked into the drill press. Then I put the rung on the lathe and turn it to shape. I fit one of the tenons into a three-jaw chuck. The other is held in a little adapter I made by drilling a 5/8-in.-dia. hole partway through a scrap of wood. A small hole centered on the 5/8-in. hole seats against the dead center, automatically centering the workpiece. I turn the rung to about 7/8 in. dia. at the middle, and taper it down from there to 5/8 in. at each end. If you don't want to turn the rungs, you can shape them by hand with a drawknife, spokeshave, and block plane.

## Prepare for the upholsterer

Although I didn't do the upholstery myself, I did make the substrate of the seat, a dished lamination of five pieces of 1/8-in.

# Create the curved seat

***Five-ply sandwich.*** *Five sheets of 1/8-in. plywood are clamped over a bending form to make the upholstered seat's substrate. Band clamps pull the plywood tight to the bending form. As an alternative, a vacuum bag could be used with the same bending form.*

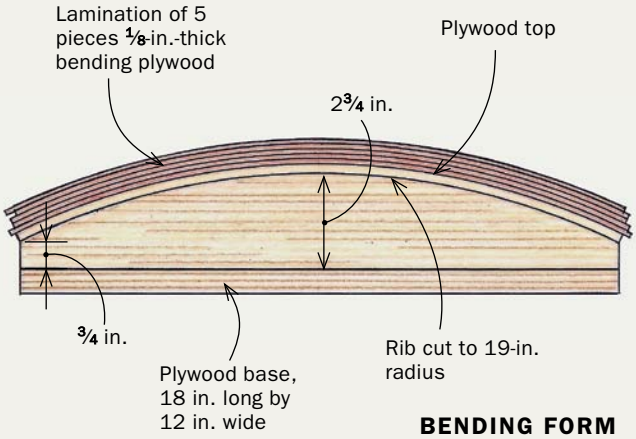


**BENDING FORM**

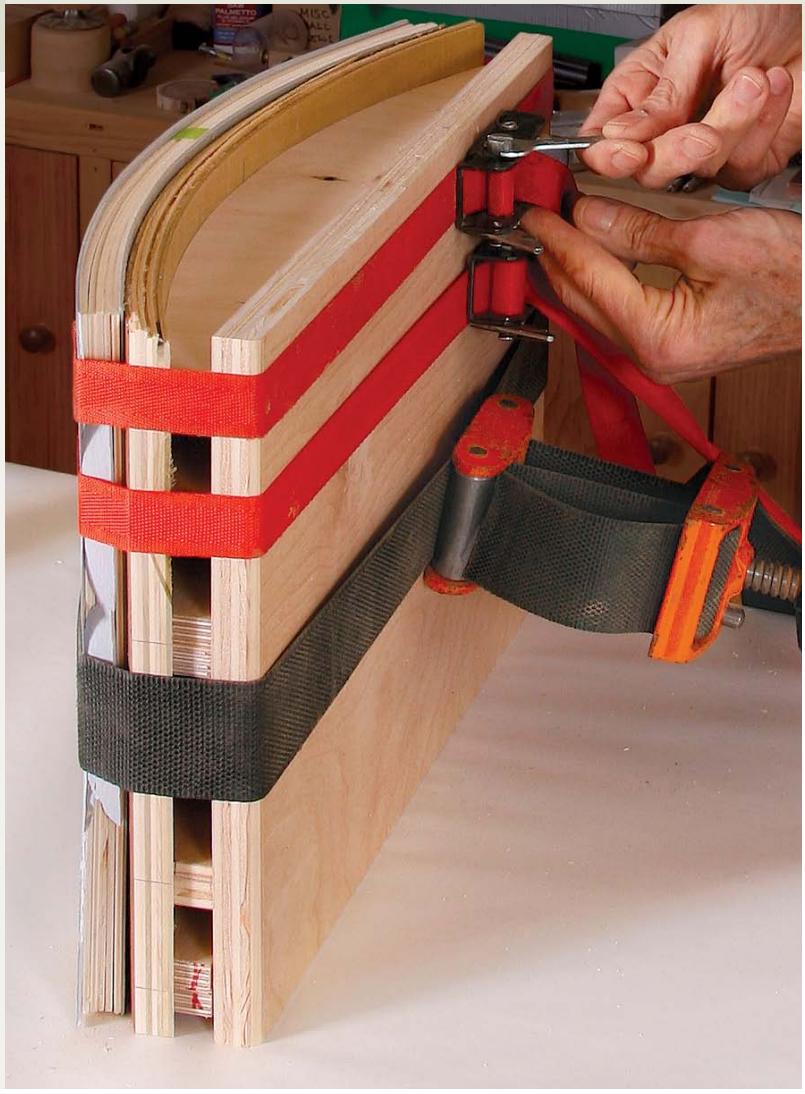

***Shaping the seat's perimeter.*** *Becksvoort bandsaws the bent-laminated seat to shape (left), following lines traced from a pasteboard pattern. Then he smooths the sawcuts with a disk sander. To ensure comfort and a smooth wrap of the leather, he uses a 3/8-in.-dia. roundover bit (above) to ease the edges around the top of the seat. Use a 1/4-in.-dia. roundover bit to radius the bottom edge.*

# Assemble in two stages

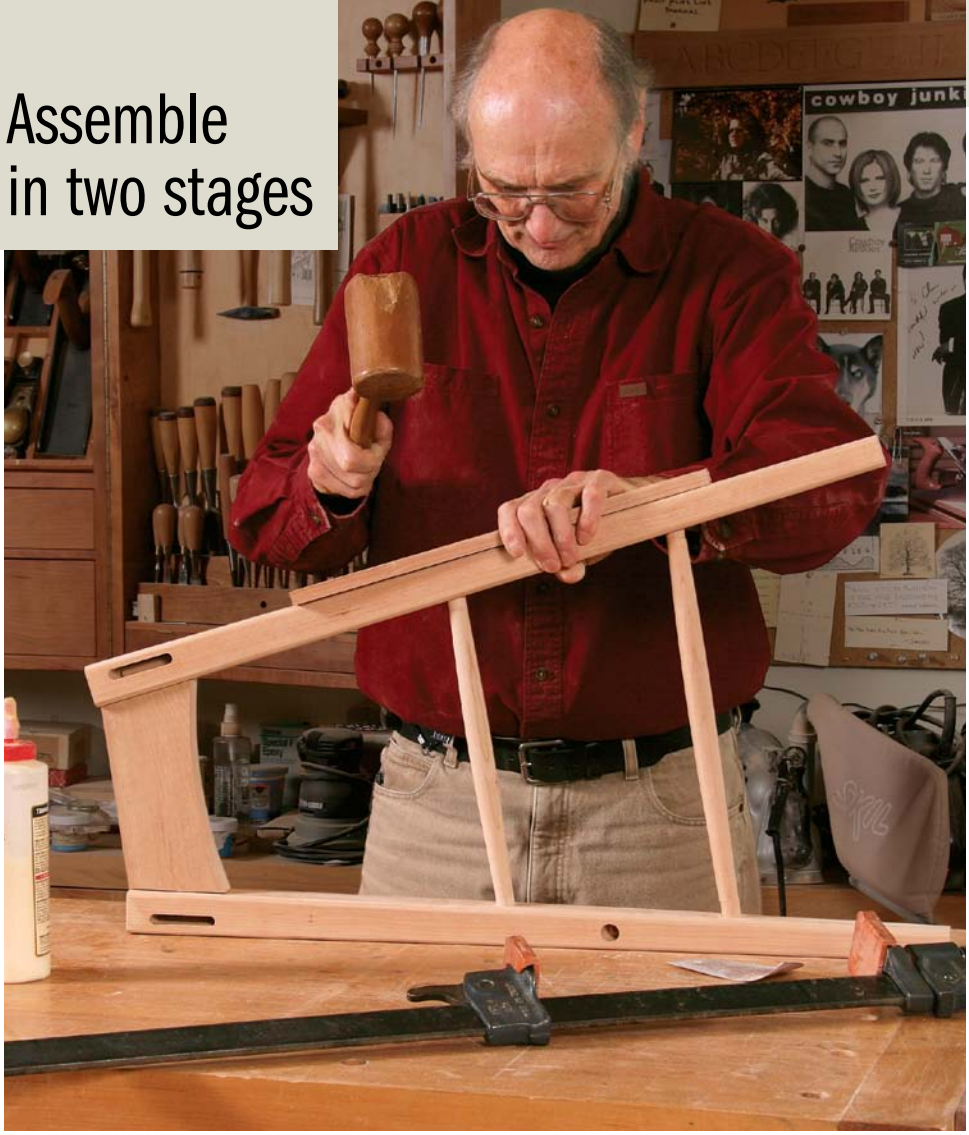

***First the front and back.*** *Glue up the front and back as separate units and set them aside to cure.*

bending plywood. I bent them to shape over a shopmade form, which has five ribs of ¾-in. plywood covered with three pieces of ¼-in. plywood. A vacuum bag would be excellent for this task.

To shape the seat, make a pattern with rounded corners from pasteboard. When the seat lamination is cured, place the pattern on it and trace around it. Then bandsaw to the line, round over the edges with a router, and sand the edges. Now it's ready for upholstering. My upholsterer used a bottom layer of 1-in.-thick dense foam, and a top layer of ¾-in.-thick softer Dacron foam. He covered them with leather, stretched and stapled in place.

This stool could also accept a wooden seat. Glue up a blank, bandsaw it out, and shape it with spokeshaves, rasps, files, scrapers, and sandpaper.

## Assembly in two steps

I sand all the parts to at least 220-grit at this point and assemble the front and back units. When they've dried, trace the curvature of the seat profile across the top of the rails and legs. Then, with the bandsaw table tilted to 5½°, cut along the pencil lines.

***The top edge must mirror the seat.*** *Trace the curve of the seat onto the legs and seat rail of the front and back units (left). With the subassembly riding inside face down, and the bandsaw table tilted 5½°, cut along the curved line for the scooped seat (above).*

***Dry-fit and draw a line.*** *With the side rails and rungs dry-assembled, mark the side rails where they protrude above the leg. Then disassemble and trim to the line at the bandsaw or tablesaw.*

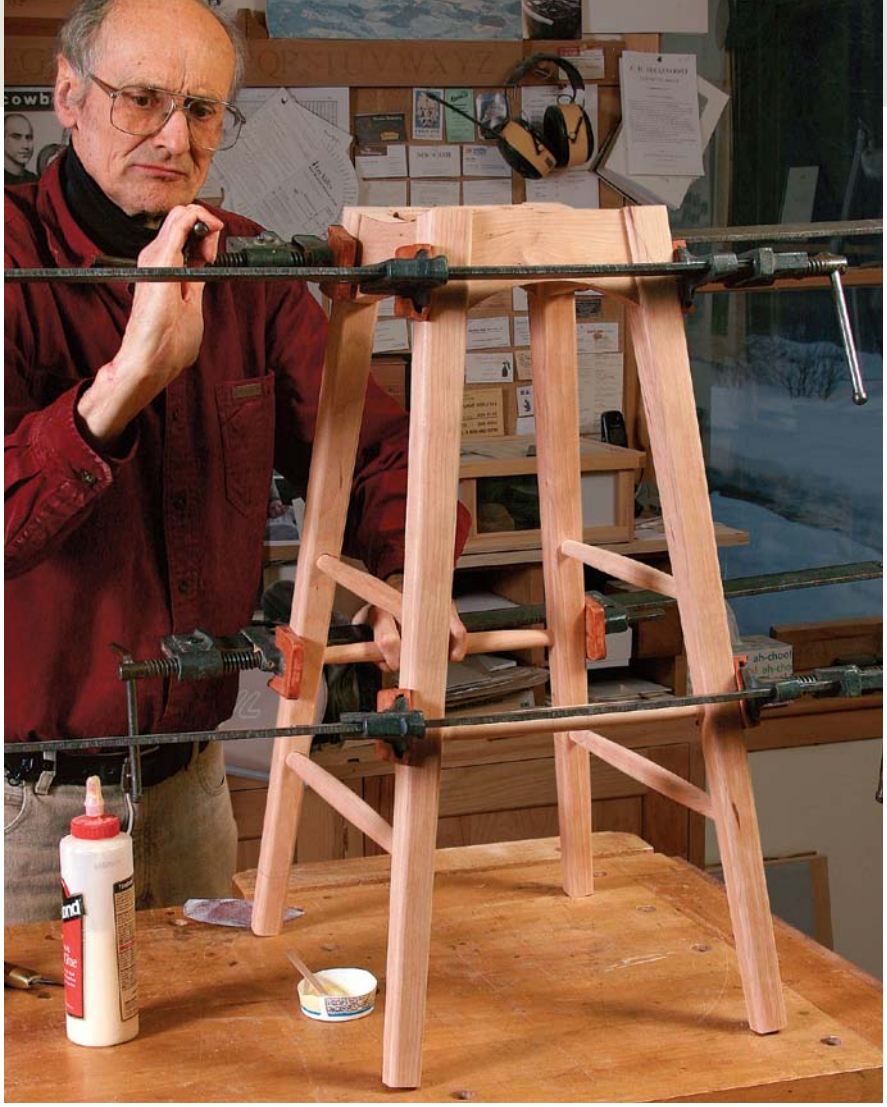

***The second gluing.*** *After attaching screw blocks inside the seat rails, do the final assembly of the stool.*

***Wobble check.*** *To eliminate rocking, trim all four legs in the same plane. Holding the stool steady on a flat surface, trace around each foot with a pencil held on its side and elevated on a scrap. Cut to the lines on the bandsaw, and follow up with rasps and files.*

Dry-assemble the side rails and rungs to the front and back units. You'll see that the side rails now protrude above the front and back legs. Mark the amount by tracing the curve at the top end of the legs onto the side rails, and then trim off the excess at the tablesaw or bandsaw. Glue screw blocks to the inside faces of the side rails, and you're ready for the final glue-up.

## The seat meets the base

When the seat lamination is cured, attach it to the base with screws driven through the screw blocks. Then stand the stool on a flat surface and mark around each leg with a pencil laid flat. Bandsaw to those lines, and rasp and sand out any irregularities.

Remove the seat to upholster it and to oil the base. Then add felt or rubber pads to the feet, if you like. When the upholstering is done, re-assemble, sit, and enjoy. □

*Christian Becksvoort has been making Shaker-inspired furniture in Maine for 40 years.*

***Done.*** *When the seat is upholstered, drive screws through the screw blocks to attach it to the stool's base.*

Photo, this page (right): Asa Christiana