House of doors. *Babbitt made all the raised-panel doors for his kitchen, bathrooms, and entertainment center using the methods in this article.*

Cope-and-Stick

Make perfect raised-panel doors with matched router-bit sets

BY RICHARD BABBITT

STILE BIT

This bit has the bearing on the top and cuts the decorative inside profile on all four parts of the frame. It also cuts the slot that holds the panel and houses the stub tenons.

PANEL-RAISING BIT

If you are just using a flat panel, you won't need this bit. And there are other ways to raise a panel. But this bit cuts into the front and back of the panel so it fits the groove perfectly.

COPE BIT

Also known as the rail bit, this is the small bit with the bearing in the middle. It cuts stub tenons and a coped profile on the end of the rails.

GOOD PREPARATION IS ESSENTIAL

These techniques will only work if all your stock is an even thickness, both rails and both stiles are the same length, and all the cuts are at 90°. Besides the four parts of the frame, you also will need a fifth piece for setup. Make this piece the same width and thickness as the frame, and about 8 in. long.

Photos: Mark Schofield; drawings: John Tetreault

Tricks

Rail-and-stile router-bit sets, also called cope-and-stick bits, work great—once you've spent a few hours dialing in the height of each bit and creating a pile of test cuts in the process. And since they don't have long, traditional tenons, gluing these frame-and-panel assemblies exactly square is no picnic either. Faced with the task of making frame-and-panel doors for our kitchen, bathrooms, and entertainment center, I developed an easy way to remove the trial-and-error from both operations.

My system needs only one extra rail, which is used to set the height of all three cope-and-stick router bits precisely. There are no further test cuts, no multiple setup blocks, and no fancy jigs. Likewise, once you know where to position the clamps, and in what sequence to use them, you get perfectly square frame-and-panel doors every time, in my case 89 times and counting.

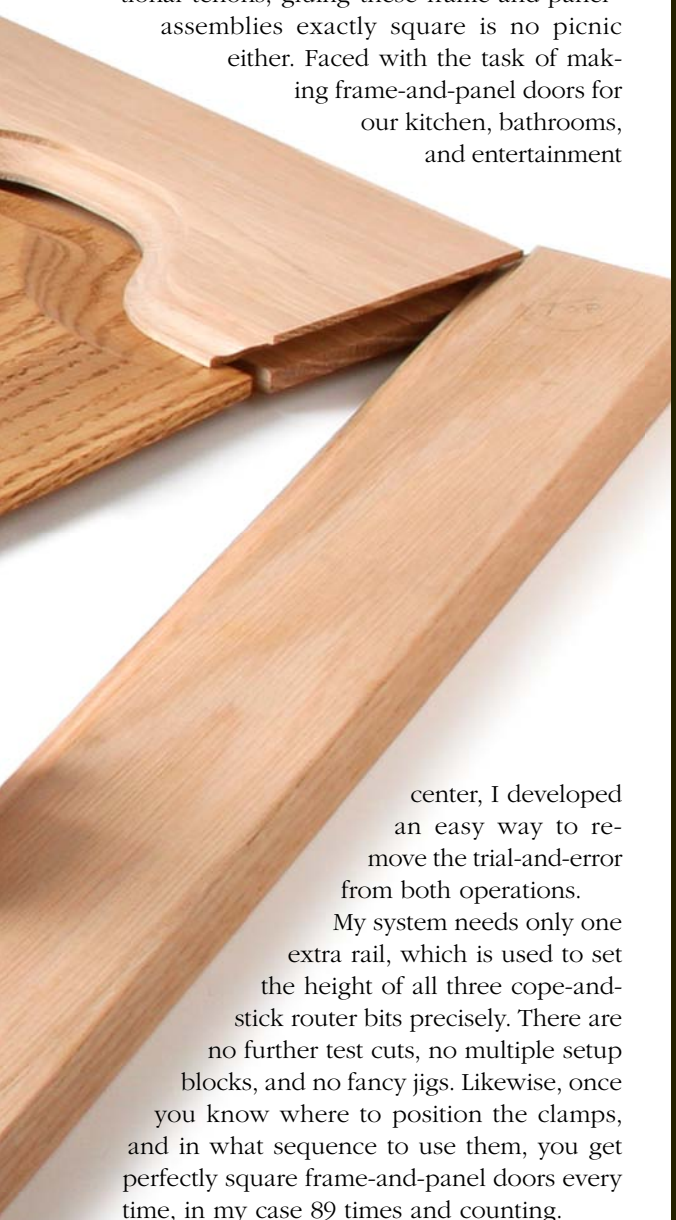

Richard Babbitt is an amateur woodworker on San Juan Island, Wash.

Online Extra

Watch a demonstration of simple cope-and-stick joinery at **FineWoodworking.com/extras.**

START WITH THE COPE BIT

Everything cues off this end-grain cut, so proper setup is important. Here's how to do it without test cuts.

Set the height first. *Use a straightedge or a strip of hardwood just less than ⅛ in. thick to set the height of the bit. Lay the edge on the router table and lower the bit until the profile portion just touches it.*

Then set the fence. *Place the straightedge against the cope bit's bearing and then lock the fence in the same plane. Keep the opening around the bit as small as possible.*

Cut the ends of both rails plus one extra. *You don't need a fancy sled to hold the rails square to the bit. Instead, cut a push block out of plywood or MDF with the corner nearest the router bit exactly 90°. Holding the rail stock facedown and tightly against both the fence and the push block, mill both ends of the rails and one extra setup piece for later.*

SETUP PIECE ALIGNS THE OTHER TWO BITS

There's no need for tedious test cuts. Use the extra piece with the coped profile on it to set up the stile bit and the panel-raising bit.

STILE BIT

Set the height. *Place the setup piece facedown on the router table and raise the stile bit until its slot-cutting section is exactly level with the tenon on the end of the rail.*

Mill the rails and stiles. *Bring the fence flush with the bearing. With the front face down, mill one edge of each stile and rail.*

Template-rout curved rails. *If your panel has a tombstone profile, use a matching template to rout the top rail. Use a climb cut to avoid cutting against the grain, which will cause tearout.*

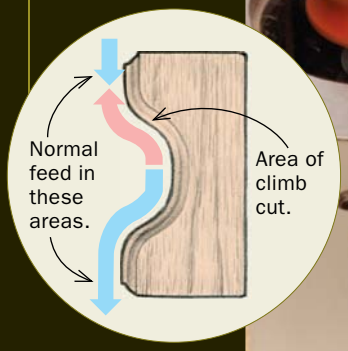

PANEL-RAISING BIT

Modify one end of the setup piece. *On the bandsaw, cut away the section behind the ogee profile as shown.*

Set the bit height. *The setup piece now fits under the back cutter of the panel-raising bit without hitting the main cutters. Lower the bit until the bottom of the back cutter just touches the rail's tenon. Save the setup piece for future use.*

Profile the panel. *It is better not to cut the profile in one pass, as this may strain the router and leave a rough surface. Instead, make the first one or two passes with the fence proud of the bearing and then align it flush for the final pass.*

TIP REMOVE BURN MARKS

If you get burn marks on the profile, sand the edge with 60-grit paper and make another pass with the bit.

Tips for assembly, too

With four parallel-jaw clamps, tightened in the right order, your frame and panel will come together perfectly. But before assembling it, apply at least one coat of finish to the panel. This way when the seasons change and the panel shrinks, you won't see a strip of unfinished wood. By the way, place the handles of each pair of clamps on the same side of the assembly.

1 POSITION THE CLAMPS

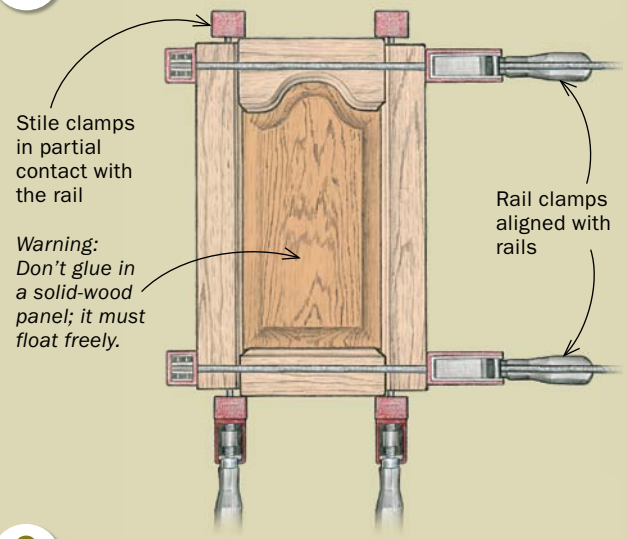

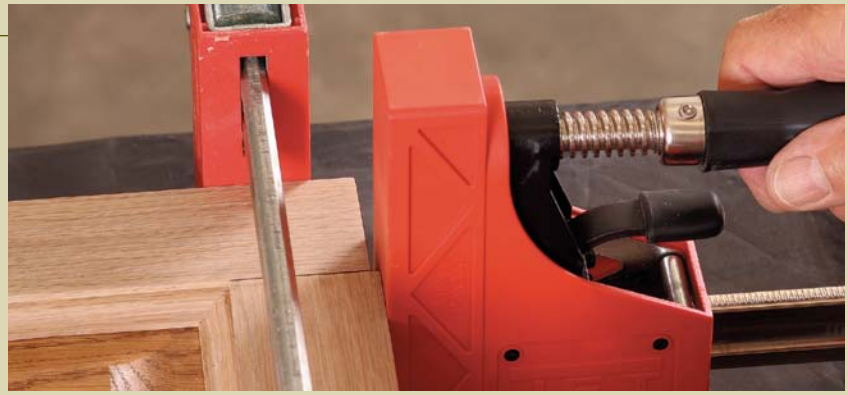

Do a dry run first. *Place the frame and panel inside the jaws of the stile clamps with the rails proud of the stiles by ⅛ in. to ¼ in. Leave a small gap between the end of the rails and the stile; this will prevent glue from being pushed toward the panel later. Align the stile clamps so that all but ¼ in. of each jaw is against the end of a stile. This will pull the rail perfectly flush with the ends of the stiles. Now place the rail clamps on top of the frame with the jaws aligned with the rails.*

2 TIGHTEN THE STILE CLAMPS

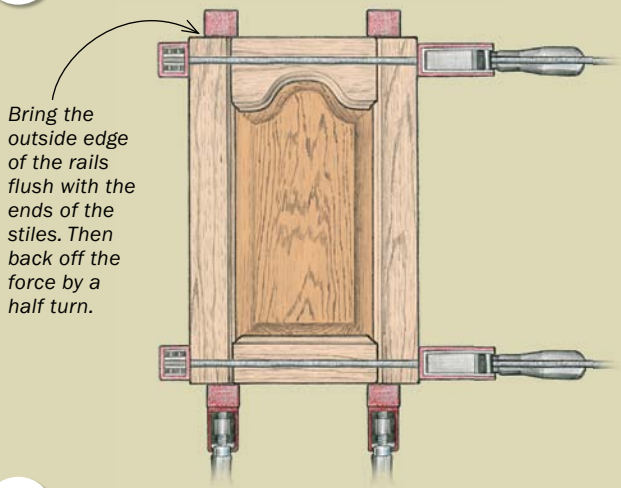

First tighten both stile clamps simultaneously and uniformly. *This will flush up the rails to the stiles. Next, back off both clamps a half-turn so that they are just snug.*

3 FINISH TIGHTENING AND CHECK FOR SQUARE

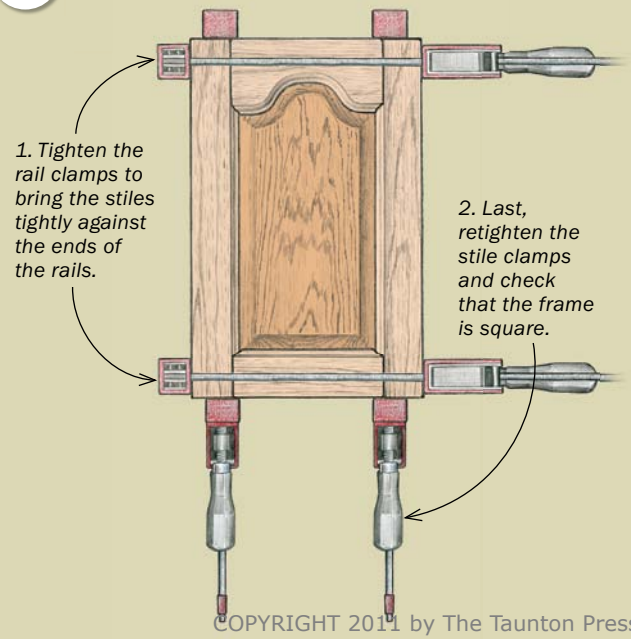

Tighten the clamps in sequence. *Tighten both rail clamps simultaneously and uniformly (left), then re-tighten the stile clamps. To see if the frame is square, measure it diagonally. When you have gotten the hang of this method, apply glue to just the ends of the rails. This way, surplus glue will be pushed to the outside of the frame and not to the inside, where it might stop the panel from floating.*