Build a Stout Workbench

Tail vise is at the heart of this versatile bench

BY CHRIS GOCHNOUR

I've done a fair amount of handplaning during my 32 years as a professional furniture maker, and I've found that the best way to secure a board for face-planing is between two benchdogs, which can be set below the board's surface so you can plane without hindrance. Clamps and holdfasts, by contrast, seem always to be in the way. And unlike a planing stop, dogs have no trouble holding the board in place when you plane diagonally or across the grain.

Benchdogs require a vise, and when I build a workbench, I like to locate that vise on the end. There are four options for an end vise: a traditional tail vise, a wagon vise, a metal face vise mounted on the end, and a twin-screw vise. All four can be used for face-

Versatile and effective. *A traditional tail vise excels at everything from face- and edge-planing to cutting tenons, a range that other end vises can't match.*

Heavy-duty workbench

With a strong base and a well-designed top, this bench is a streamlined workhorse. Equip it with a tail vise, and you're ready for just about anything.

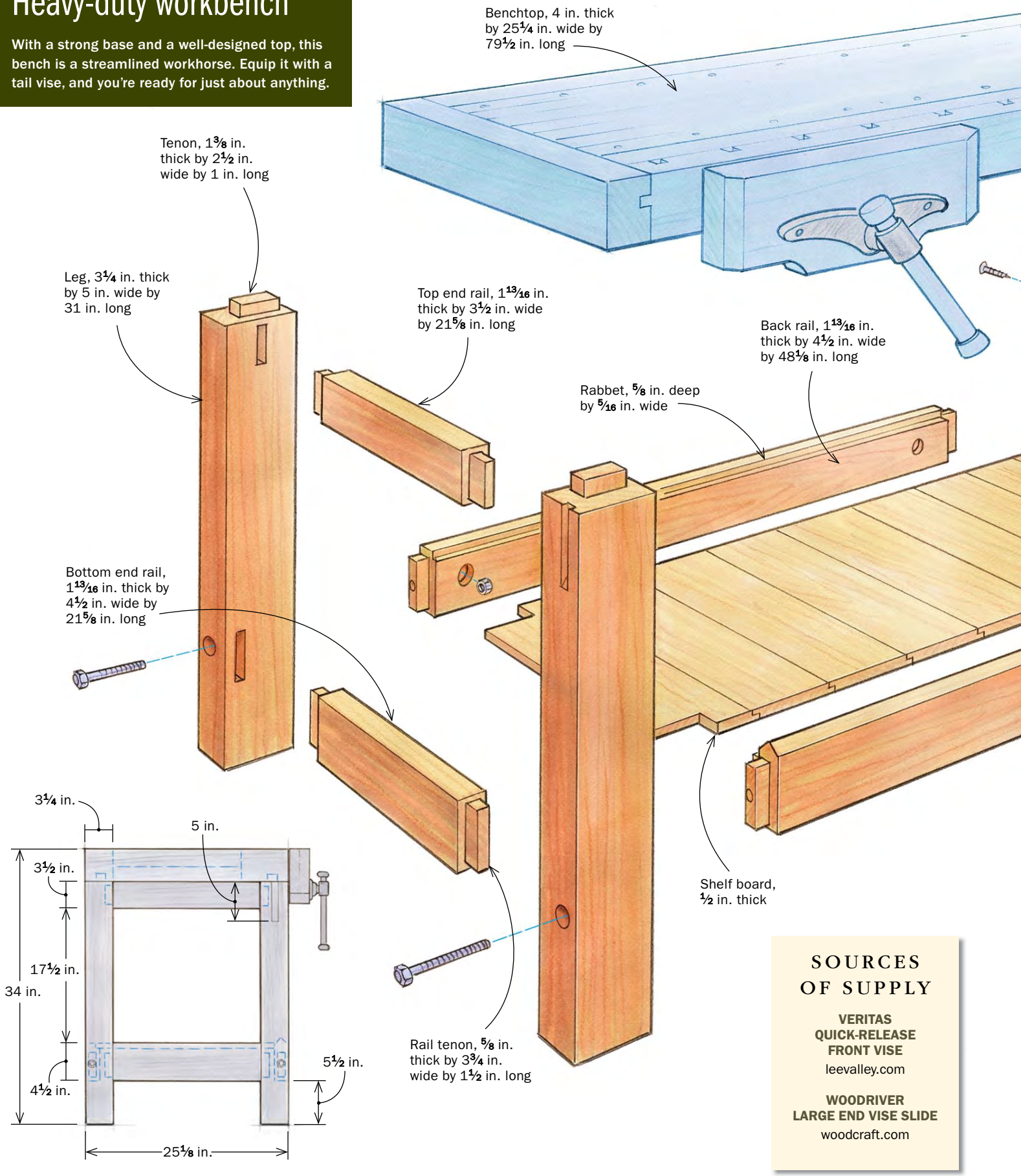

SOURCES OF SUPPLY

VERITAS QUICK-RELEASE FRONT VISE
leevalley.com

WOODRIVER LARGE END VISE SLIDE
woodcraft.com

Drawings: Dan Thornton

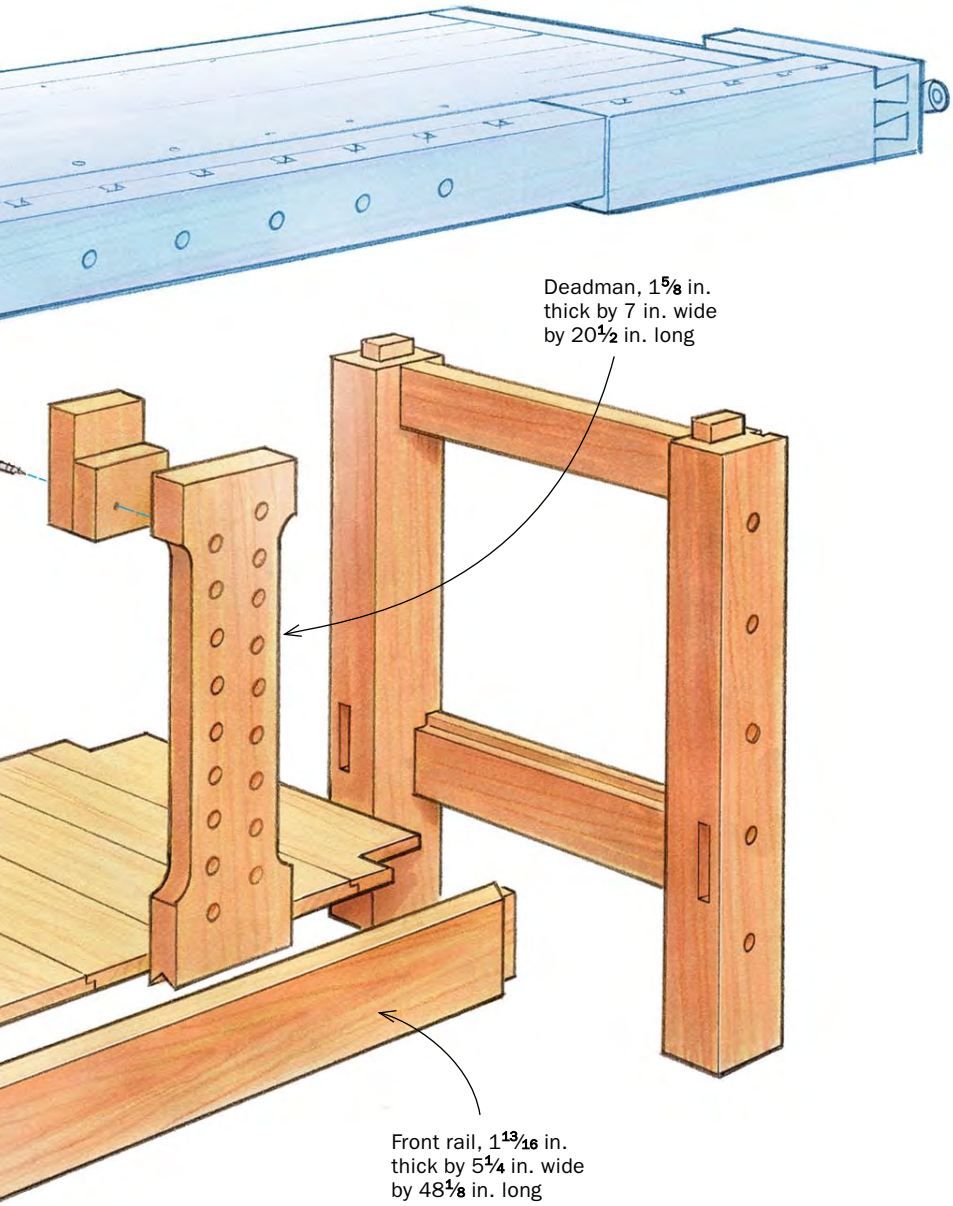

planing boards, but the tail vise has several advantages over the others. With a tail vise, the dog holes can be placed very close to the bench's front edge, which makes it possible to plane narrow boards with a plough plane or similar plane that has a fence that hangs below the benchtop. That's something that isn't possible with a steel vise. Wagon vises work great when the board is flat on the benchtop, but with a tail vise you can also clamp a workpiece vertically, which lets you cut tenons, for example. The fourth option, the twin-screw vise, handles tenons and edge-planing fine, but doesn't support work as well as a tail vise for face-planing. These advantages are why I chose a tail vise for my bench.

For many woodworkers, building and installing a tail vise seems intimidating, but it shouldn't be. I've installed quite a few, both on benches of my own and on student benches, and have developed a process that ensures the vise slides smoothly and doesn't snag. I'll show you how I do it.

The top is thick where it needs to be

Making a bench is a big undertaking, but fortunately most of the work involved is fairly routine. The base of this bench is four big legs joined to the rails between them with mortise-and-tenons. Shiplapped boards set between the lower rails provide a nice place for storing jigs and anything else you like to keep close by. I am going to skip over the base construction here, because the process is relatively straightforward, and focus instead on the top and the tail vise.

The benchtop is thick along the front and back edges but has a wide, thinner section between. The

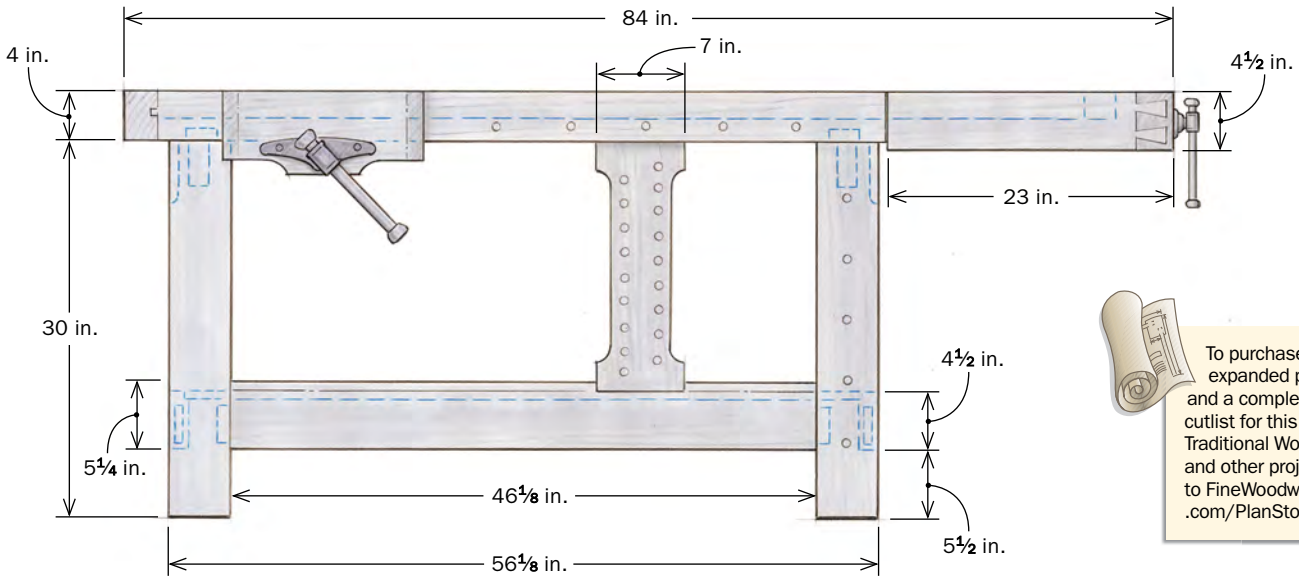

SIDE VIEW

Build a better benchtop

A top needs to be heavy and inflexible, but you can get that by combining a moderately thick center section with two beefy edges.

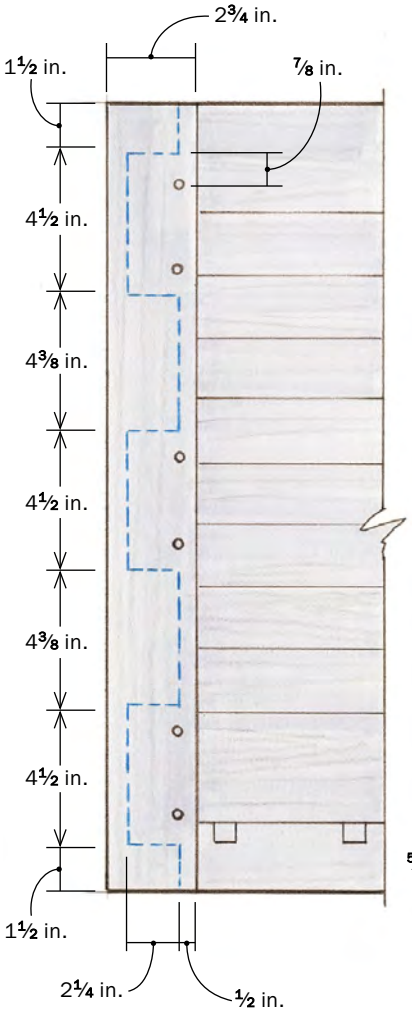

BREADBOARD, LEFT END
TOP VIEW

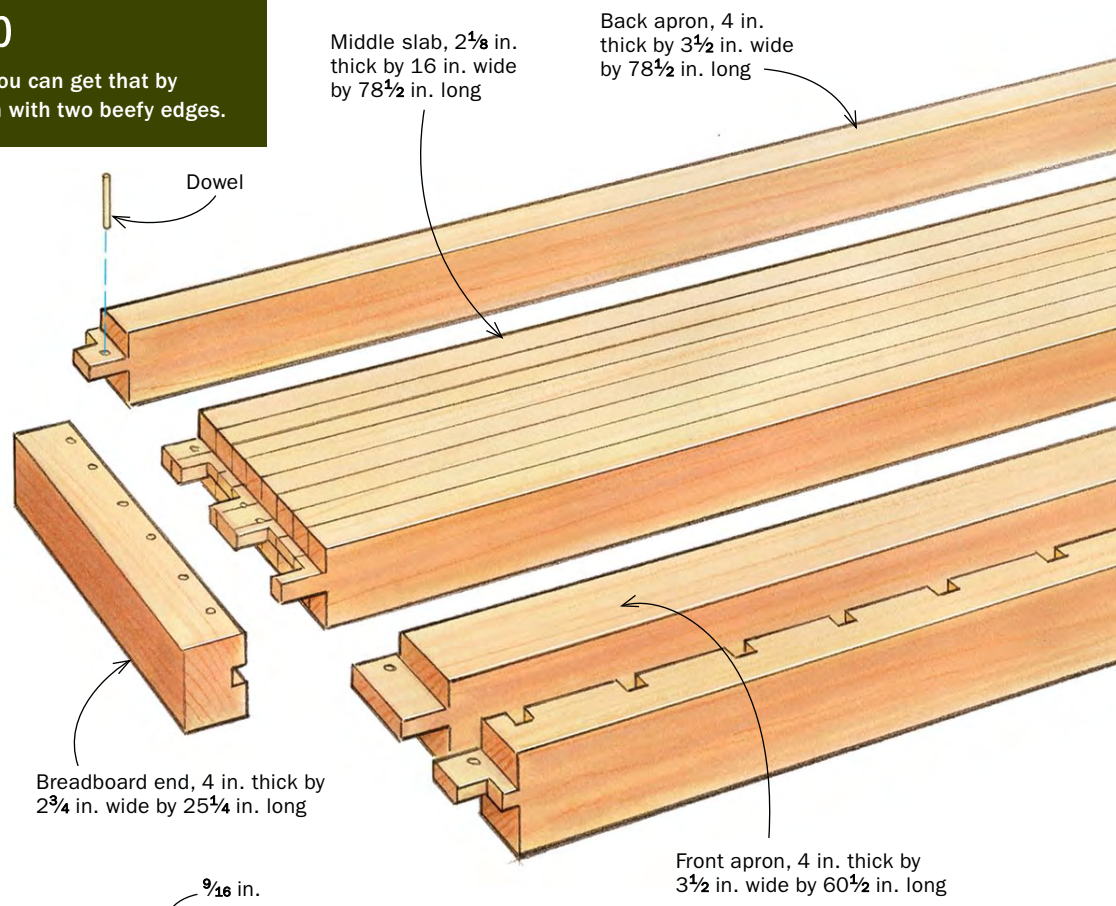

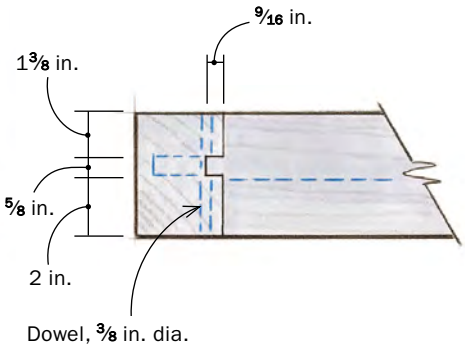

SIDE VIEW

middle doesn't need to be as thick, because all the pounding on a bench should be done over a leg or a top rail. This bench has a thick back apron, and a front section made up of a thick front apron and an equally thick dog board. Glue up the thinner middle section, and then mill the back apron, front apron, and dog board to their final dimensions.

Next cut the dog holes in the dog board. I do this in two steps. First I hog out the waste with a dado set at the tablesaw. Then I use a router and template to refine the hole and add a wider section at the top so

MAKE THE BENCHDOG HOLES

The dogs should angle inward. To make that happen, the dog holes in the benchtop slant 2° toward the vise; in the vise, they lean toward the benchtop.

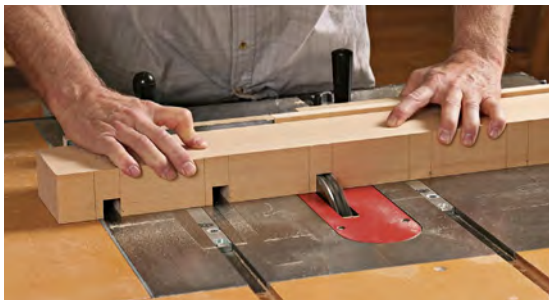

Cut angled dadoes. *Use a dado head and a miter gauge to remove most of the waste from the dog holes.*

Rout the final shape. *A template ensures that all of the dog holes are identical. Because the dog holes in the vise jaw face the opposite direction from those in the benchtop, Gochnour uses a template that has a pattern for both directions (left). The pattern has a notch so that a flush-trimming bit creates the pocket into which the dog's head fits (right).*

Photos: Matt Kenney

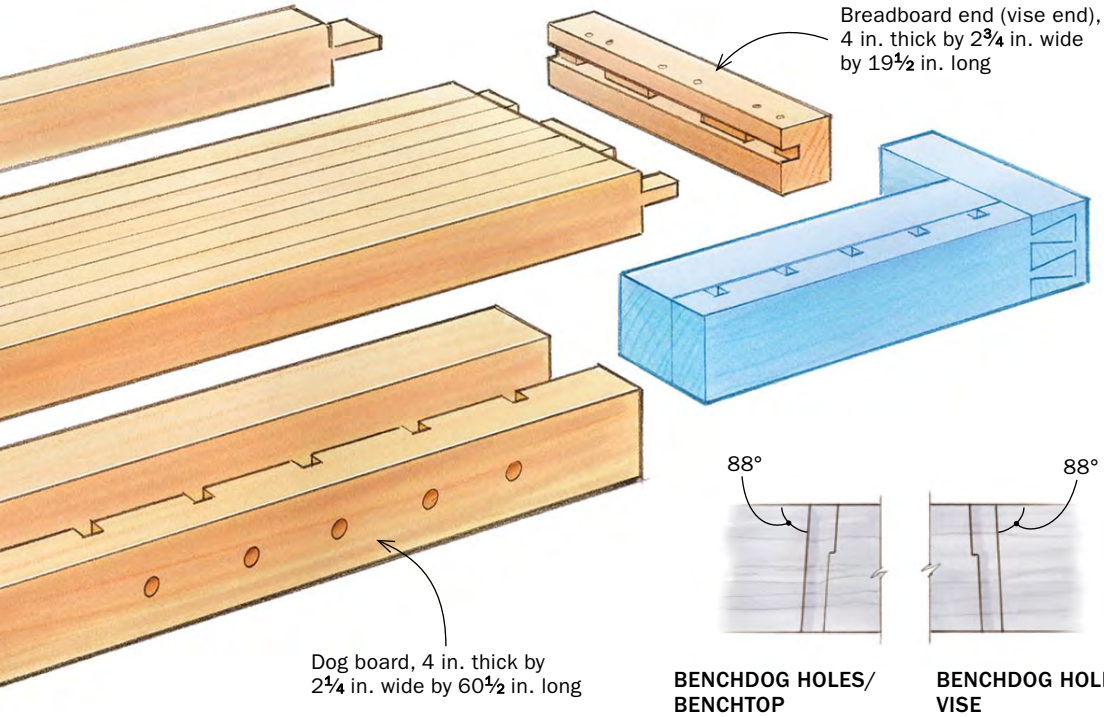

BENCHDOG HOLES/ BENCHTOP

BENCHDOG HOLES/ VISE

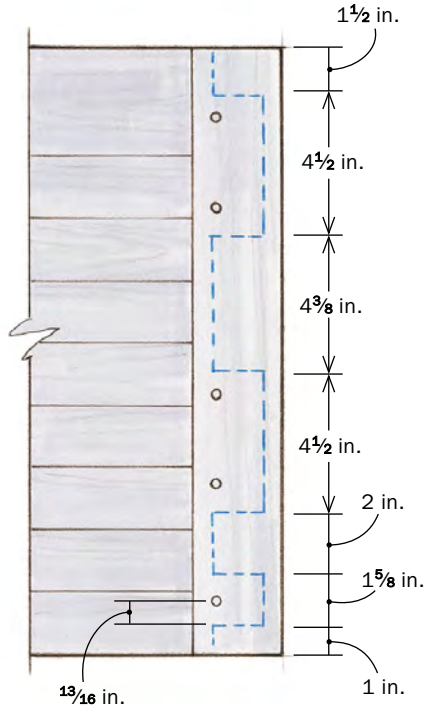

BREADBOARD, RIGHT END TOP VIEW

GLUE UP THE TOP

Glue the dog board to the front apron. *Spread glue only on the dog board, and keep the glue about ½ in. from the dog holes (far left). Gochnour uses Festool Dominoes for alignment and plenty of clamps, alternating them from top to bottom (left).*

Bring it all together. *A plywood spacer under the center section keeps it aligned with the thicker front and back sections. Be sure to add clamps above the top to prevent the thicker sections from slanting inward on the bottom.*

Add the tail vise

The success of a tail vise depends on how well the wooden jaw and metal hardware work together. Start with the vise's hollow core, which is the key to smooth operation.

BUILD THE CORE FIRST

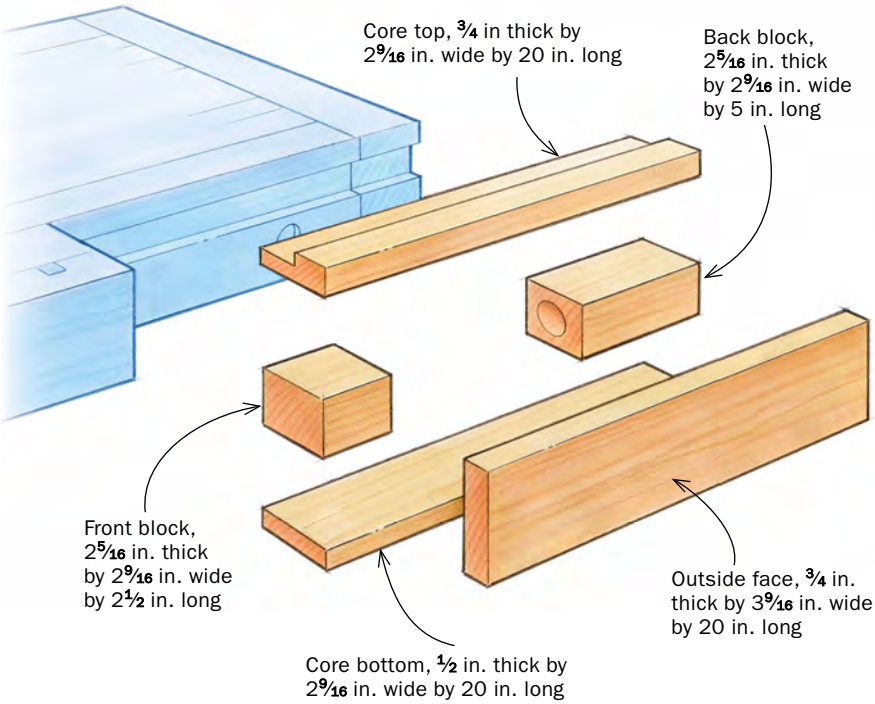

Cap the core. *After gluing the four pieces of the vise core together, glue it to the outside face, using a piece of melamine to keep them aligned.*

Cut a rabbet in the core top. *The easiest way to make this wide rabbet is with two cuts at the tablesaw. The vise's top slide fits into the rabbet.*

Slides are attached with bolts. *Clamp the slides to the core with the vise plate between them. Transfer the bolt hole locations from both slides and then drill the holes at the drill press, coming halfway in from both sides.*

that a dog, which has a head that's wider than its shaft, can fit completely into the hole. Cut the dog holes in the vise jaw at this time, too.

After you've completed the dog holes, glue the dog board to the front apron. Let the glue dry, and then glue the three parts of the top together. Give the glue a night to dry before installing the breadboard ends. You're done with the top for now. It's time to get busy making the tail vise.

Make the tail vise in stages

At the heart of this tail vise is some metal hardware. A vertical plate that holds the nut face-mounts to the benchtop. A pair of slides screwed to the wooden jaw grasp the plate. The screw goes through the jaw and threads into the top slide. The jaw has three parts: a

Make way for the vise screw. *It takes some serious clamping and an extender for the Forstner bit, but it is possible to drill the hole at the drill press. A fence on the drill-press table helps keep the vise core plumb.*

FIT THE CORE TO THE BENCH

Attach the hardware to the bench, and get the vise core riding smoothly on it before you go any further with the vise construction.

Groove the top. *Two passes with a rabbeting bit create a slot into which the top slide fits.*

Mortise for the nut. *The vise screw's nut has a threaded stud that passes through the vise plate. A nut that secures it from behind the plate fits into a shallow mortise. Clamp a straightedge to the benchtop and register the vise plate against it. Transfer the hole to the bench (left). Drill the mortise with a Forstner bit (right).*

Screw on the vise plate. *Use a Vix bit to center a pilot hole for each screw, and then drive the screws. Make sure the screw heads sit below the surface of the vise plate.*

Assemble in place. *Gochnour bolts on the slides while clamps hold the vise core snug against the vise plate. Threaded up from the bottom, the bolts are still accessible after the vise is complete.*

Check the glide. *Now's the time to test how well the vise slides. You can trim the rabbet if it's too loose, or add a shim under the bottom slide if it's too tight.*

Tail vise continued

With the hollow core complete, add the dog board, top plate, and end cap to finish the jaw.

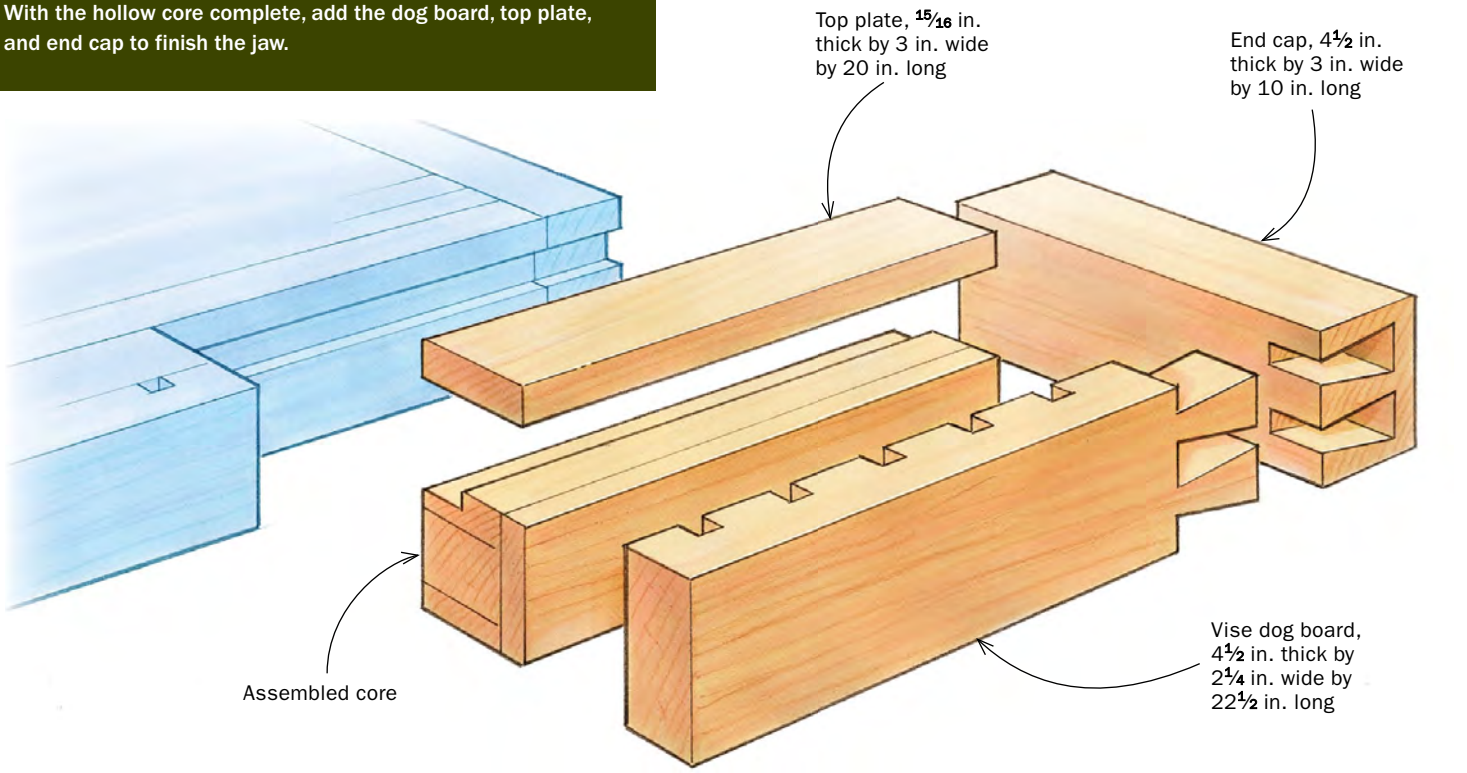

DOVETAIL LAYOUT

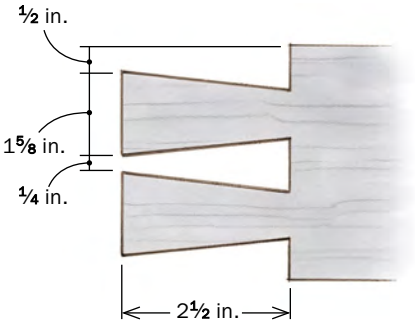

Dovetail the corner. *This is the traditional way to join the end cap and dog board. It's strong and looks great.*

Add the core. *Keep the glue away from the dog holes (right). When clamping, use a caul to bridge the hole in the vise core (far right).*

Glue on the top plate. *It should sit about 1/16 in. above the benchtop. Gochnour uses a Festool Domino to strengthen its connection to the end cap (above). Apply clamping pressure both side to side and along the plate's length (right). Then add clamps for top to bottom pressure.*

hollow core, the vise dog board, and the end cap. Because the vise's success rides on how well you join the hardware to the core, it's best to start there. Get it right, and then add the dog board and end cap.

The core begins by gluing together four parts: a top and bottom, and a front and back block. A large space in the middle accommodates the vise screw and nut. After the glue has dried, add the outside face to the core. What you have now is akin to a box without a lid. Take it to the drill press and drill a clearance hole through the back end for the vise screw. Next, cut a rabbet in the core top. The vise's top slide fits into this rabbet. Clamp the two slides, with the mounting plate between them, to the core, and mark the holes where the bolts go through the bottom slide and thread into the top slide. Unclamp the slides and drill clearance holes for the bolts.

Now mount the plate to the benchtop and install the vise core on the plate. Give it a slide. If it's too loose, take a shaving or two from the rabbet and try again. If it's too tight, shim the bottom slide. When the core glides smoothly, move on to the dog board and end cap.

The dog board gets a few dovetails; the end cap gets the pins. After you've cut and fitted the joint, but before you glue the two parts together, drill a hole through the end cap for the vise screw. Then cut slots for the slip tenons that join the end cap to the core and top plate. Glue the jaw and end cap together and then glue that assembly to the vise core. The last step in making the vise is to glue on the top plate.

You're ready to mount the completed vise. Check how the jaw closes against the bench. Use a bevel-up plane to shave the jaw's end grain until the vise closes nice and tight. Finally, plane the tail vise flush to the benchtop. Now you can get to work. □

Chris Gochnour is a contributing editor.

Install the vise. *Hook the top slide over the vise plate, put the bottom slide in place, and then bolt them together.*

Make it flush. *After refining the end of the jaw so that it closes tightly against the bench, plane down the tail vise level with the benchtop.*