The Pegged Joint, Exposed

Showcase and strengthen mortise-and-tenon joints

BY MATTHEW TEAGUE

I seldom cut mortises and tenons—whether in doors, leg-to-apron joints, or on breadboard ends—without pegging the joints. Driving a wood peg through a mortise and tenon not only strengthens the joint, but it also adds a decorative element that I've come to depend on in most of my designs. Because I lean toward joinery that is honest and exposed, using pegs makes the construction process transparent. If you see pegs, you can bet that they're more than ornamental, and you can tell at a glance how the piece is held together.

Reinforcing a joint in this manner involves driving a hardwood peg through the mortise and tenon (though I've seen the same technique used on other types of joinery, including box joints and dovetails). Structurally, the peg strengthens the mechanical connection between mortise and tenon—often to the extent that glue isn't necessary. Aesthetically, the peg can add a subtle or bold detail to your work.

Most of the time, I drive pegs into a mortise-and-tenon joint that has already been assembled. But with proper planning, pegs also can be integral to the assembly process, exerting their own clamping pressure. This method, called drawbored pegging, calls for some

Layout and design

LOCATE PEGS SMARTLY

Wood pegs create tenacious mortise-and-tenon joints that will never pull apart. For maximum strength, be sure there's sufficient tenon stock above and below the peg as well as toward the front of the tenon. Leaving too little wood in these areas could result in a split when the joint is stressed.

IN FRAME JOINERY

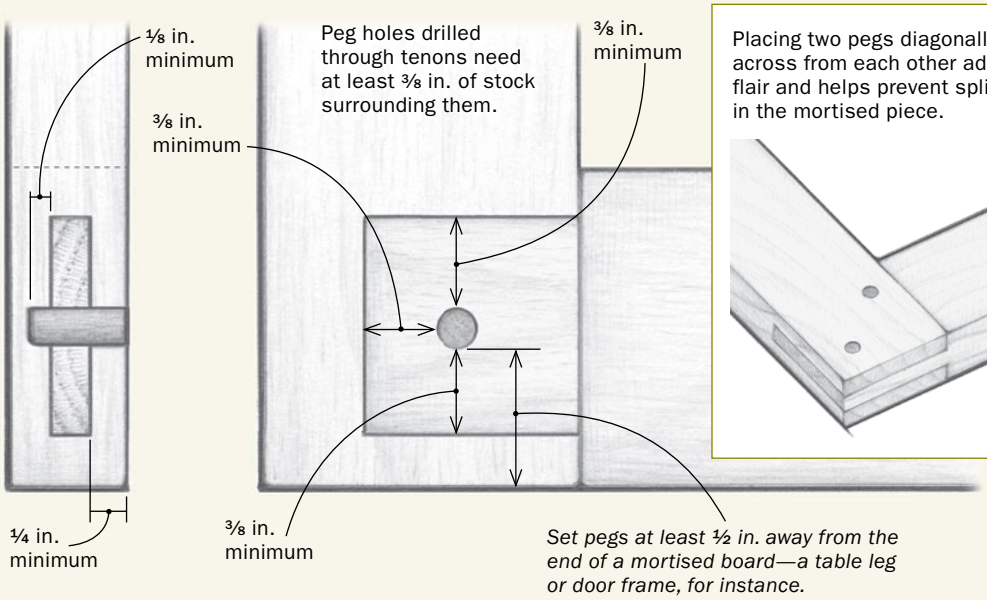

Placing two pegs diagonally across from each other adds flair and helps prevent splits in the mortised piece.

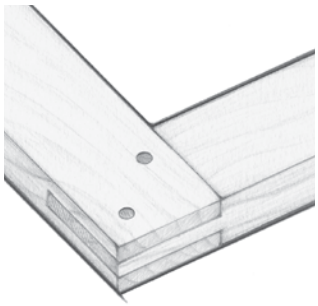

IN APRON-TO-LEG JOINERY

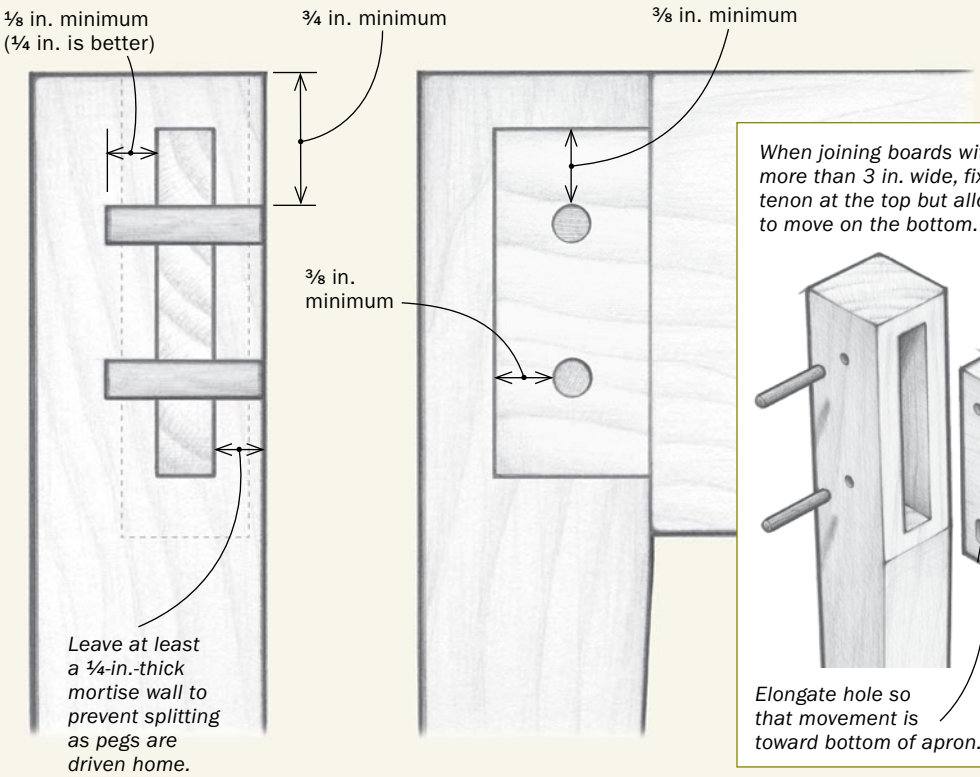

When joining boards with tenons more than 3 in. wide, fix the tenon at the top but allow it to move on the bottom.

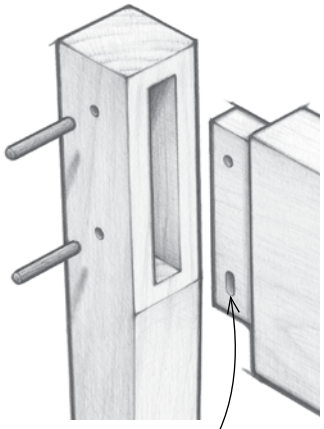

Elongate hole so that movement is toward bottom of apron.

A PALETTE OF PEGS

Against a cherry backdrop, you can see the stunning effects you can achieve by varying the wood, shape, and size of the pegs.

Photos, except where noted: Thomas McKenna; this page: John Tetreault; drawings: Christopher Mills

Pegged-joint basics

Driving wood pegs into mortise-and-tenon joints adds strength and visual appeal to furniture. Typically, the joint is glued up before pegs are installed, but you don't have to wait for the glue to dry before adding pegs. You might want to leave the clamps on, though.

Mark out the peg locations. *Draw the outline of the tenon on the mortised stock. Locate the pegs' center points, then define them with an awl so that the drill bit won't wander.*

Drill peg holes. *Attach a tape "flag" to the drill bit, and stop drilling when the flag knocks the chips away. Drill perpendicular to the workpiece to avoid tearout.*

Buy pegs or make your own

You can buy dowel stock for pegs, but you'll have more design options if you make your own from hardwood scraps in your shop or from purchased pen blanks, which come in a variety of exotic species (see Sources, below). Start with a ¾-in.-sq. blank. Set the tablesaw fence and the blade height based on the size of the pegs you're cutting. If you're making 3⁄16-in. pegs, set the fence to 3⁄16 in. but leave the blade height just shy of 3⁄16 in. Using a push stick at the end of each cut, rip along each corner of the blank, adjusting the blade height until only a sliver holds each corner together (top photos, right). Eventually, you'll be able to peel away the strips. To make round pegs, place the square strip in a V-grooved trough and plane away equal amounts of stock at the corners (bottom photo).

SOURCES OF SUPPLY

Hardwood dowels and pen blanks

www.rockler.com
www.woodworker.com
www.woodcraft.com

Square pegs on the tablesaw. *Set the fence to match the peg width and set the blade height to just under that measurement. Use a push stick at the end of each cut, and raise the blade until only a sliver of material holds the peg stock to the blank. Then peel away the strips.*

Make 'em round if you want. *With the blank set in a V-grooved trough, use a block plane to remove the corners, rotating the blank as you go.*

Photos, this page (bottom left): John Tetreault

Drive pegs home. *The pegs will go in easier if you chamfer the bottom edges (inset). Use a metal hammer to drive in the pegs. Stop when the hammer tone deepens; it means the peg has bottomed out.*

drilling and layout work before assembly (for details, see pp. 44-45). Both methods make for bombproof joints, and the techniques are relatively simple.

Let the furniture dictate the peg form

Pegs can be designed to suit most furniture styles. For starters, you can make them round, square, flush, or even proud and faceted (for an assortment of peg styles, see the photo on p. 39). Then there is the species of wood. Because the end grain of the pegs is exposed and will darken with an applied finish, they will offer contrast in some form. For a more subtle appearance, cut the pegs from the same primary wood you're using on the project. To pump up the contrast, choose pegs of a darker or lighter species. I often use walnut to add a darker accent to cherry designs. Ebony is dense and strong, and the near-black color offsets mahogany or walnut well. On occasion, especially if I want a more contemporary look, I'll use pegs of a lighter color: holly pegs in a mahogany door, for instance.

Regardless of your design, choose a dense and strong hardwood peg that is as strong as, or stronger than, the material you are pegging. On a few occasions, I have pegged joints with a softer

TRIMMING PEGS FLUSH

1. *Use a handsaw to trim the peg almost flush. Place a shim under the saw to protect the workpiece.*
2. *Dampen the peg with water, then mash it a few times with a hammer, causing the head to mushroom slightly. The water softens the fibers and mashing helps spread the peg to fill any gaps.*
3. *Pare the peg flush using a chisel. Rest the chisel flat on the worksurface. Slowly work your way around the outside of the peg and toward the middle to avoid tearout as you finish the cut.*

Square pegs stand out

Square pegs can add visual interest and are often appropriate stylistically, as in Arts and Crafts furniture. After drilling the peg holes (see p. 40), square up the top third of each hole.

Use a chisel that matches the peg width. *Create a square opening at the top of the hole that tapers down about half the depth. A combination square will help guide the chisel at the start of the cut.*

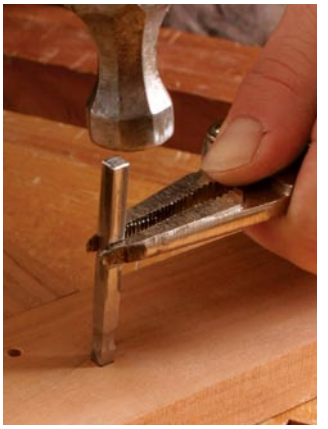

Square holes in a jiffy. *A punch made from key stock available at hardware stores can be used to square up holes. Match the stock to the width of the pegs, and grind it as shown. Tap the tip into the hole (right) until you reach the relieved section, using pliers to keep the punch steady.*

wood, but in these cases the pegs are simply a design element—not a means of strengthening the joinery.

Maximize strength without sacrificing appearance

There's more to pegging a joint than the appearance. It's also important to get as strong a mechanical connection as possible. A few factors come into play here: the size, placement, and number of the pegs.

Without calling in the engineers, you can determine the size of the peg by considering the joint you're reinforcing and the desired effect. In general, I use pegs between 3⁄16 in. and 3⁄8 in. dia. That said, even smaller decorative pegs of 1⁄8 in. dia. would not be out of place on a delicate box, and 1⁄2-in. pegs might work better on a beefy trestle base.

Position pegs so that neither the mortised nor the tenoned stock splits as the peg is driven home (see drawing, p. 39). You also may use multiple pegs to secure wide mortises and tenons, such as those on table apron-to-leg joints. In these cases, double pegs help strengthen the joint and lend the design a more balanced appearance.

Drill peg holes first

Whether you're installing round or square pegs, start by choosing a bit that closely matches the peg size. Just make sure the bit isn't much larger than the peg stock. If you're drilling into softer stock, you can make the hole about 1⁄32 in. smaller than the peg stock because the primary wood will offer a little give. But you may need to whittle the bottom two-thirds of the peg to get it to fit the hole. Shoot for a snug fit, but not so tight that the peg could split either the mortised or tenoned stock. Different woods react differently, so test the fit on scrap pieces.

Before gluing the mortise-and-tenon joint, transfer the mortise/tenon location around to the face of the stock

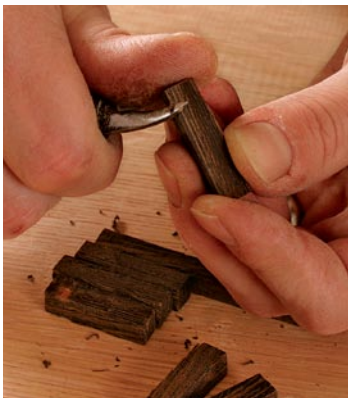

Whittle the bottom of the pegs and drive them home. *Round over the bottom two-thirds of the peg using a small knife or chisel (above). Use an adjustable wrench to help guide the peg and keep it aligned square when driving it in (right).*

FACETING PEGS

How pyramids are made. *With the chisel bevel side down and resting on a thin shim, lever the blade upward. For clean results, try to facet each side in one pass.*

Pegged breadboard ends never loosen

Pegging the breadboard ends of a tabletop is a great way to reinforce that joint. But you must allow for wood movement by elongating the outermost peg holes.

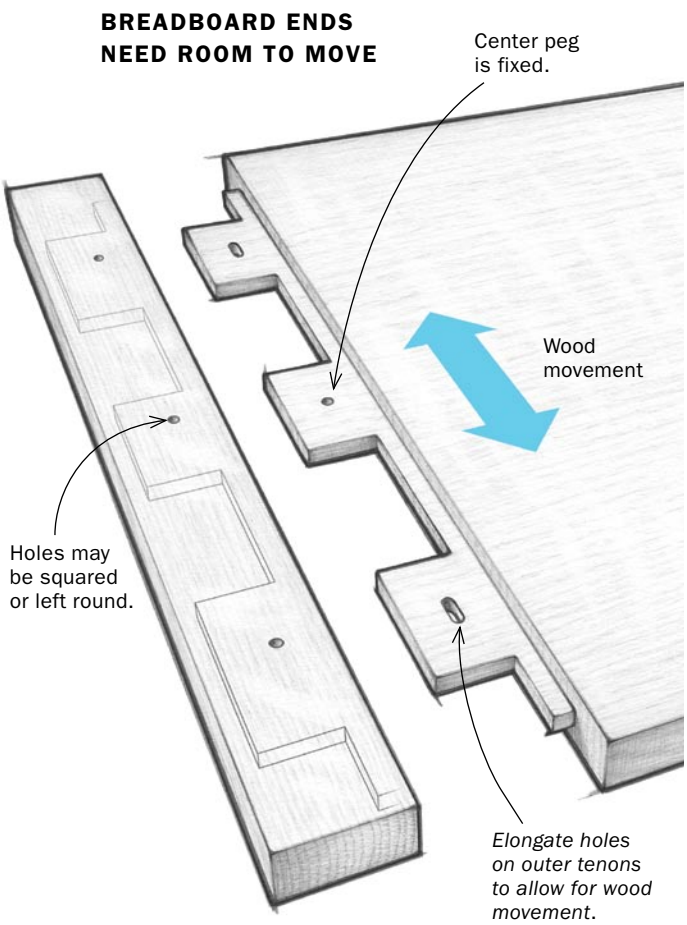

Clamp and drill, then widen the outermost tenon holes. *With the breadboard ends clamped to the tabletop, drill the holes for the pegs at their marked locations. Again, flag the bit to gauge the drilling depth (left). Remove the breadboard end, use the drill to elongate the holes in the outer tenon, then clean up the holes with a chisel (right).*

Drive the pegs. *Glue the breadboard ends to the tabletop, being sure the holes in the breadboards align with the holes in the tenons. Clamp them in place, and tap the pegs home.*

and then mark out the center point of the peg locations. If you are pegging an exposed mortise and tenon, such as a bridle joint, you can mark the locations after glue-up.

Simply drill at the center points all the way through the tenon and about ⅛ in. to ¼ in. beyond. On thinner stock, common on door frames, ¼ in. is not always possible. In these cases, simply drill about a third or half of the way into the opposite wall of the mortise—just make sure the back wall of the door stock isn't thinner than about ⅛ in. Use a piece of tape attached to the bit to control the depth, and keep the drill perpendicular to the workpiece. On smaller workpieces, using a drill press guarantees perpendicular holes. If your design calls for square pegs, you'll need to square up the top third of the hole using a chisel (see photos, facing page).

Metal hammer will sing as you tap in pegs

Both round and square pegs need a little prep work before you drive them home. After cutting the pegs to length—

they should be about ⅜ in. longer than the depth of the hole—ease the edges on the bottom of the pegs using sandpaper, a chisel, or a small knife. Doing so allows you to drive the peg into the hole without splitting or damaging any parts, and gives excess glue a place to go when you drive the pegs home.

Once both hole and peg are prepped, place a small drop of glue in the hole and apply a thin layer to the lower third of the peg. To drive the peg home, use a small metal finishing hammer. Its light weight won't stress the stock you're pounding, and the tone of the metal hammer will deepen as the peg bottoms out in the hole. Once the peg bottoms out, stop hammering or you'll risk cracking the stock.

Trim pegs flush or leave them proud

You can trim pegs flush (see p. 41), but leaving them proud of the surface they're driven into is a good way to accentuate the joinery even more. I often leave small pegs about 1⁄16 in. proud of the surface, larger ones a little more. After installation, the exposed end of the peg can be softened with sandpaper, chamfered with a chisel or plane, or, my favorite, faceted.

The first few times I tried to use faceted pegs, I made it a lot more difficult than necessary. Brian Boggs, a chairmaker in Kentucky, taught me a better way. Simply drive the peg into place as usual, then wait for the glue to dry. To cut the pegs to a consistent size, use a shim whose thickness matches the desired projection of the peg, and register the saw against it as you trim the pegs to length.

To cut the facets, use a chisel that's wider than the peg, and hold it bevel-side down against the surface adjacent to the peg. Working in from one side at a time, use the bevel as a lever to angle the blade upward as you cut toward the center. To prevent denting or scarring the surface you're bearing against, place a thin shim between the chisel's bevel and the surface of the wood. You'll have the best luck if you cut each facet in a single sweep of the chisel—every time you stop to realign the chisel, you're left with a small ridge on the peg's pyramid top that will have to be cleaned up. Before working on a project, practice the technique on a scrap peg and joint. □

Matthew Teague is a writer and a woodworker in Nashville, Tenn.

Drawbored pegs pull joints tight

OFFSET PEG HOLES ARE THE KEY TO A TIGHT FIT

By drilling the tenon peg holes slightly toward the shoulder, the mortised joint will be drawn tight as the peg is driven in.

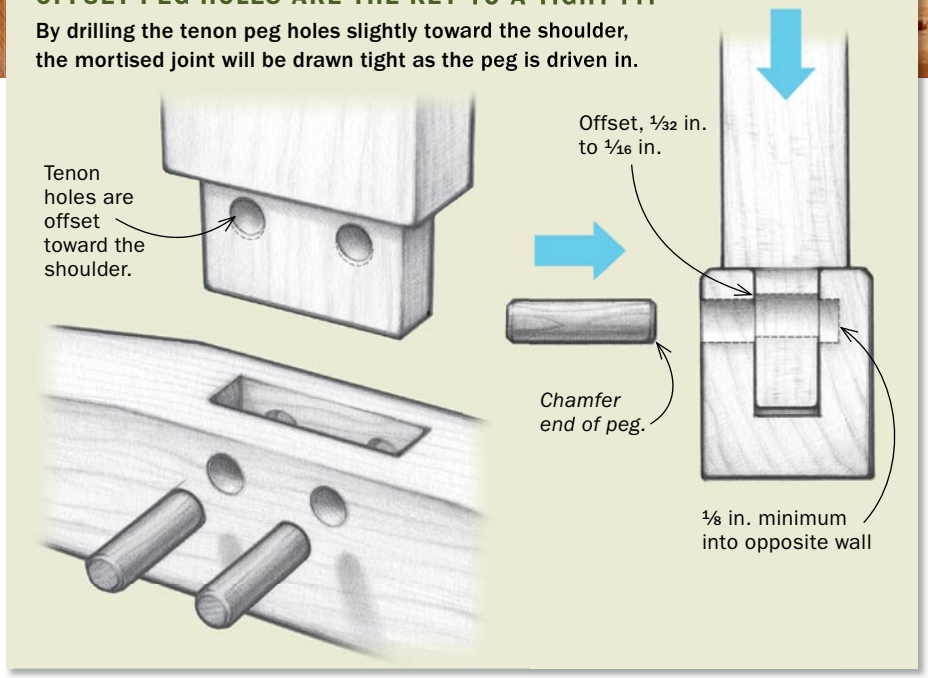

Drill the mortised piece. *Go through one side and partway into the other. Use a Forstner bit for a clean cut.*

Mark the tenon. *With the joint reassembled and clamped together, mark the center point of the hole. An easy way to do this is to insert a Forstner bit into the hole and tap lightly.*

No matter what kind of peg you use or how you adorn the top, drawboring adds significant strength to the joint and helps to pull the pieces tight as the pegs are driven home. It even will allow you to forgo clamps and glue at assembly, which is especially handy when you don't have clamps long enough to handle large assemblies like the stretchers on a long dining table. Drawbored pegs are drilled in two steps. After dry-fitting the tenon into the mortise, take apart the joint and drill through the mortised stock. Clamp the joint together again, then mark the hole's center point on the tenon. Disassemble the joint and scribe a line slightly inset from the center point toward the shoulder of the tenon (middle photo, right). For softer hardwoods like cherry or walnut, offset the holes about 1/16 in.; for harder woods like oak or hard maple, make the offset about 1/32 in. Now drill through the tenons at the inset marks. Chamfer one side of the peg or round over the end dramatically so that the peg seats itself in the offset hole without butting against the tenon face (see drawing, facing page). As the peg is driven home, the mortised stock will pull snug against the tenon shoulders.

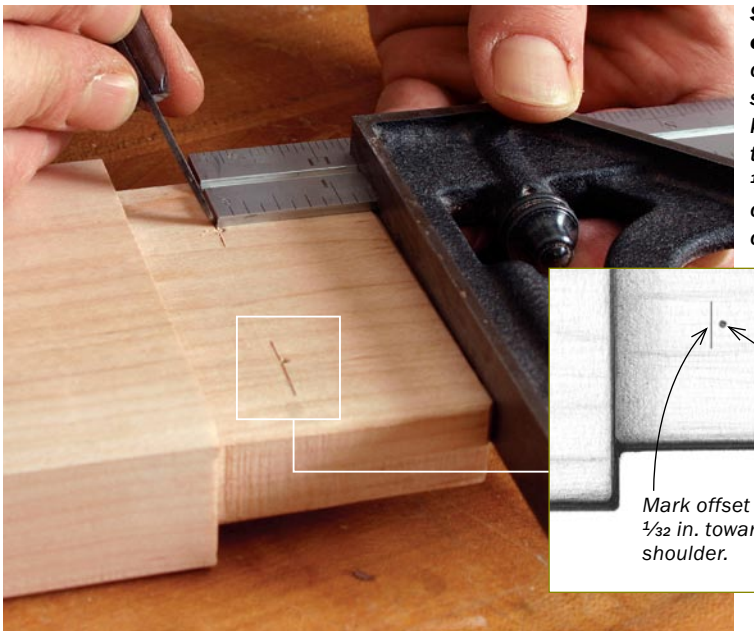

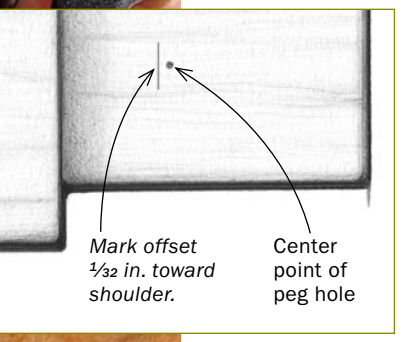

Scribe the offset. *Use a combination square and a knife to offset the hole 1/32 in. to 1/16 in., depending on the hardness of the materials.*

Drill through the tenon. *Align the tip of the Forstner bit so that it engages the offset line. If you need to drill multiple holes, using a fence helps ensure consistency.*

FineWoodworking.com

Watch Matthew Teague assemble a drawbored mortise and tenon.