Post-and-Rung Stool

Nontraditional approach simplifies round-tenon joinery without sacrificing strength

BY BRIAN BOGGS

I suspect that for many readers the idea of building a simple stool seems rather mundane. But when taken as an exercise in perfecting your round joinery, there is more challenge here than meets the eye. Even after building 1,500 chairs, making a perfect round joint keeps me on my toes.

And there are lots of other reasons to get into stool making. Apart from providing compact, inexpensive seating, stools can serve as steady footrests and portable desks. Also, they can be adapted to serve as benches or bar stools or even as end tables or coffee tables. Finally, if you've never made a chair, a stool is a great first step. All of the joints in this stool are at 90°.

While there are lots of ways to construct a stool, I prefer the post-and-rung frame. It's very lightweight, which is important because the stool will be moved around. Also, the round rungs can withstand a lot of racking and twisting without damaging the joint. And the parts, including the tenons, can be turned fairly quickly, and the mortises are simply drilled.

Round joints built to last

Round joints are often seen as a cheap, inferior way to join wood parts. After all, this is the joint in ladderback chairs that has kept many repair shops busy and many chair owners frustrated. But there are very old chairs with round joints that have held up for generations of use. My mother-in-law has a fine example of a post-and-rung chair that's more than 200 years old. The joints are in great shape, and there is no evidence of repairs. So, how can we make our chairs do that? There are at least two ways, and I have used them both.

The traditional method—The old locking joint is the most interesting. There are

Photos, except where noted: Jonathan Binzen

WET-DRY JOINERY REDUX

The author's post-and-rung joint does not rely on green wood. The rungs are dried to 4% moisture content in a simple kiln before assembly. But the legs are at 10% to 12% moisture content, a normal shop level. The leg-to-seat-frame joint relies on the same principle.

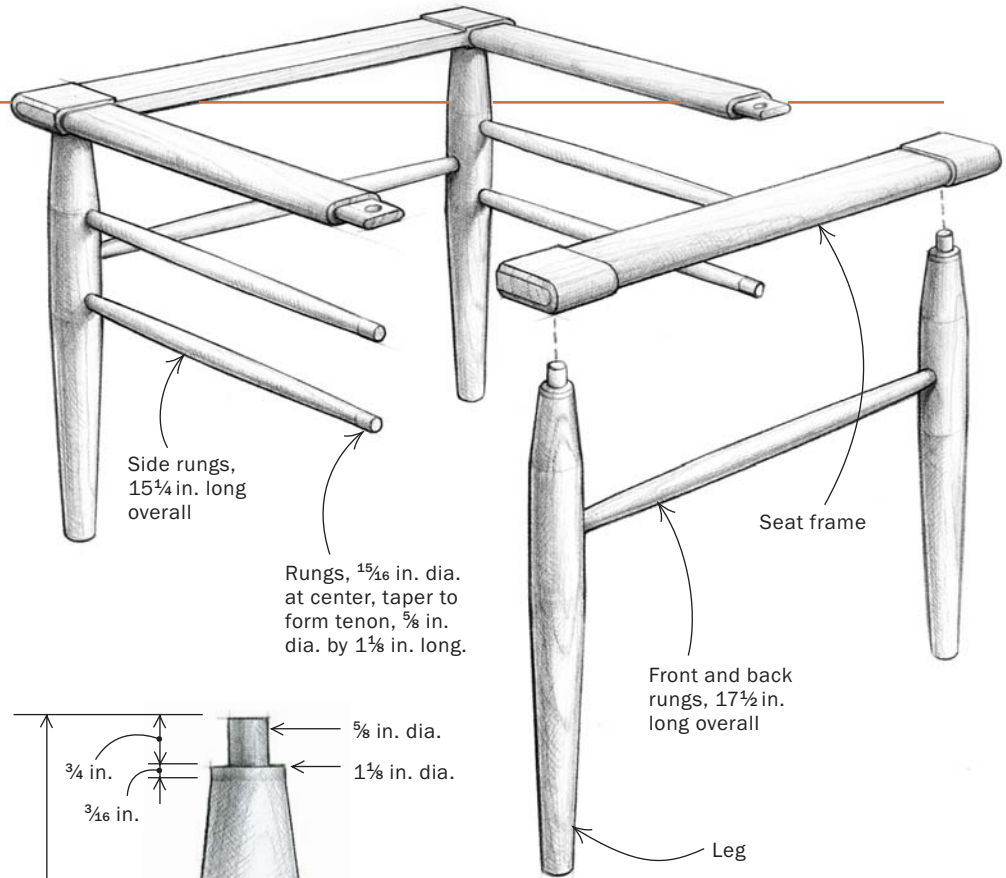

three requirements for success. First, the rung should be made of a very tough wood, such as oak or hickory, and the leg should be a slightly more elastic wood, such as maple. Second, the tenon is left slightly oversized, and a small notch is cut into it. Finally, the leg needs to have a high moisture content at the time of assembly—between 15% and 20%—with the rung dried to 4% or less. As the leg dries and shrinks, the mortise deforms to the shape of the notched tenon, locking the joint. Glue is not necessary and may even weaken the joint by filling the locking notch.

My hybrid version—The traditional locking joint works fine in this stool. However, I now prefer a hybrid version of this joint—one that doesn't require the locking notch or extra moisture in the legs. It also allows me to build chairs out of a single species of wood, even a softer species such as cherry or walnut.

The joint works by combining the super-dry rung with a near-perfect fit between the mortise and tenon. Glue is added for strength. I use the same method for the leg tenons that fit into the seat frame.

The wood for the legs is at about 10% moisture content after sitting around my shop. I wouldn't want anything wetter than 15%. Then I super-dry the rungs and just the tenon portion of the legs in a simple light-bulb kiln (see the photo at right).

Once dry, I cut the tenons to within a few thousandths of the mortise diameter. Because drills vary, you should drill the hole first and then carefully measure it. I use a dial caliper for measurements like this (I think every woodworker should own a pair). Torn fibers in the hole can weaken the joint, so use a very sharp bit, ideally a good brad-point (for more on drill bits and

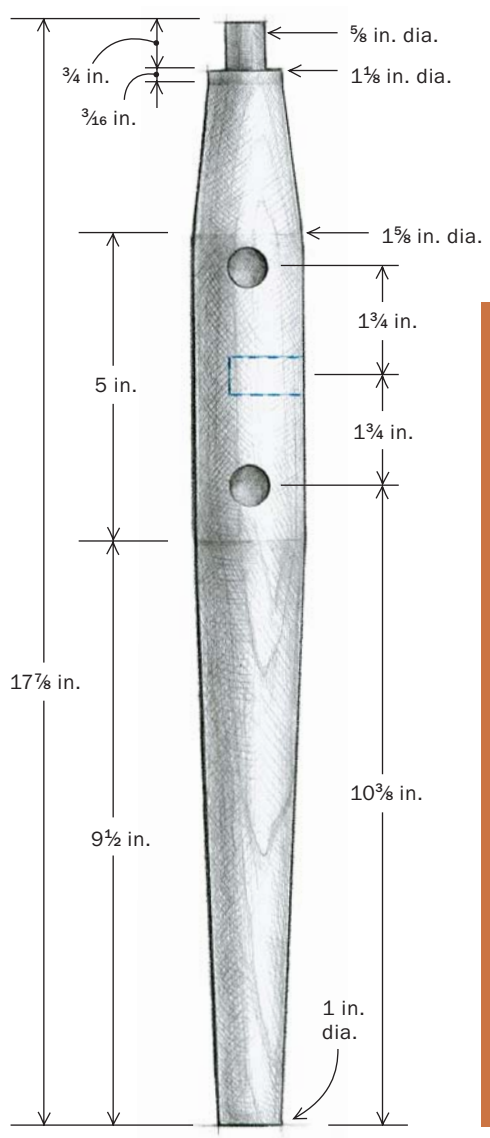

DRYING THE TENONS

Super-dry tenons are critical to the author's locking joint. The rung stock is placed inside a shopmade kiln, and the legs are inserted in holes at the top, to expose just their tenoned ends to the dry heat. The kiln is simply a plywood box lined with insulation board. A light bulb provides the heat.

Drawings: Bob La Pointe

BUILDING THE SEAT FRAME

The author uses round-cornered mortises and tenons to join the seat frame, but square tenons also would work.

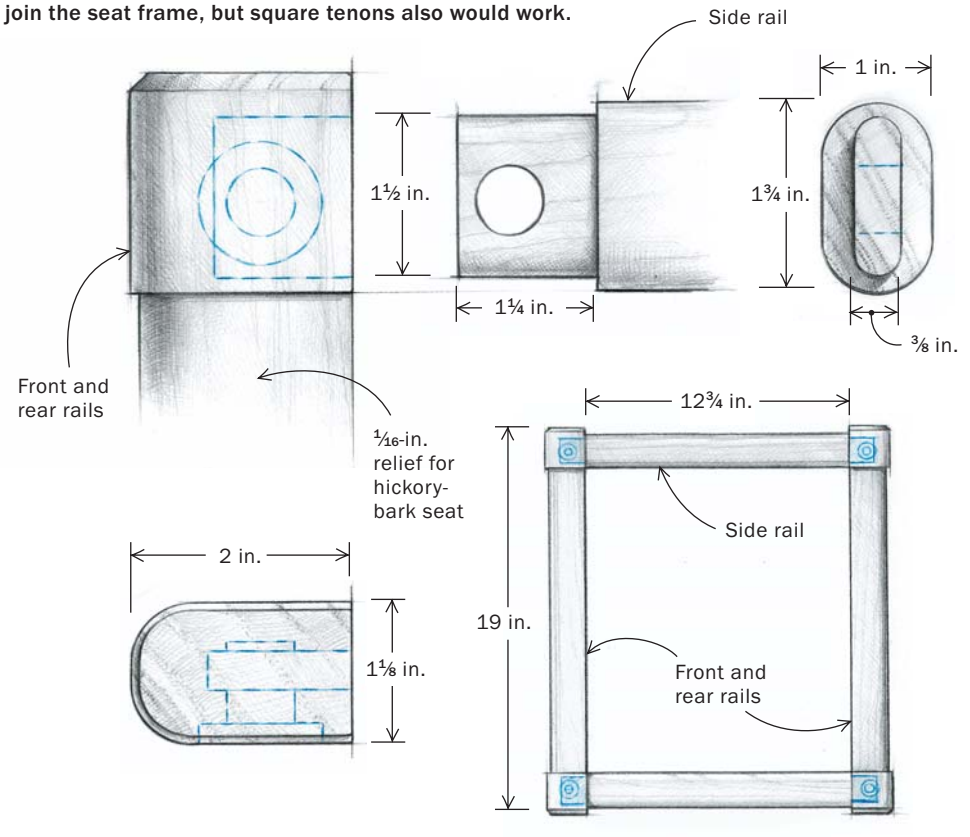

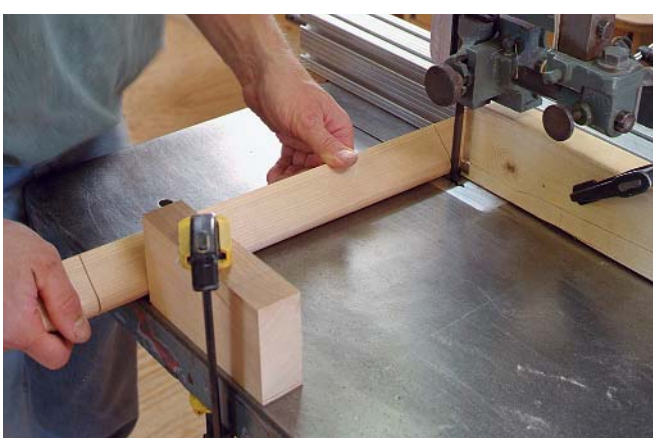

Make the seat frame while you wait for the other parts to dry. *After routing the ½-in. roundover on the edges of the front and rear rails, create the relieved section for the hickory-bark seat. Cut the shoulders of this section first by setting stop blocks 1/16 in. behind the front edge of the bandsaw blade. Rotate the rail against the blade direction.*

Then bandsaw away the three sides of the relieved area. *Set the rip fence 1/16 in. away from the outside edge of the blade, and start the cut just past the shoulder. Reverse the workpiece to finish each cut. Use a 7/16-in.-radius router bit to round over the edges of the relieved section.*

their recommended uses, see *FWW* #138, pp. 64-69).

After assembly, the tenons swell and tighten the joints as they approach equilibrium moisture content. However, without a good glue bond, the chair would depend only on the wood's resistance to compression to prevent racking. Hickory and oak can take this, but I want the support of a good glue joint for cherry or walnut. Make several test joints and check them after a few days.

Start with the right materials

Any time you need strength without a lot of bulk in a wooden product, the quality of your material is paramount. Without clear, straight-grained material, you just can't make a very good post-and-rung stool. The ultimate material is riven from a straight log section. However, the parts of this stool are thick enough that—as long as the wood is straight-grained—sawing out the parts will do just fine.

I prefer making the rungs with green wood for cost reasons and because I can follow the grain better when resawing an entire log section. But you can use kiln-dried wood for all of the parts, especially if you don't have time to wait for green wood to season. You can resaw 8/4 kiln-dried stock to get the quartersawn seat-frame parts you need.

To speed the drying process and to prevent checking, bandsaw the rung stock into 1⅛-in. octagons and turn the straight and tapered sections and stepped tenons on the legs to about ⅛ in. oversized before placing them in the kiln. I made my simple kiln with plywood and insulation board, but I have had success with an even simpler cardboard kiln with sticks driven through it to support the stock. Just keep the heat source away from direct contact with the wood or cardboard. A 150-watt bulb brings the temperature inside the kiln to 160°F to 180°F, and two or three days should be enough to get the rungs and leg tenons down to a moisture content of 4%.

I generally make one or two extra rungs per chair to cover drying and turning mishaps—not that I've ever had any.

Make the seat frame

While you're waiting for the rungs and leg tenons to dry, you can get the seat frame out of the way. The frame is constructed with round-cornered mortise-and-tenon

TURNING PRECISE TENONS

Square tool, square plunge. *To create the uniform tenons so critical to the post-and-rung joinery, the edge of the ⅜-in. beading/parting tool must be ground to 90°, and the tool must be fed in squarely.*

Each adjacent plunge cut is made until a ⅝-in. wrench (acting as a caliper) just slips over the spinning tenon. *To finish the rung, use a gouge and skew chisel to blend each tapered section from its 15⁄16-in. peak down to its tenon.*

joints, all at 90°. Use dry, quartersawn material to minimize movement. The only hard part on this frame is making the relieved sections on the front and rear rails. This 1⁄16-in. relief keeps the exposed corners at the same height as the finished bark weave and helps keep the bark from shifting outward.

First, dress all of the parts and cut them to their final lengths. Round over the side rails with a 7⁄16-in.-radius router bit, then set them aside. Then, with a ½-in.-radius bit, round over the full length of the front and rear rails.

For the relieved section, use the bandsaw to cut the shoulders first. Set the rip fence at 2 in. and clamp a stop block 1⁄16 in. behind the teeth. With the round end down against the table, cut the first shoulder. Then carefully roll the rail backward and up, exposing the round edge to the teeth. Keeping the teeth engaged in the cut, continue to rotate the workpiece until the shoulder is complete. Rotate the workpiece against the cutting direction of the blade. Going the other way will get your fingers slammed against the table. Don't ask me how I know this.

To saw out the relieved area on the bandsaw, set the rip fence 1⁄16 in. away from the outside of the teeth to control the depth of cut. You will probably need a fence extension, because both ends of the piece should ride on the fence once the cut is under way. Start just past the shoulder, letting the blade slowly work its way to full cutting depth. Cut to the opposite shoulder, then flip the part and cut the other way to finish the relief. After relieving three sides, round over the edges of the relieved area with a 7⁄16-in.-radius router bit, working as close to the end sections as you dare. Finish up with a rasp and a file.

Cut the mortise-and-tenon joints and glue up the frame, being careful to keep it square. This is a good time to apply finish to the seat frame. I use Minwax Antique Oil on my chairs and stools because it's easy to pad on with a rag, builds to a thin film and gives cherry a warm, natural glow.

Turn the rungs and legs

When the rungs and legs are out of the kiln, it's time to turn them. I do the rungs first. The thicker legs will not have warped as much, so they can be remounted between centers the same way they came off them. For the thinner rung stock, the usual method of centering the ends won't work. I center each one by eye, lightly cranking in the tailstock and adjusting the part until its center runs true. The ends get tapered only, so they can run out a bit. Before turning, I drive the centers home firmly.

It's always a good idea to create full-sized plans. I used full-scale drawings of this stool's parts to create story sticks and guides for drilling and turning. To lay out the tenons and tapers on the legs, for ex-

TURNING THE LEGS TO FINISHED SIZE

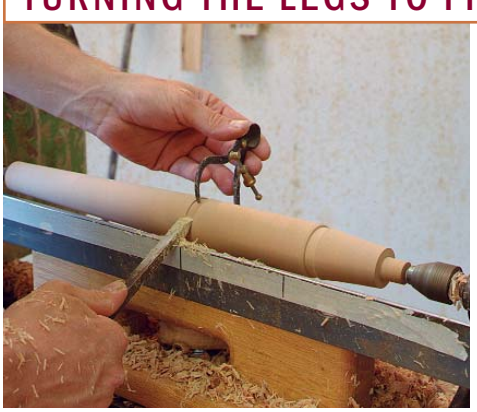

After removing their tenoned ends from the kiln, turn the rough legs to size. *Define the straight section by making plunge cuts to final depth at both ends. A strip of masking tape on the tool rest acts as a story stick.*

Then turn the tenons and connect all of the cuts. *Bring the stepped tenon down to size, and complete the straight and tapered sections using the previous cuts as a reference.*

DRILLING THE MORTISES

A sharp drill produces a clean hole and uniform chips. *Pay a little extra for a good brad-point bit, and adjust it in the chuck until it runs true.*

Drill the mortises for the front and back rungs first. *The author's drilling jig is a block with two V-grooves and a simple hold-down.*

Assemble the front and rear frames, and drill for the side rungs. *Lay the frames flat on a wide drill-press table.*

ample, I transferred lines directly from the plans to a strip of masking tape along my lathe's tool rest.

The trick to good tenons—First, for each rung, rough out a cylinder with a gouge. Then, with a ⅜-in. beading tool, carefully cut the tenons, using a wrench as a caliper. The wrench allows you to check the work while it is spinning. From the back of the workpiece, hold the wrench firmly against the tenon as you make the cut. When it slips over the tenon, stop cutting.

It is very important that the ⅝-in. wrench you use exactly match the size of the hole your drill bit actually cuts. When a tenon fits just right, I can barely push it all the way into the hole, and it pops like a cork when I pull it out. To adjust the fit you can hammer the wrench to close it up a bit or file it to make a bigger tenon. Mark this wrench and keep it by the lathe. This is a caliper now, not a wrench, and you don't want to mar it just to loosen a bolt.

When the tenons are done, turn the tapers, moving from the widest diameter at the middle of the rung down to the ⅝-in. tenon. I use a skew chisel for the final pass. The holes in the legs will be ⅛ in. deeper than the tenons, allowing the tapered shoulder of the tenon to be driven slightly into the mortise, hiding the glueline and the slight shoulder.

Legs need a straight midsection and a stepped tenon—Next, finish turning the roughed-in legs. The tapers and tenons are different. The midsection needs to be very straight, because the barrel will be used as a reference for drilling.

When turning the tenons, use the same ⅝-in. wrench to gauge the top portion and a regular caliper for the larger shoulder. To set your caliper for the shoulder, you need to know the exact size of your counterbore. Drill some test holes first and measure the counterbored portion carefully. Set your caliper to this exact dimension.

The rungs and legs are most easily sanded and finished before they are removed from the lathe. Just be careful not to get finish on the tenons.

Drill the legs and assemble the undercarriage

Before drilling the holes in the legs, make up a story stick with all of the rung locations marked—the single front and back rungs and the double side rungs.

It doesn't matter which side of the legs you drill first, but I drill and assemble the front and rear frames first (each with a single rung). Place two legs in a drilling jig, which is simply a block with two V-grooves and a hold-down (see the photo above left). Orienting the grain at 45° keeps shrinking and swelling of the leg equal on all rungs, and it keeps the elliptical grain pattern on the outside corners of the legs. Clamp the legs in the jig and mark the elevation of the rung. You might want to mark the center as well, but I just center the hole as I drill, sighting down the leg.

The accuracy of your holes depends on a number of factors. Assuming you have a good bit and a decent drill press, tighten the bit in the chuck with just hand pressure. Turn on the machine and watch the center of the drill to see if it runs true. If you see any vibration, loosen the bit, rotate it slightly and try again. Start the plunge slowly for a clean entry into the legs. Fine chips indicate a smooth hole. Also, if you raise the bit to clear the chips, don't bring it

Drill the stepped mortises in the seat frame. *Center the undercarriage on the seat frame and mark the mortise locations (left). The author uses a commercial counterbore bit (above) to machine the two-stage mortise accurately, in one shot.*

all the way out of the hole or it may tear the edge of the hole upon reentry.

Once you have drilled the front and back frames, assemble these parts. I use liquid hide glue for these frames because it gives me more time to get the whole thing assembled. I prefer Old Brown Glue from Antique Refinishers (619-298-0864). Coat both the mortise and tenon thoroughly. To align these parts, use the legs as winding sticks by sighting across one leg to the other. I use a deadblow hammer to drive the parts together. Drive every tenon as deeply as possible. You will hear the tone change when the tenon bottoms out.

To drill the mortises for the side rungs, mark the holes from the story stick and lay each two-leg frame flat on the drill-press table. If your table is too small, clamp a piece of plywood to it as an auxiliary table. After drilling, assemble the undercarriage by driving all of the rungs into one frame first. A bear hug will get the other side started, and the hammer finishes the job.

Attach the seat frame

With the undercarriage assembled, it's time to lay out and drill the stepped holes in the seat frame. Instead of laying out these according to measurements, I prefer to go by what the lower frame actually came out to be. Depending on how deep you drove the rungs, the distance between the tops of the legs can vary. With the seat frame upside-down on the table, center the leg tenons on the corner blocks of the seat frame and mark their locations.

To drill the stepped mortises I used to use a Forstner first, followed with a counterbore I made by gluing a plug over a spade bit. Now I prefer to use a commercial combination counterbore bit, which makes the job as easy as drilling a single hole.

If the counterbored hole is drilled to the right depth, attaching the undercarriage to the seat frame is pretty simple. Use plenty of glue and drive the leg tenons into the mortises evenly.

All that's left now is weaving the seat. I prefer to use hickory bark, but you could also use splint or Shaker tape. □

Brian Boggs is a chair maker in Berea, Ky., and teaches seminars on ladderback chair making.

Weaving a bark seat

If you've ever woven a chair seat in any material, you'll find weaving a bark seat a very manageable task. The hardest part could be finding the material (see Sources at left). If you are ambitious, follow the chapter on harvesting bark in John D. Alexander's book, *Make a Chair from a Tree* (Astragal Press, 1994).

I cut the bark that I harvest into ⅞-in.-wide, 1⁄16-in.-thick strips and soak them in hot water for about 45 minutes to make them pliable. Thicker material will need more time. Try to weave the seat in one day; otherwise, you'll have to wet the seat and wrap it in plastic to stop it from drying overnight.

Bark tends to cup toward the inside of the tree, and you want these cupped edges down for comfort. The innermost bark has a darker, smoother surface. The weaving pattern and technique is similar to the reed seat featured in *FWW* #147, pp. 61-67. But this is a two-over/two-under twill pattern instead of a three-over/three-under pattern. Also, no brads or nails are necessary. Tie the first strip on the back rail to start. Once you finish the seat, just tuck the last splint in on the bottom. As the bark dries, it becomes fixed in place.

Rub in a light coat of thinned linseed oil (equal parts oil and solvent) to bring out the color, then burnish with burlap. Wait a few days to sit on it. By then the weave should be dry enough that it won't sag. (For a more extensive guide to weaving a bark seat, visit www.finewoodworking.com.)

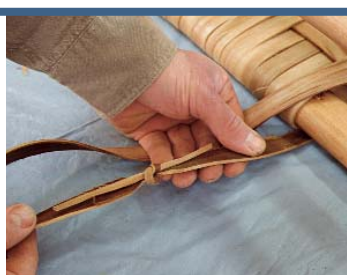

As each strip ends, knot it onto the next one. *This won't be possible without first whittling down the ends. All knots should end up underneath the seat.*

BARK SOURCES

The Unfinished Universe, 525 W. Short St., Lexington, KY 40507; (859) 252-3289

The Caning Shop, 926 Gilman St., Berkeley, CA 94710; (510) 527-5010 or (800) 544-3373

Brian Boggs, chair maker, 118 Lester St., Berea, KY 40403 (bark occasionally available May to July); (859) 986-4638, ask for Pat

Photo, this page (stool): Erika Marks