Photos: Matt Kenney

Outfeed Table Doubles as a Workbench

With a big top and vise, this easy-to-build table gives you more space to work

BY KELLY J. DUNTON

I have a small shop on the second story of a barn. When I needed a new outfeed table for my tablesaw, I saw it as a chance to squeeze one more work surface into the small space. So I designed the outfeed table to double as a workbench. Made entirely of soft maple, the table has a hefty top with a large cast-iron vise. Mortise-and-tenon joinery, along with a few bridle joints, makes for a rigid base. Construction is not difficult. I'll show you how to build this table from the bottom to the top.

Make the base

Regardless of the technique you use (mortiser, router, or drill press and chisel), deep through-mortises like those in the trestle feet and posts of this table can be difficult to make. I get around all that work by cutting the mortises on the tablesaw.

Here's the wizardry behind my method. The feet and posts are made by gluing two pieces together, so I cut the joinery before assembling these parts. Start with the stretcher mortises in the posts. Mill the two halves of the post to their final dimensions. You only have to lay out the mortise location on one half of the post. Stop blocks on a miter gauge guide the work from there.

Put a dado set in your tablesaw—a ¾-in.-wide stack works well. Now attach a long auxiliary fence to your miter gauge. You'll need two stop blocks to control the mortise's width and location. To set the stop blocks, place the workpiece against this auxiliary fence and slide it to the right so that

VERSATILE AND STRONG

Designed to carry at least twice its weight, this tablesaw outfeed bench has a base that can stand up to high-stress jobs like handplaning. And the joints are easy to make.

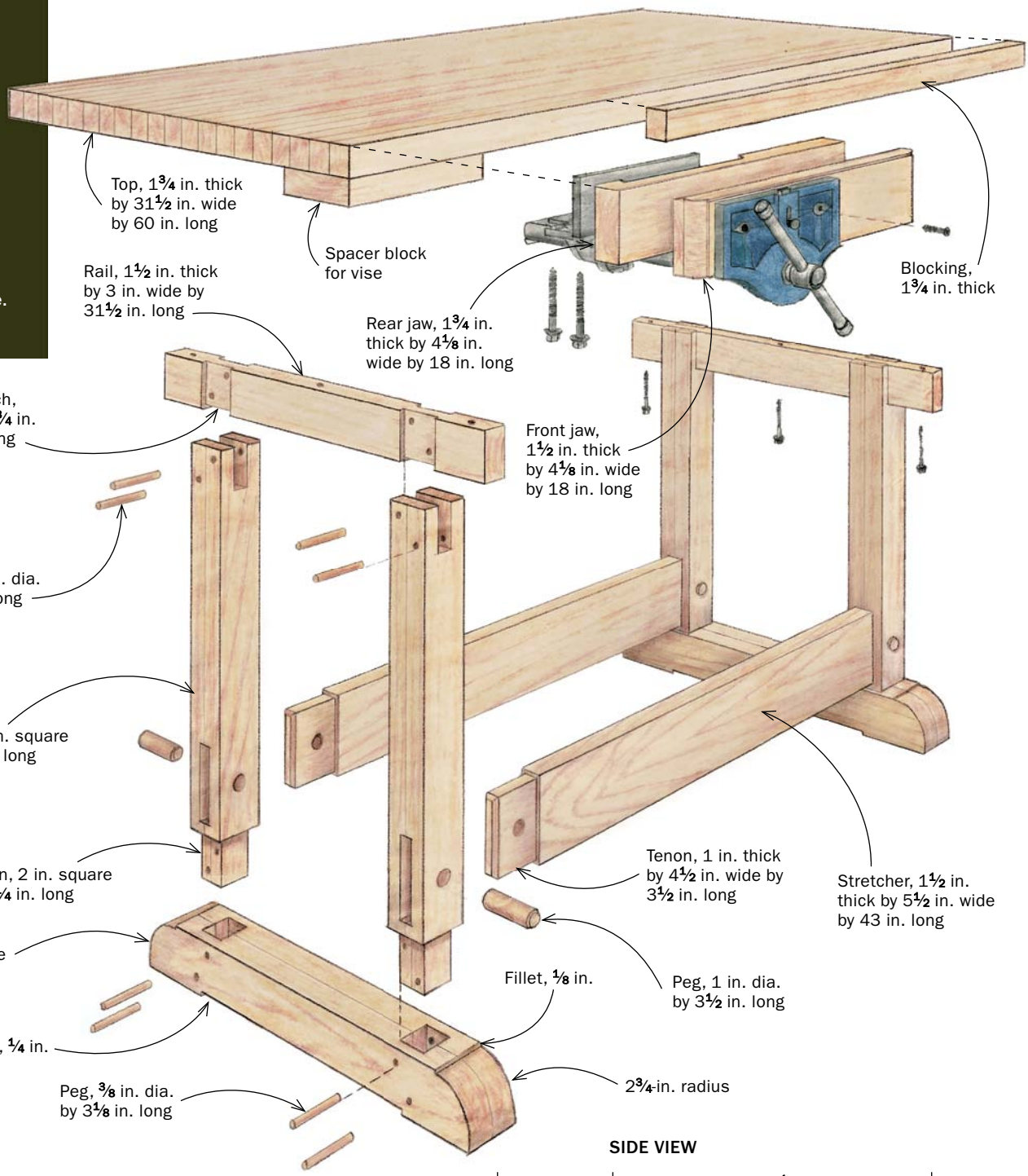

FRONT VIEW

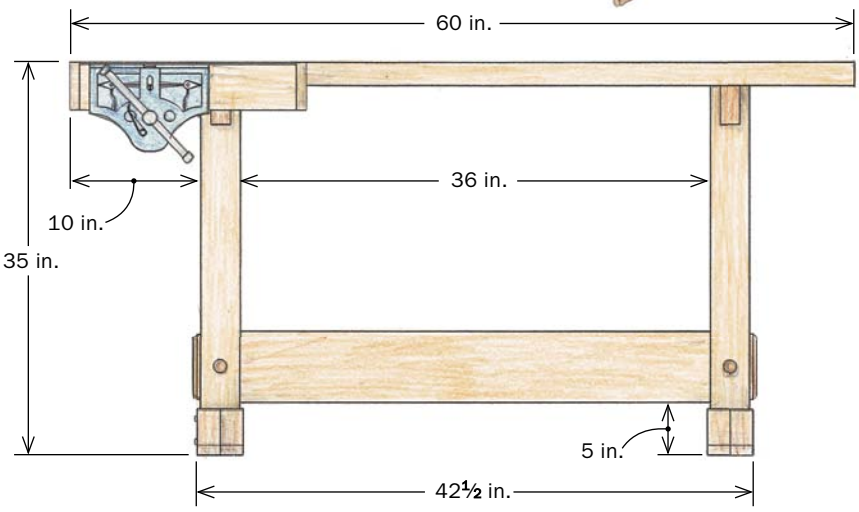

SIDE VIEW

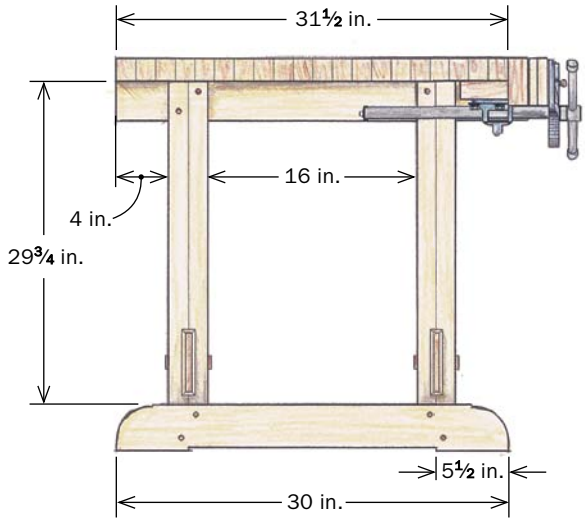

BIG TOP, LESS WORK

Glue up the top in sections small enough to joint and plane, then glue those sections together to complete the top.

Square up, then glue up. *After jointing a face, run the sections through the planer (above), then joint the edges square to the faces. A caul across the width and clamps over the gluelines at the ends keep the three sections aligned (left).*

the left end of the mortise is aligned with the left side of the dado set. Clamp the block to the fence, snug against the right end of the post half. Slide the post back to the left until the right end of the mortise aligns with the right side of the dado set. Clamp the other stop block to the fence, tight against the left end of the post.

Cut one end of the mortise. Slide the post half against the other stop and cut the other end. Cut away the waste between these two cuts with the dado set. Repeat the process for the remaining mortises.

To keep the post halves properly aligned during the glue-up, I put a filler block in the mortise. It should be the same thickness and width as the mortise, but make it several inches

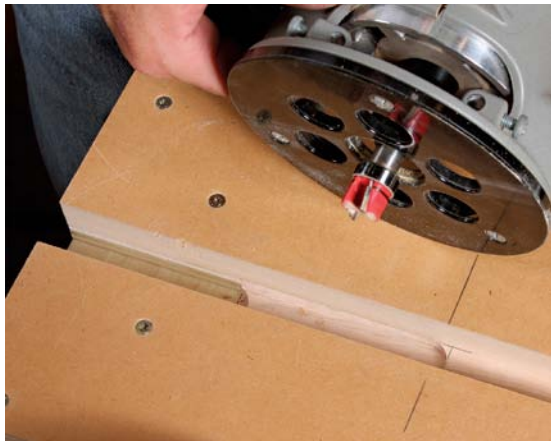

Rout clearance slots. *At 5 in. to 6 in. long (depending on the miter gauge you use) and just wider than the slots in your saw's table, these give miter bars a place to go so that workpieces can clear the back of the blade.*

Drawings: Kelly J. Dunton

CUT MORTISES AT THE TABLESAW

Gluing up the posts from two pieces of thinner stock allows you to cut the deep stretcher mortises at the tablesaw—a nifty trick.

Do the ends first. *Stop blocks on the miter gauge fence ensure that the mortise's length and location will be the same on every post half. Hog out the waste between the ends (right). The ¾-in.-wide dado set eats through the meat of the mortise in just a few passes.*

Clamp the halves together. *A filler block in the mortise keeps the halves properly aligned, while a set of cauls keeps them aligned side to side. After the clamps are set, knock out the filler block.*

Cut the tenons next. *A stop block determines the length.*

longer so that you can knock it out after clamping the halves together. Don't leave it in while the glue dries.

Next up is the bridle joint at the top of each post that houses the rail. Start at the bandsaw, cutting the cheeks and removing as much waste as you can with diagonal cuts down to the bottom corners. Clean up the remaining waste with a chisel.

Now make the feet. They also need mortises for the post tenons. Make them the same way as the stretcher mortises in the posts—on the tablesaw, before gluing the halves together. After gluing up the feet, cut their profile at the bandsaw.

Now you're ready to drill all of the peg holes at the drill press. Most Forstner bits are too short to make it all the way through the posts and feet, so use a brad-point bit instead. Also, slide the filler block that you used to align the mortises during the glue-up back into the mortise before you drill the hole. This prevents the bit from blowing out the grain inside the mortise.

With all of the mortises completed, begin the tenons. I cut all of the tenons at the tablesaw with a dado set and miter gauge, using a stop block to ensure consistent shoulders. I do the tenons at the bottom of the posts first.

Next up are the stretchers and rails. The stretchers have through-tenons that stick out ½ in. beyond the post. After

BRIDLE JOINTS FOR THE TRESTLE RAILS

The rails are long enough to support the top out to its edges.

Cut the cheeks first. *Set the fence to cut the cheek nearest to it. Flip the post over to make the second cheek cut to center the joint.*

Clean out the waste, too. *The bandsaw handles most of it, but you'll need to pare the baseline with a chisel.*

Notch the stretchers. *Use two stop blocks to control the notch's location and length. Leave the joint a bit thick, so you can plane it to fit the open mortise in the post.*

fitting the tenons, cut them to length and chamfer the ends with a block plane.

The end rails are notched on both faces to fit into the bridle joints. Cut the notches with a dado set. After fitting the joints, I chamfer the ends of the rails with a block plane.

No clamps needed for assembly

Now that all of the joinery is cut, you can assemble the base. Start with the trestle ends. Its joints are glued, but they are also drawbored—including the bridle joints—to ensure that the tenon shoulder is pulled tight. To set up the joint for drawboring, dry-fit the tenon in the mortise. Now grab the bit you used to drill the peg holes. Slip it into the hole and give it a light tap, just enough to mark the tenon. Pull apart the joint and use the punch to offset the mark about 1/32 in. closer to the shoulder. Drill a hole through the tenon at this new mark.

Spread glue on the joint, insert the tenon, and drive the peg into the hole. As it passes through the hole, the peg forces the tenon

DRAWBORE THE JOINTS

The big advantage of the drawbored joint is that the peg pulls the tenon shoulders tight to the posts, helping to create a rigid and strong assembly without the need for clamps.

DRAWBORE PEG CREATES A SEAMLESS JOINT

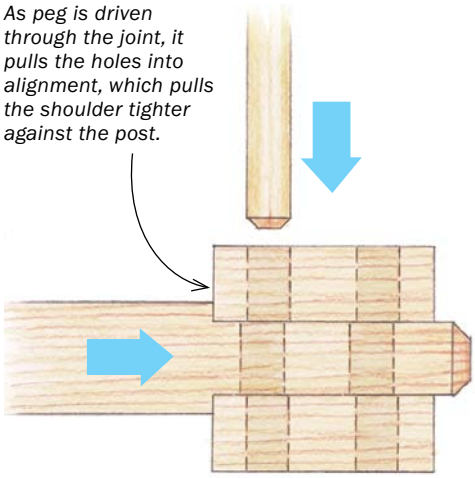

Transfer the hole. *Use the same bit you used to drill the peg holes. Just give it a tap.*

Offset the mark. *Use a punch to move it slightly (1/32 in.) closer to the shoulder.*

Now drill. *Any movement during drilling can prevent the drawbore from working properly, so clamp the post to the drill-press table.*

ASSEMBLE THE BASE

Drawbored joinery means no clamps are needed. Once the base is together, make and attach the top.

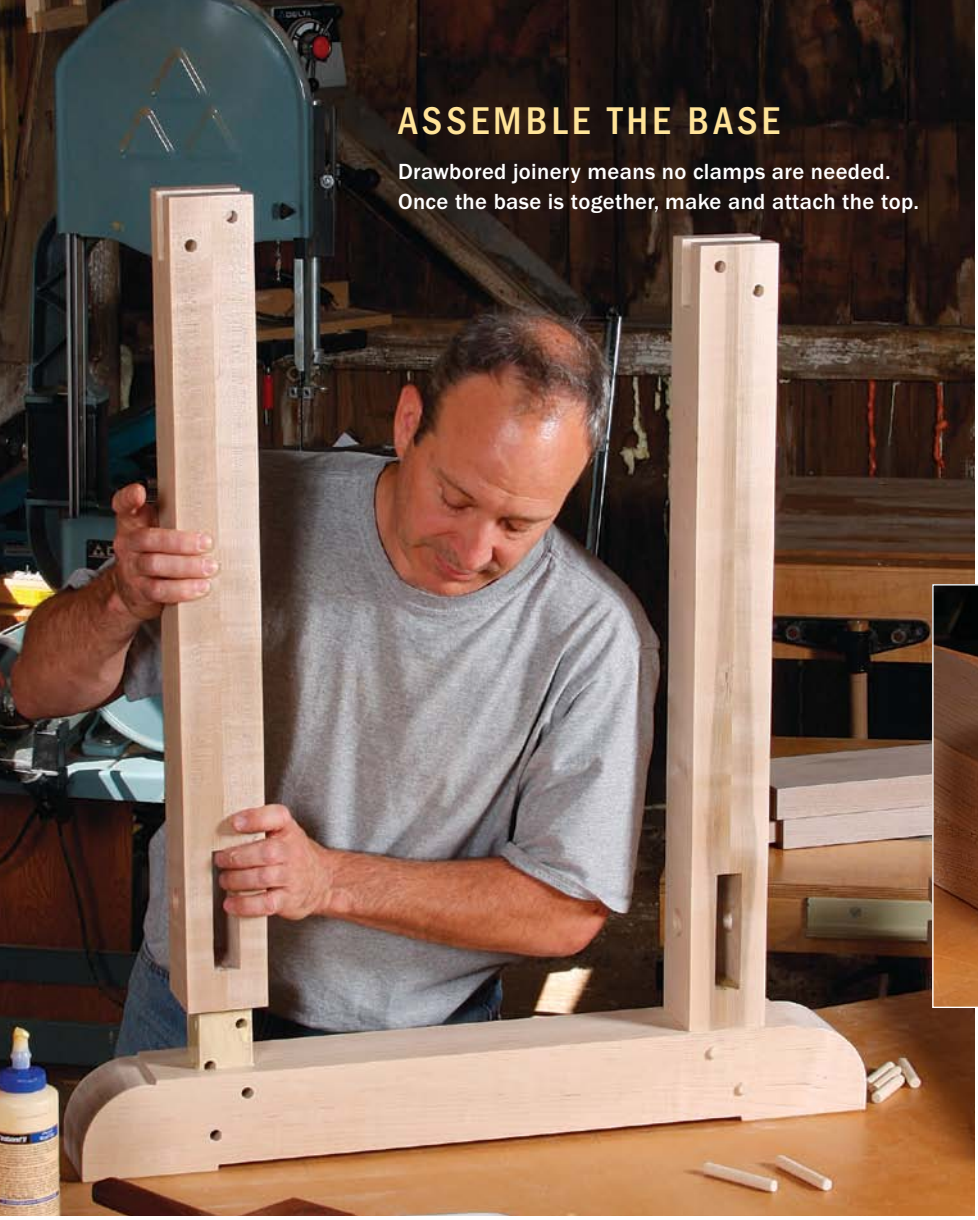

Posts and feet first. *After spreading glue on the joint, slide the post into the mortise. Because the peg hole in the tenon is offset toward the shoulder, the tenon is pulled into the mortise and against the shoulder when you knock in the pegs.*

deeper into the mortise and pulls the shoulder tight against the post. No need for clamps.

After the end assemblies are together, connect them with the two long stretchers. These don't get glue, so just put them together and knock in the drawbore pegs. Just like that, the base is done. Now on to the top.

Make the top and install the vise

The top is laminated from strips of maple. This means you'll need plenty of glue and a bunch of clamps. To avoid a lot of flattening after the glue-up, I use a proven technique that ensures a dead-flat top. Glue up several sections of the top

first. Each section needs to be narrow enough to fit across your jointer and through your planer after the glue has dried. Because I have a 12-in. jointer and planer, that means three sections. If your machines are smaller, you'll need to break the top into more sections.

After the sections have been rejointed (including edge jointing) and planed, glue them all together at once. Take care to ensure that they're aligned

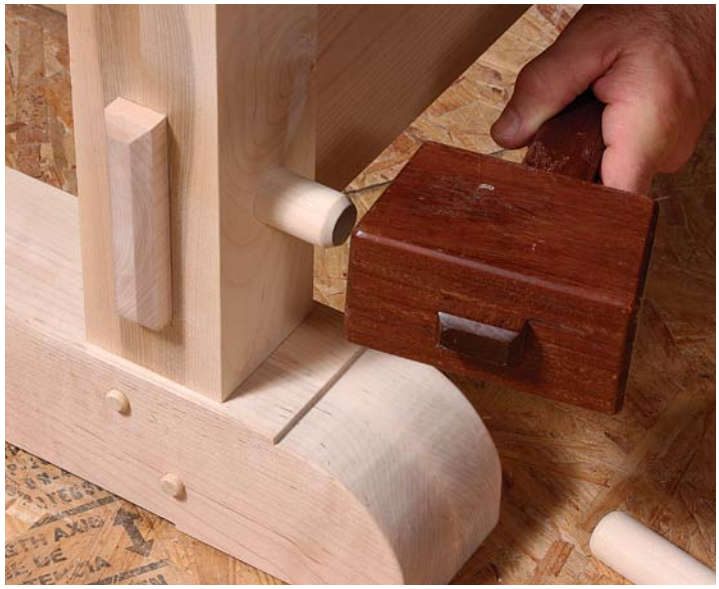

No glue for the long stretchers. *Slide the tenons in dry (above), then knock in the big drawbore pegs (right). This joint won't work loose, but you'll still be able to take it apart should you need to move the bench.*

ADD THE VISE

Cast-iron vises are strong and easy to install, but their metal jaws can mar and damage workpieces, so cover them with thick, shopmade wooden jaws.

SPACER BLOCK POSITIONS JAWS

Size the block so that the vise jaws sit just below the benchtop after installation. This way, you don't have to worry about accidentally hitting them with a plane or saw.

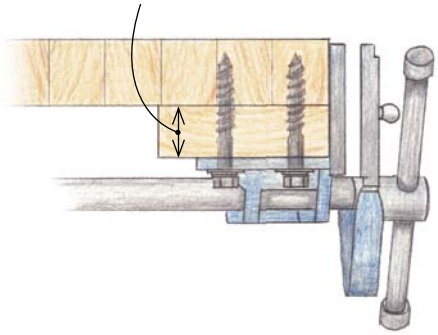

Bolt on the vise. *A spacer block lowers it so that the top edge of the back jaw sits just below the surface of the bench.*

Add the rear jaw. *Notch it to fit over the metal jaw. Screw through it and the holes in the metal jaw to anchor the screws in the benchtop.*

Block out the top. *This brings the front edge in line with the wooden rear jaw, which makes it easier to clamp wide and long boards in the vise.*

The front jaw is last. *After screwing it in place, plane the top edge of the wooden jaws flush to the benchtop.*

end to end and top to bottom. Doing this carefully should eliminate any need for flattening afterward.

To install the vise, you'll need to attach a spacer block between the bench and the vise to position the top edge of the vise's rear jaw flush with the top surface. This makes the vise much more useful for cutting joinery and planing boards on edge. Now mill up a piece of maple that's as thick as the rear jaw, as wide as the top is thick, and long enough to run from the vise to the opposite end of the bench. Glue it to the benchtop. This brings the benchtop in line with the vise's rear jaw and makes clamping boards in the vise much easier.

Put the top on the base. Attach it with six lag screws, three at each end. Put the table in place behind your tablesaw. Mark where the miter slots in the saw's table hit the benchtop, then widen it just a bit. Slide the table away from the saw, and rout slots in the benchtop to create clearance for miter bars. I do this with a flush-trimming bit and a template that has a notch slightly wider than the miter-gauge slot in the tablesaw.

Now the table is done. Apply some oil to the base and top, slide it place, and get to work. □

Kelly J. Dunton is restoring his 100-year-old barn as a place for chickens, ducks, and cars, but he's reserving the second story for his woodworking shop.