1 Use air-dried lumber.

2 Steam at 200° to 210°F.

7 Secrets of Steam-Bending

Bend furniture parts perfectly without fail

BY MICHAEL C. FORTUNE

There are three ways to make a curved part from solid wood. You can cut it out of a larger block, laminate thin plies over a form, or bend it over a form using the magic of deep heat. I prefer bending, using steam to make the wood pliable. Steam-bent parts are more attractive and stronger than those cut from a block of wood. And although bent laminations are stronger than steam-bent parts, they have gluelines, and non-continuous grain on the sides, which can detract from the part's beauty.

You may have heard that steam-bending wood is a difficult technique that produces as many broken and misshapen parts as good ones. But it's not hard, just misunderstood. I'll show you how to bend without breaking, creating strong curved parts from solid wood. I'll also give you some tips on making a steambox and bending forms, and drying the bent parts. My steam-bending techniques are wonderfully simple and yield perfect parts every time. I've used them

4 Don't rush. Parts remain pliable for 10 minutes.

5 Use a compression strap to eliminate torn fibers.

3 Steam parts one to two hours for each inch of thickness.

From subtle to extreme

Steam-bending is a powerful technique, so don't be timid. Sure, you can bend gentle curves like those on the back posts of this dining chair by Fortune. But don't stop there; get aggressive. With steam you can bend a piece of wood into just about any shape, like the U-shaped seat frame, which has two bends at 90°.

for 35 years, creating curved parts without a problem. There are specific conditions you must control—such as temperature and how long the steam is applied—and if you do that, you are home free.

Online Extra

To watch Fortune tackle some complex bends, go to **FineWoodworking.com/extras.**

Bend only air-dried lumber, and use straps

The first thing to know about steam-bending is that you should bend only air-dried wood. Drying wood in a kiln sets the wood's lignin, which is a binding substance, and permanently adheres the fibers and cells to one another. Since they can't move relative to one another, the fibers tear as you bend the wood. That's not the case with air-dried lumber, where flexible lignin is softened by steam, allowing the fibers and cells to bend without tearing. However, even with air-dried lumber, you need to make sure that the wood isn't too dry for bending. The moisture content needs to be between 12% and 16%. Check it with a moisture meter.

The ideal woods for steam-bending are domestic hardwoods. Ash, oak, hickory, elm, and walnut are best when you're learning, but with practice you'll be able to bend difficult woods like figured cherry and curly and bird's-eye maple. Domestic softwoods and tropical hardwoods are not

6 Wait at least an hour to remove the strap.

7 Dry the parts (clamped to drying rack) for at least one week.

Make a strong form designed for clamping

You don't need a perfectly smooth curve on the form to get a nice curve on the bent part. Make your forms by gluing together layers of particleboard and then cutting out the curve on the bandsaw. There's no need to clean up the cut.

SIMPLE BUT STEADFAST

Bending a piece of wood requires a lot of force, so the form needs to be tough. Make the form beefy and attach it to a base with cleats that prevent the form from shifting.

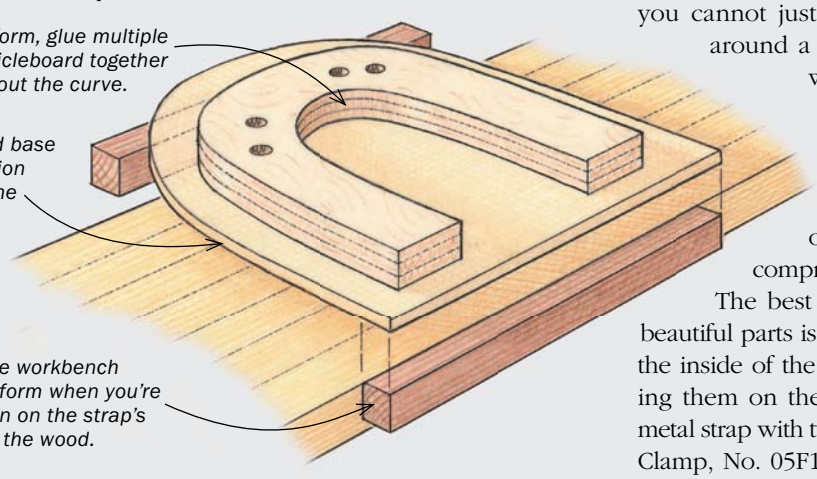

The form needs parallel sides. *This way, clamps can be used almost anywhere along it.*

Drill holes for better clamping around tight corners. *A clamp head should fit inside.*

good choices. Softwood fibers are too short, while those in tropical woods are interlocking. Both are prone to tearing. However, even with air-dried domestic hardwoods, you cannot just steam the part, bend it around a form, and clamp it. That will stretch the wood fibers on the outside surface of the curve. The amazing thing about wood is that it won't stretch much without breaking, but it will compress almost beyond belief.

The best way to create a stack of beautiful parts is to compress the fibers on the inside of the curve rather than stretching them on the outside. The secret is a metal strap with two end stops (Veritas Strap Clamp, No. 05F10.01; $80, leevalley.com). The strap goes on the outside of the part, which fits between the stops. When you bend the part, the strap prevents the outside fibers from stretching, forcing the fibers on the inside of the curve to compress. You'll be amazed at the bends you can make using a compression strap. Skip it, and many parts will end up broken, and those that don't will have inconsistent shapes.

How to bend wood with steam

For steam-bending wood, you need a box to hold the steam and a way to make that

Anchor the form to your bench. *Because of the forces involved, clamps won't do, so glue cleats to the bottom of the form. The cleats fit snugly against the bench's edges.*

L-shaped blocks trap the bench's feet. *Without them, the bench would move across the floor as soon as Fortune began to lever the part around the form.*

Keep the steambox simple

Use ¾-in. plywood sheathing for the sides and don't apply a finish. If you leave the door open and allow the box to dry when you're done steaming, the box will be around for years—Fortune has been using his since 1976.

Rods allow steam to reach every side. *After drilling holes for them, Fortune drives in ¼-in.-dia. aluminum dowels (available at home centers), which raise the wood off the box's floor so that parts are steamed evenly.*

EASY CONSTRUCTION

A box larger than this one would be too hard to heat. If you need to bend a longer part, just make a second box and link it to the first. You could also make a box from ABS pipe (use 4-in. or 6-in. dia.).

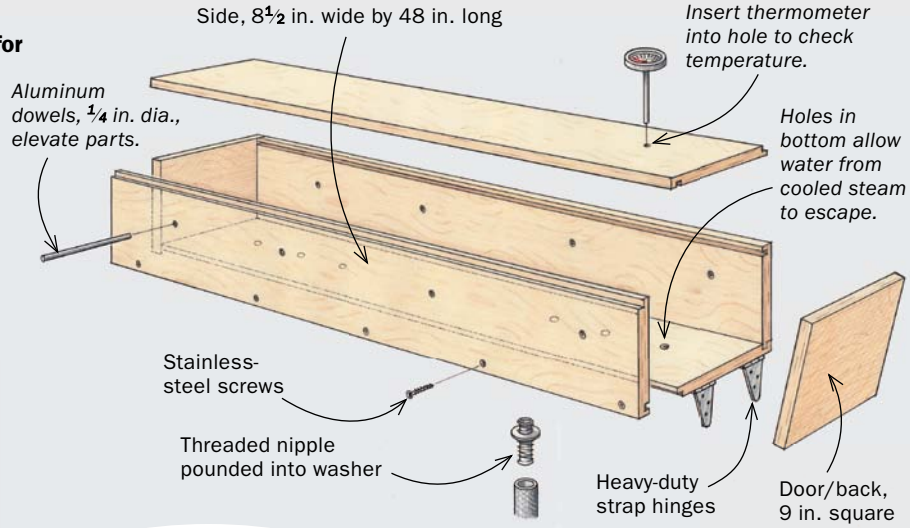

steam. I've been using the same box since 1976. You can make a similar one from inexpensive plywood (see drawing, above). As for the steam itself, buy a steamer designed for woodworkers.

The bending form must be durable. Make it by gluing together layers of particleboard and then cutting out the shape. The cut surface doesn't need to be glass-smooth, so don't worry about sanding it.

After the form is made, you're ready to steam the parts. Heat the box to between 200°F and 210°F. Then load the parts, writing the time entered on the end grain of each piece. Steam them one hour for each inch of thickness.

You must be careful not to steam a part for too long. A 1-in.-thick part can be steamed for one to two hours without trouble, but if you steam it for three hours the fibers become too flexible and will wrinkle rather than slip past one another when you compress them. These compression wrinkles show up on the inside face of the part. The threat of oversteaming also has a practical impact on how many parts you can steam at once. You don't want to

It's OK to do more than one part at a time. *Just make sure to leave space between them, so the steam can reach the parts' sides. Keep an eye on the temperature. The box's interior should be between 200°F and 210°F.*

Steam engine. *You don't need a fancy steamer—a teapot will do—but one designed for steam-bending, like this one from Rockler (No. 42826; $75, rockler.com), makes it easier to get a consistent temperature in the box.*

Photos: Matt Kenney; drawings: Vince Babak

Start with air-dried wood

Outdoor storage works well. *For the best air movement and ideal moisture content (12% to 16%), the wood should be at least 24 in. off the ground and under a roof.*

The fibers, cells, and vessels in wood are held together by lignin. In air-dried lumber, moist heat (steam) makes the lignin soft and pliable, so the wood bends without tearing. Other than outdoors (above), an unheated basement or garage is a good spot to store wood as it dries. Just keep the wood low to the ground, where the air is more humid.

Bend without breaking

Wood can stretch only so far before the fibers tear, which is exactly what can happen to the outside surface of a part when you try to bend it around a form. To eliminate those tears, use a strap on the outside of the part to prevent those fibers from stretching.

The part goes between the strap and form. *The strap forces the wood to compress on the inside rather than stretch on the outside, while the form allows you to control the part's shape as you bend it.*

Tighten the adjustable end block. *Stop when both the part and strap begin to bend. Fortune has already clamped the end block to the form.*

Lean into it and bend. *Add clamps as you go so that the part remains tight against the form.*

THE SECRET IS THE STRAP AND END BLOCKS

You can bend wood to almost any shape and radius, but only if you can stop it from being ripped apart along the outside edge. That's the job of a compression strap with two end blocks.

NO STRAP

When bent with nothing to constrain them, wood fibers stretch.

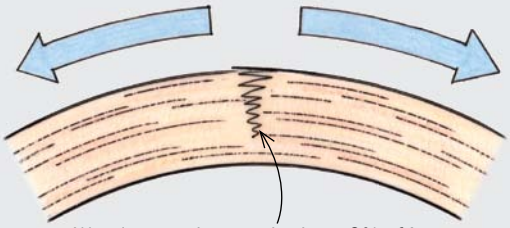

Wood can only stretch about 2% of its overall length before the fibers begin to tear.

WITH A STRAP AND END BLOCKS

When you bend with a compression strap equipped with end blocks, the wood can't stretch, so it must compress. No fibers are torn and you can bend to far smaller radii, because wood can compress to a far greater degree than it can stretch.

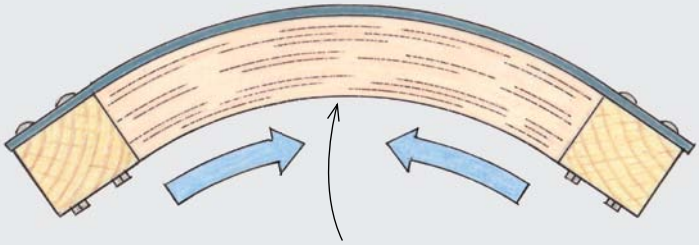

Fibers on the inside face become shorter through compression.

ANATOMY OF A COMPRESSION STRAP

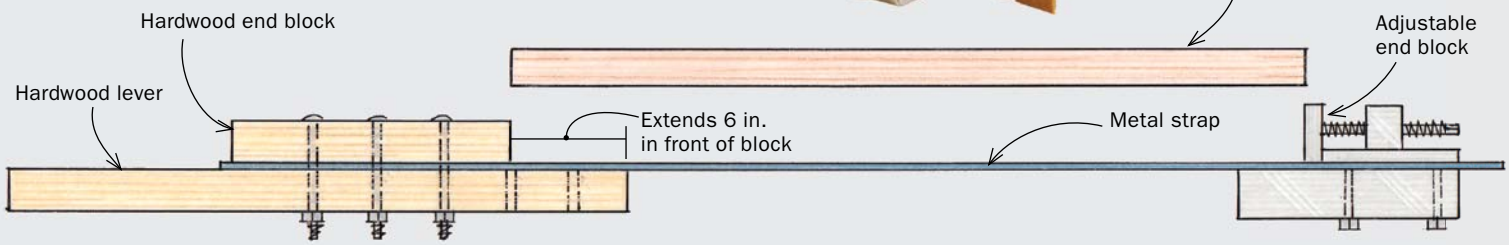

put so many parts in that you can't get the last one onto the bending form before it's been in for too long.

Wear gloves when you pull the part out of the steambox. It will be hot. To avoid scalds, keep your body away from the steam that rises when you open the door. After you've pulled the part out, don't rush. A 1-in.-thick part retains enough heat to remain pliable for 10 minutes. Thicker parts stay pliable for longer—a 2½-in.-thick part is good for about 20 minutes.

Place the steamed part between the end stops on the strap and snug up the adjustable stop just enough to create a slight arc in the strap and part. If the strap is any looser, the fibers on the outside surface can tear, but if it's any tighter, compression wrinkles can form on the inside surface. Use a few clamps to keep the part aligned with the strap. This is especially important for parts less than ¾ in. thick. Take them off one at a time as you bend the part.

Attach one end of the strap to the bending form. One person can bend parts up to 1½ in. thick without help. To bend thicker parts by yourself, you can use a block and tackle. If a kink forms as you are bending, clamp the strap and part to the form right behind the area where the kink formed,

Now you're ready to bend

With a sturdy form, a compression strap, and wood heated to the right temperature, even tight bends are not a problem.

Put the part into the strap. *Have everything else you need—the form, plenty of clamps—set up and ready to go. You don't need to rush, but there's no need to make things unnecessarily complicated.*

Clamp the part to the strap. *This keeps the part aligned with the strap. Take the clamps off one at a time as you bend the part around the form.*

using the clamp (and not the lever) to pull the part down to the form. After that you can continue bending the part with the lever.

If you have trouble bending the part or find that your clamps aren't big enough, no worries. Just put the part back in the steambox to bring it back up to the correct temperature and try again.

Dry parts to lock in the new shape

A part that has been steamed and bent around a form will not hold its new shape until it has dried completely and the lignin has set, down to a moisture content

Bend a little at a time. *Add clamps as you go. This keeps the part tight to the form, ensuring that it takes on the shape you intend.*

Pound it down. *Make sure the part is seated on the form's base. Otherwise, the part will be twisted and unusable.*

Clamp at the wrinkle. *This flattens the part against the form. Continue bending with the lever.*

Take the bent part off the form and put it on a drying rack. *It will still want to straighten out, but hand pressure is enough to prevent that as you move it to a drying rack (left). Drill holes to accommodate the clamps (right), and keep the part on the rack until its moisture content is down to 7% or 8% . That takes about one week.*

around 7% or 8%. It takes about a week for that to happen, but checking with a moisture meter is the most accurate way to determine when the part is truly dry.

You can use a household fan to blow air over the drying part and speed up the process. For most woods, you can get the fan going as soon as you're done clamping the part to the form. But don't use the fan right away for ring-porous woods like oak, because they are prone to checking if they dry too quickly. I cover oak and similar woods with a blanket for the first day to slow down the drying. On the second day, I remove the blanket and turn on the fan.

Whether you use the fan or not, make sure to remove the strap about one hour after bending the wood. If you leave the strap on any longer, the chemical reaction between the tannins in the wood and the steel will stain the wood. Any staining that occurs before an hour should be superficial and easily removed with a card scraper.

If you are bending just one part, you can clamp it back to the form after removing the strap and let it dry there, but if you are bending several identical parts, make a drying rack and move the parts to it, so you can use the bending form again. ☐

Contributing editor Michael C. Fortune has been steam-bending wood for 35 years.

More than one part? *Make a bigger rack. Fortune ties two end pieces together with 2x4 ribs, which double as clamping surfaces.*