Dressing Up a Basic Box

Traditional plinth and cornice plus a curved front transform a simple case piece

BY ROGER HOLMES

Most woodworkers that I know spend three quarters of their time making boxes of one sort or another. Boxes for books, clothing, linen and blankets, dishes, cutlery, keepsakes and odds and ends. We even spend a great deal of time making boxes for boxes, i.e., drawers for a chest or other case piece.

Designing with boxes is deceptively simple. First you figure out the right size and configuration of box or boxes to store or display the desired items. Then you try to make the boxes attractive. A recent request to build a pair of bedside cabinets for friends allowed me to explore methods of enhancing the basic box.

Wedged between the bed and a wall in many bedrooms, most bedside cabinets don't benefit from exposed joinery or lovely wood—you don't get much of a view of either. Trying to think outside the box, I started sketching various curvy alternatives, deciding on the simplest of them all—curving the front plane of the cabinet along a gentle arc. For centuries simple curves have been used to break the four-square rigidity of a box without sacrificing the advantages of rectilinear construction.

A good start, but it wasn't enough. I wanted to add some visual weight to the top and bottom, something a little more substantial than the ⅞-in.-thick edges of the box. The solutions—a 5-in.-tall

DETAILS MAKE THE DIFFERENCE

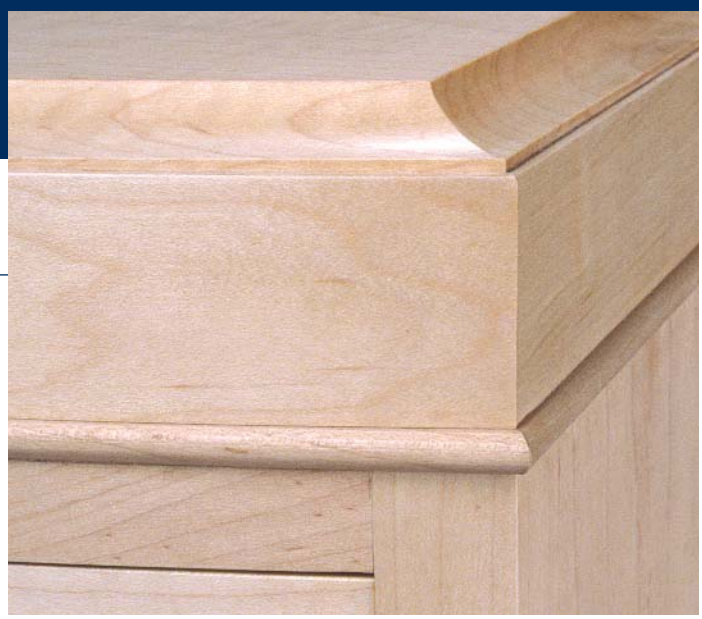

Mitered corners of this cornice are not 45°. *Take angle measurements for the curved front pieces from working drawings.*

Dovetails on the skew. *Holmes cuts the dovetails on the skew rather than flattening the face where the joint comes together. While tricky, it adds to the subtle details of superb craftsmanship of the piece.*

Plinth raises the piece off the ground. *The plinth makes the box look less like a box and provides a structural base for the cabinet.*

plinth and 2-in.-high cornice—are also traditional, even classical. As far back as the Egyptians, architects have used the plinth to raise a box off the ground and, in a sense, put it on display. They added a cornice on top, like a crown, terminating the structure with a flourish. Furniture makers have used both elements extensively.

My plinth is slightly larger than the box it supports, and simple moldings make the transition between the two elements.

A bead molding announces the beginning of the cornice. The body of the cornice is the same size as the box, but the grain runs horizontally on the sides, setting it off subtly from the vertical grain of the box below. Set in slightly from the cornice body, the cove-molded top panel finishes the job.

Construction notes

Adding a curve, plinth or cornice is a time-consuming but rewarding way to make something special out of a simple box. I laminated the curved drawer front and rails for the plinth and cornice out of maple. I resawed the stock to about 3⁄32 in. thick, then pressed the pieces between male and female forms made of medium-density fiberboard (MDF). For more on this type of laminating, see *FWW* #145, pp. 56-63.

The plinth rails and legs were joined with mortise and tenons. Joining the curved front rail and leg required some careful layout but wasn't difficult to cut by hand or machine. The molding required slightly different cutter profiles for the curved and straight pieces to ensure an accurate fit at the corners. The molding was glued to the top of the rail-to-leg assembly. The plinth was screwed to the carcase through slots in the molding. The slots allow for seasonal movement.

The cornice was the trickiest element. I assembled the cornice frame, mitering the front corners. I attached the rabbeted cornice top to the frame, gluing the front edge and buttoning along the sides to allow for movement. Next, I attached the mitered bead molding to the carcase, gluing it down to the front edge and screwing it to the sides through slots, which allow the carcase to move. Finally, I glued the cornice assembly to the bead molding. □

Roger Holmes is a former associate editor of Fine Woodworking. *He lives in Lincoln, Neb., where he publishes books and works wood.*

Photos: Michael Farrell

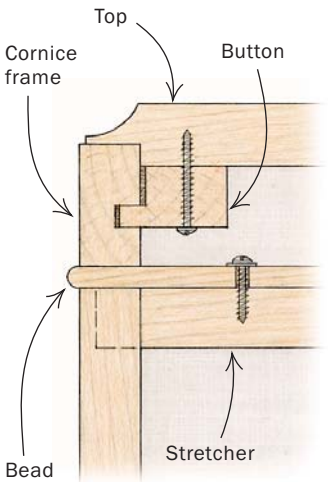

CORNICE DETAIL

AN ELEGANT CASE FROM TOP TO BOTTOM

Construction of this box is straightforward, except for the curved front. Holmes uses slotted holes for the screws where wood movement is likely to be an issue. The piece shown here is 18 in. deep by 19 in. wide by 28½ in. tall.

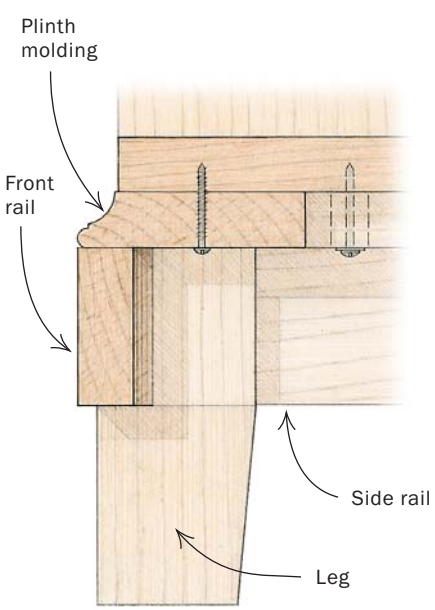

PLINTH DETAIL

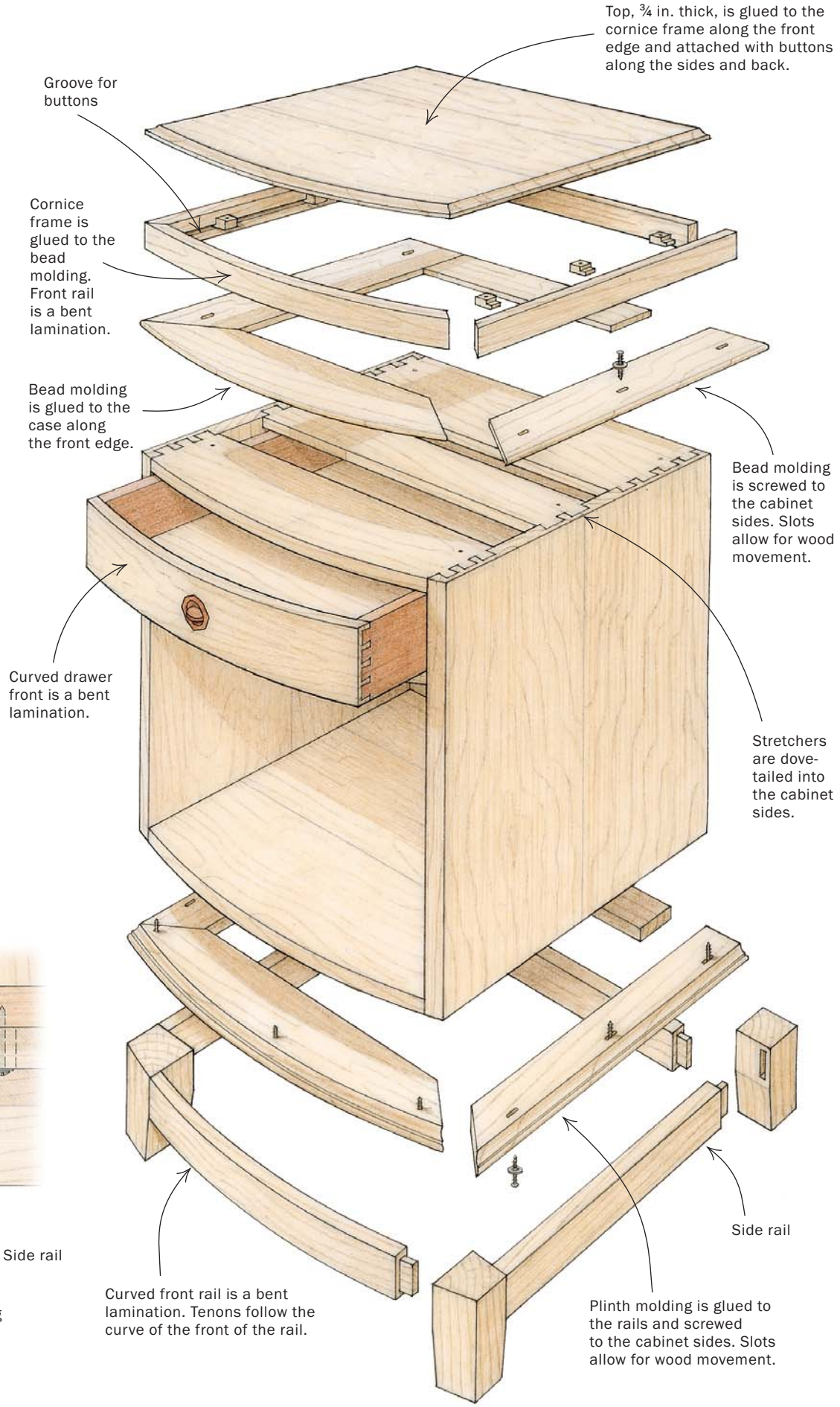

Drawings: Vince Babak