Fine WoodWorking®

Best Workshops

From the Editors of
Fine Woodworking

Fine WoodWorking

Best Workshops

From the **Editors of *Fine Woodworking***

The Taunton Press

The Taunton Press
Inspiration for hands-on living®

THE TAUNTON PRESS, INC.
63 South Main Street, PO Box 5506
Newtown, CT 06470-5506
e-mail: tp@taunton.com

EDITOR: Christina Glennon
COPY EDITOR: Marc Sichel
INDEXER: Jay Kreider
COVER & INTERIOR DESIGN: Carol Singer
LAYOUT: Cathy Cassidy

LIBRARY OF CONGRESS CATALOGING-IN-PUBLICATION DATA

Fine woodworking best workshops / editors of Fine woodworking.
pages cm
Includes index.
E-Book ISBN 978-1-62710-722-8
1. Woodshops. 2. Woodwork--Equipment and supplies. I. Fine woodworking. II. Title: Best workshops. III. Title: Best work shops.
TT152.F56 2013
684'.08--dc23
2012042125

PRINTED IN THE UNITED STATES OF AMERICA
10 9 8 7 6 5 4 3 2 1

This book is complied from articles that originally appeared in *Fine Woodworking* magazine. Unless otherwise noted, costs listed were current at the time the articles first appeared.

ABOUT YOUR SAFETY: Working wood is inherently dangerous. Using hand or power tools improperly or ignoring safety practices can lead to permanent injury or even death. Don't try to perform operations you learn about here (or elsewhere) unless you're certain they are safe for you. If something about an operation doesn't feel right, don't do it. Look for another way. We want you to enjoy the craft, so please keep safety foremost in your mind whenever you're in the shop.

ACKNOWLEDGMENTS

Special thanks to the authors, editors, art directors, copy editors, and other staff members of *Fine Woodworking* who contributed to the development of the chapters in this book.

Contents

Introduction

When it comes to woodworking, people get caught up in gearing up. And that's understandable, since the right tools often spell the difference between fun and frustration. But the space you work in is just as important. Are you warm enough there? Can you see well enough to do your best work? Is it a jumble of loose lumber, tools, cords, and sawdust, or is it clean and organized, with everything at your fingertips and nothing underfoot? Do you have a rock-solid workbench with good vises, ready for fine handwork?

If the answer to any of these questions is no, you are probably experiencing some level of frustration every time you go out, or down, to the shop. You might even hesitate to go in the first place.

That's why you need this special compilation from the pages of *Fine Woodworking*. Drawn mostly from the magazine's most popular issue, the *Tools & Shops* annual, these articles cover every aspect of a comfortable and hard-working space, whether you are starting from scratch or upgrading the shop you have.

Leaving no stone unturned, *Fine Woodworking Best Workshops* starts with the overall structure and layout, and then covers your best options for climate control, lights, wiring, dust collection, workbenches, cabinets, lumber racks, and much more. And we don't forget the basement woodworker either, with a special chapter on working down under.

Start upgrading your shop today, and you'll be surprised at how much fun woodworking becomes.

—Asa Christiana
Editor, *Fine Woodworking*

The Wired Workbench

JOHN WHITE

In a modern shop, a lot of work gets done with power tools such as routers, biscuit joiners, and random-orbit sanders. But most of us use them on benches designed around handplaning, which means everything from the height to the mass to the vises and benchdogs is geared toward hand-tool use. So the editors at *Fine Woodworking* decided to build a bench designed for power tools. They posted a blog on www.FineWoodworking.com, asking readers what they thought a "wired workbench" should be. A lot of great suggestions came in, and being a veteran of the shop and an inveterate inventor, I was given the task of distilling readers' ideas into a user-friendly whole.

Power tools need electricity to run and they make dust by the fistful. So most people agreed that the first thing this bench needed was a built-in source of electricity and dust collection. I kept things simple by attaching a commercially available automated vacuum outlet, the iVAC switch box, that turns on the dust collection when you power up the tool. And I made room in the base for both a shop vacuum and an Oneida Dust Deputy, a miniature cyclone that has proven its value trapping the fine dust (and all of the chips) before it gets to the vacuum and clogs the filter (see "A Revolution in Dust Collection," p. 74).

Collect the dust, forget the fuss

Imagine locking down your workpieces quickly and using your portable power tools without any dust or distractions.

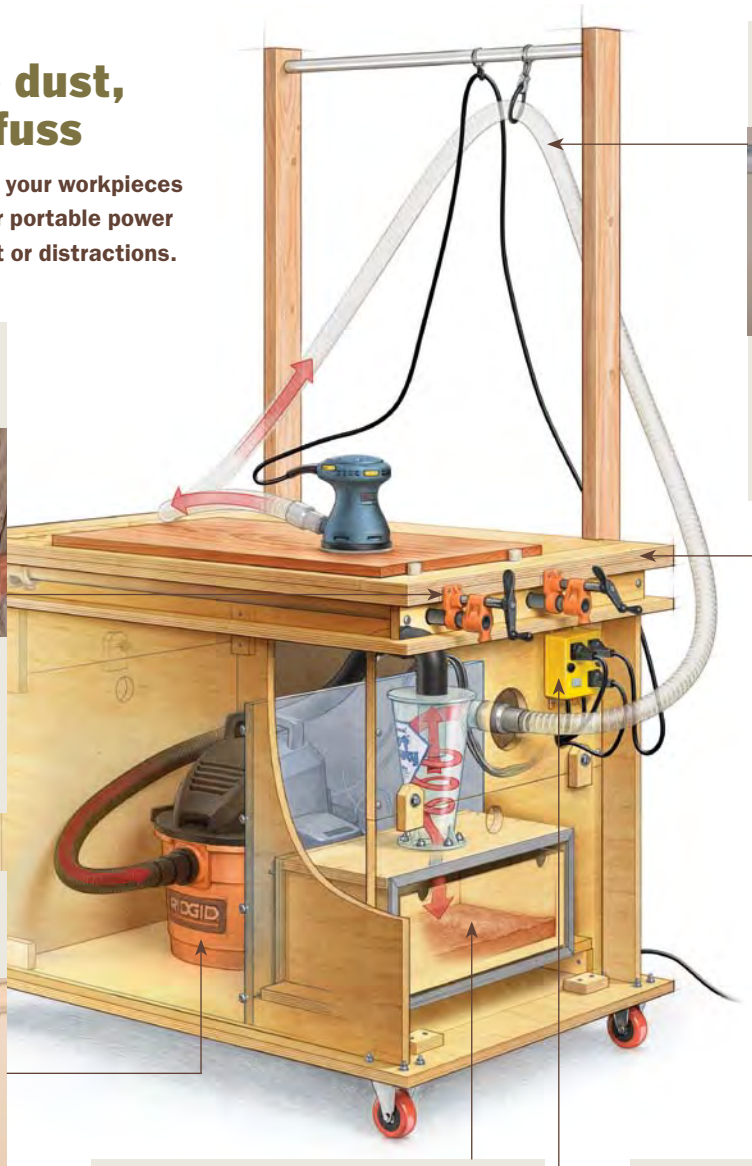

SMART VALET FOR CORDS AND HOSES

A simple hanger system manages these necessary evils, so they don't drag and disrupt your work.

CLEVER CLAMPING IS BUILT IN

Pipe clamps apply the pressure, and low-profile dogs stay out of the way of your tools.

HIGHER THAN A HAND-TOOL BENCH

Traditional benches are lower, so you can bear down on your bench planes. But power-tool tasks like routing and sanding are better at belly height.

SHOP VACUUM AT THE READY

Put a small vacuum in the cabinet and leave it there, ready to work. That way, you won't forget to hook it up or be tempted to do without.

DUST EMPTIES EASILY

The Dust Deputy grabs 99% of the chips and dust, dropping them into a box that's easy to empty and keeping the vacuum filter clean.

ONBOARD POWER

Plug your power tools into an automated vacuum switch that turns on the vacuum when you turn on the tool. It also runs the vacuum for a few seconds after the tool powers off.

Build the base first

Rather than fill the interior with drawers, we designed it to hide and muffle a shop vacuum and hold a dust separator. Construction is simple and solid: ¾-in. plywood and drywall screws.

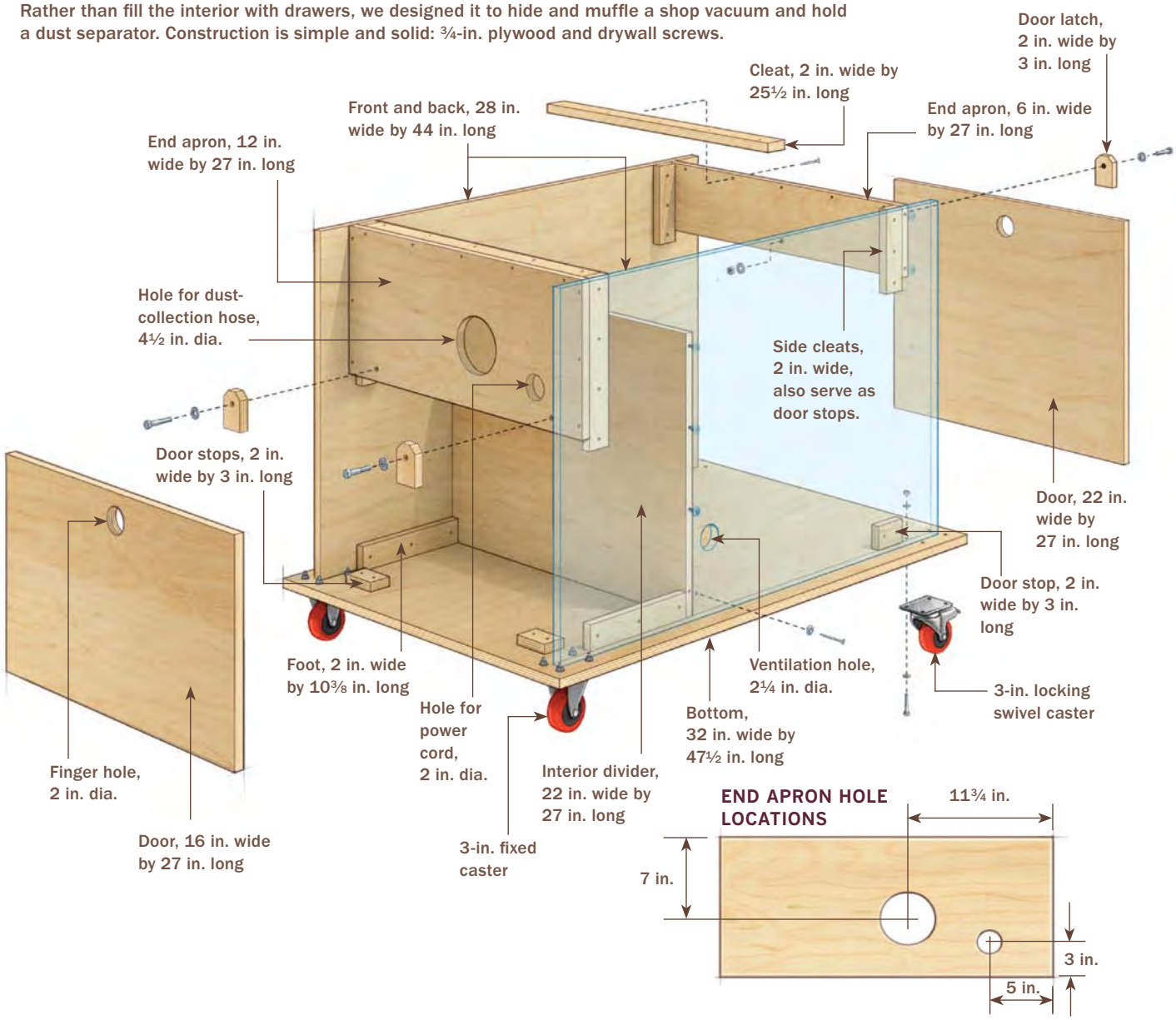

This wired workbench also is taller (38 in. total) than traditional benches, moving the tool and the workpiece up to a height where you have better vision and control. It's wider, too, but not as long. I got rid of the traditional front and tail vises, opting for a simple but effective clamping system made from two pipe clamps. The benchdogs have soft heads that hold workpieces firmly, but won't dent or mar them. And there are locking casters underneath to make the bench mobile.

Finally, the wired workbench is much easier to make than a big, heavy traditional

Get a third hand for assembly. White used a simple plywood corner block to hold parts still and square to one another while he drove in screws.

Sources

DUST-DEPUTY MINIATURE CYCLONE
www.oneida-air.com
No. AXD001004
(90° elbow,
No. AHA000004)

IVAC SWITCH
www.ivacswitch.com

Add aprons for stiffness. Screw through the face into the cleats. On the cyclone end, predrill holes for the vacuum hose and power cords with a circle cutter.

bench. Because it won't take the forces a hand-tool bench does, the entire bench is made from plywood. And there is no complicated joinery, just butt joints held together by screws. Where they show, I've used stainless-steel deck screws and finish washers for a clean, modern look.

If you already have a heavy hand-tool workbench, this one will make a great, mobile, secondary workstation. And if you rely mostly on power tools, this might be the only bench you need.

Mini-cyclone drops dust into a bin

A mini-cyclone separates chips and dust out of the vacuum's airflow, dropping them into an easy-to-empty dust bin below.

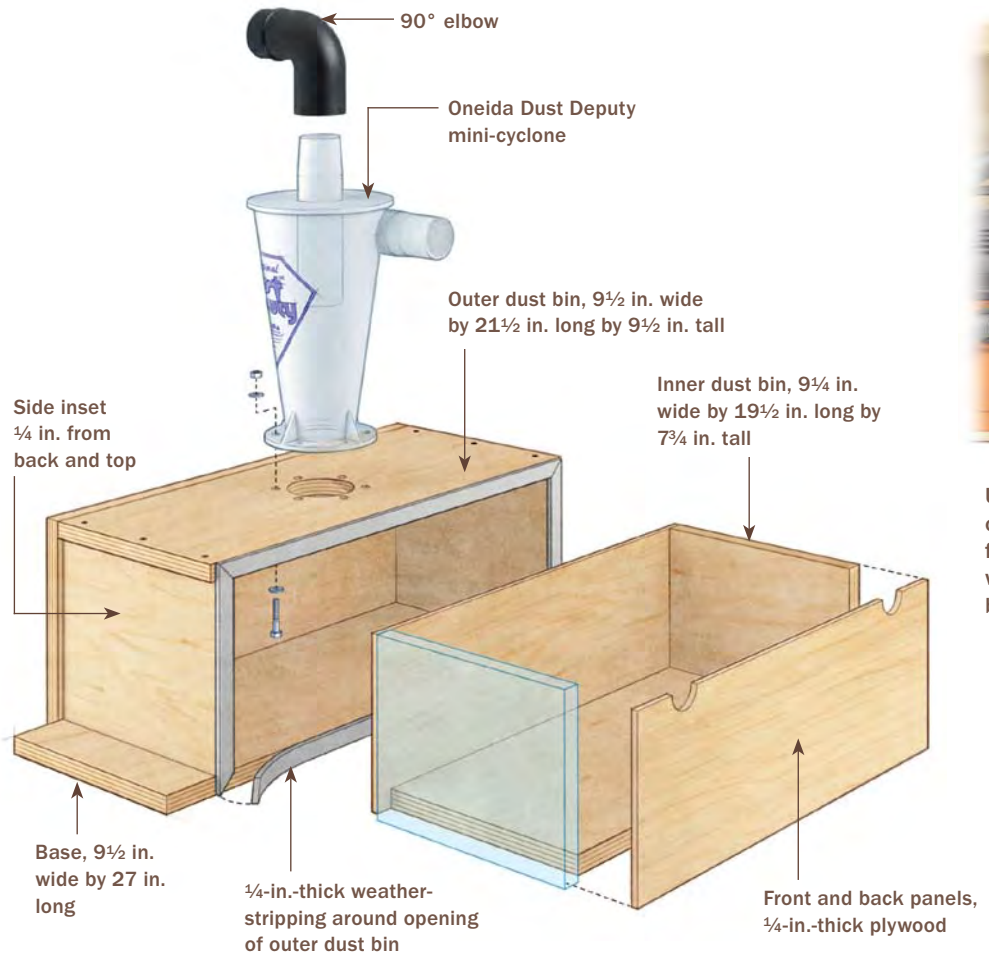

Fine-tune the air seal

A door on the cabinet presses tightly against weatherstripping on the dust bin, so the inner bin can be loose. Stops at the bottom and latches at the top of the door create even pressure.

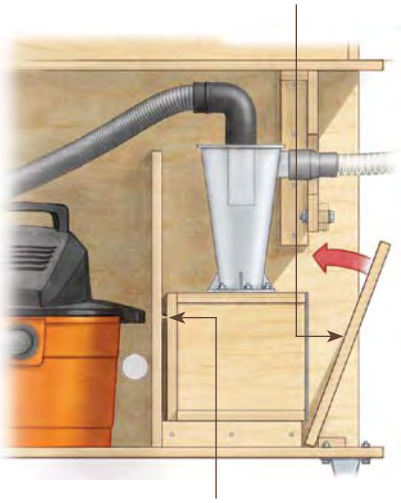

Use drywall screws on the back of the dust bin to push it back and forth to fine-tune how much the weatherstripping is compressed by the door.

The base is a dust collector

It's not too difficult to cut accurate parts from plywood. (For a few tips, see "Best-Ever Outfeed Table" on p. 125.) I'll skip over that process now and just explain how the parts go together.

I put the vacuum and the mini-cyclone in the base for two reasons: First, enclosing the vacuum muffles it. Second, it makes the bench a self-contained unit. There's no vacuum trailing behind it like a baby elephant behind its mother.

Start assembling the base with the bottom panel, predrilling holes for the casters. Then attach the front panel to the bottom. Screw the interior divider to the base and then to the front panel. Next, attach the back panel to the base and divider, but before you do,

Weatherstripping makes an airtight seal. Miter the corners with a chisel after you apply the stripping, and glue the corners together with cyanoacrylate glue.

Put the Deputy on the case. To create an airtight seal, apply a bead of acrylic caulk to the mini-cyclone's flange before putting it on the bin.

Connect the vacuum to the mini-cyclone. A 90° elbow makes the tight turn under the bench's top without restricting airflow like a crimped hose would.

drill the ventilation hole (the power cord for the iVAC switch also passes through this hole).

An apron runs across the top of the door opening at both ends of the base. Each apron is screwed to plywood cleats. The top cleat attaches the top assembly. The side cleats serve as door stops. After assembling the aprons and cleats, screw them between the front and back panels.

Then turn over the base and bolt the casters to it. Flip the cabinet back over and install the doors. Attach the lower door stops to the

Layered top has room for clamps

This plywood top assembly has a clamping system built into it. The layered construction makes it easy to create tongued channels for the sliding benchdog blocks and a cavity for the pipe clamps.

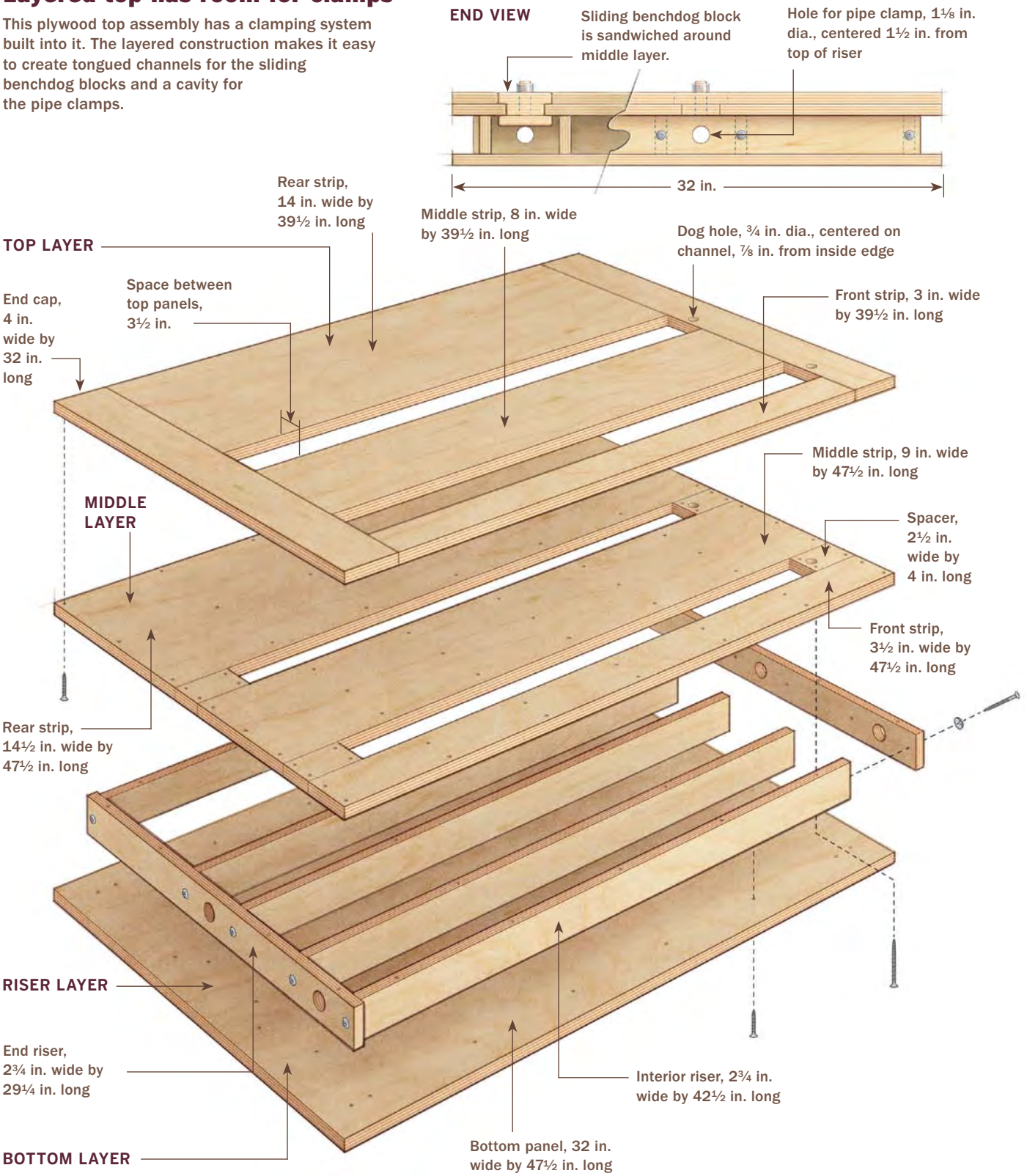

CLAMP DETAIL

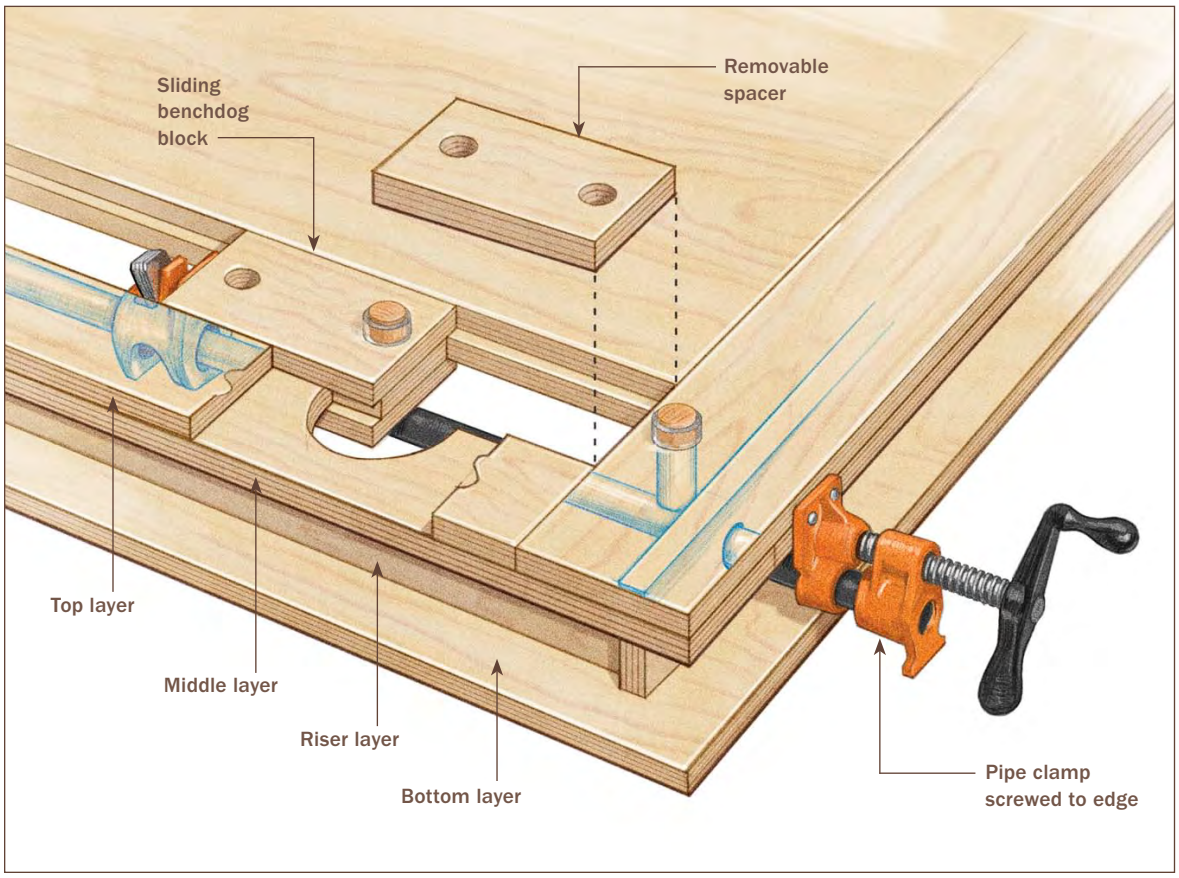

sides of the cabinet and to the bottom panel. Then screw the pivoting door "locks" to the apron.

Collect the dust in an airtight box— The Dust Deputy is a plastic cyclone typically attached to the lid of a 5-gallon bucket, which collects the chips and dust when they fall out of the cyclone. But such an assembly is too tall to fit inside the base cabinet, so I came up with another way to collect the debris. Of course, that meant overcoming a big challenge, because for the cyclone to work properly, the box needs to be airtight. Fortunately, I found an easy way to do that, because—and this is the cool part—you don't need any special tools or materials to make it.

The cyclone sits on top of a box, and inside the box is a removable drawer that catches the dust and chips. When it is full, you just open the box, pull out the drawer, dump it in a trash can, and put it back in.

The butt joints in the box are tight enough to prevent airflow, and the door can be used to create a tight seal around the opening. Just apply foam gasket—the kind used for weatherstripping on entry doors—around the opening for the door, mitering the corners and gluing them together using cyanoacrylate glue. When the door closes against the gasket, it creates an airtight seal.

To fine-tune how much the door compresses the gasket, I drove two drywall screws into the back of the outer dust bin. Adjusting the screws in and out moves the box farther from and closer to the door and compresses the gasket less or more.

Build the top two layers first. To connect the top and middle layers, predrill and countersink for the screws and use an offcut from the plywood to keep the edges aligned as you drive the screws.

Use spacers to locate slots for clamps. Make sure they're dimensioned and placed accurately, because they determine where you drill holes for the stationary benchdogs.

Drill for the stationary benchdogs. Leave the spacers attached and drill through both pieces at once. Use scraps to support the far end of the assembly.

Add the riser frame and sliding dogs. Screw down through the frame pieces and into the top.

Finally, to complete the airtight box, apply a bead of acrylic caulk around the opening for the cyclone before bolting it in place.

The top is a vise

The cool thing about this top is that, like my new-fangled workbench, it has a clamping system built into it. All you need are two ¾-in. pipe clamps—this bench is designed for Jorgensen No. 50 Pony clamps—some ¾-in.-dia. dowel, and ¾-in.-internal-dia. vinyl tubing. The dowel is cut into short lengths to make benchdogs, and the tubing slides over the dogs to keep them from marring or denting your work, something you don't want to have happen when you're sanding a door just before applying a finish.

Here's how it works. A block of plywood with a dog hole drilled in it is pushed against the sliding jaw of the pipe clamp. The other jaw is fixed to the apron. You can move the sliding jaw wherever you need it, and the dog hole moves along with it.

The top is made from layers of plywood strips, but it is plenty rigid for power-tool work (and some hand-tool work like light planing). Screw the top and middle layers together. Mark the locations of the stationary

Make the sliding benchdog blocks

After drilling dog holes through the assembled blocks, take off the bottom layer and put the blocks in place. Three stacked pieces of blue tape, added after the dog holes are drilled, create enough play for the block to slide easily (use a knife to cut openings in the tape).

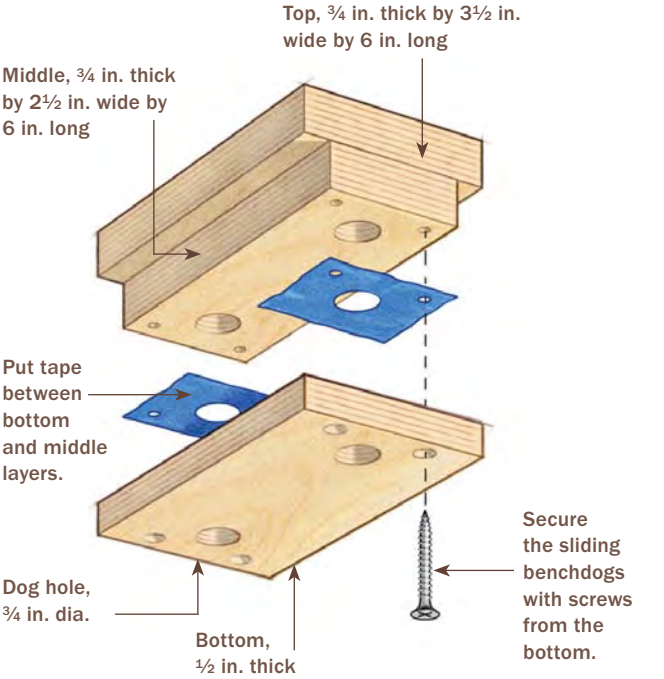

Install the pipe clamps. Put the bare end in and through the adjustable clamp head. Tighten it completely, and mark it where it's flush with the top's edge. Take it out, cut it to length, and put it back. Screw the fixed head to the bench through predrilled holes, so you can open and close it without holding the head.

Install the low-cost clamping system. Whether you're sanding or routing, the workpiece needs to be held still. White's ingenious "vise" is nothing more than ¾-in. pipe clamps and a clever system of sliding blocks and dogs, but it gets the job done and applies pressure close to the bench's surface—without sticking up and getting in the way.

Put the top on the base. It's heavier than it looks, but one person can do it. Screw through the cleats in the base, into the top.

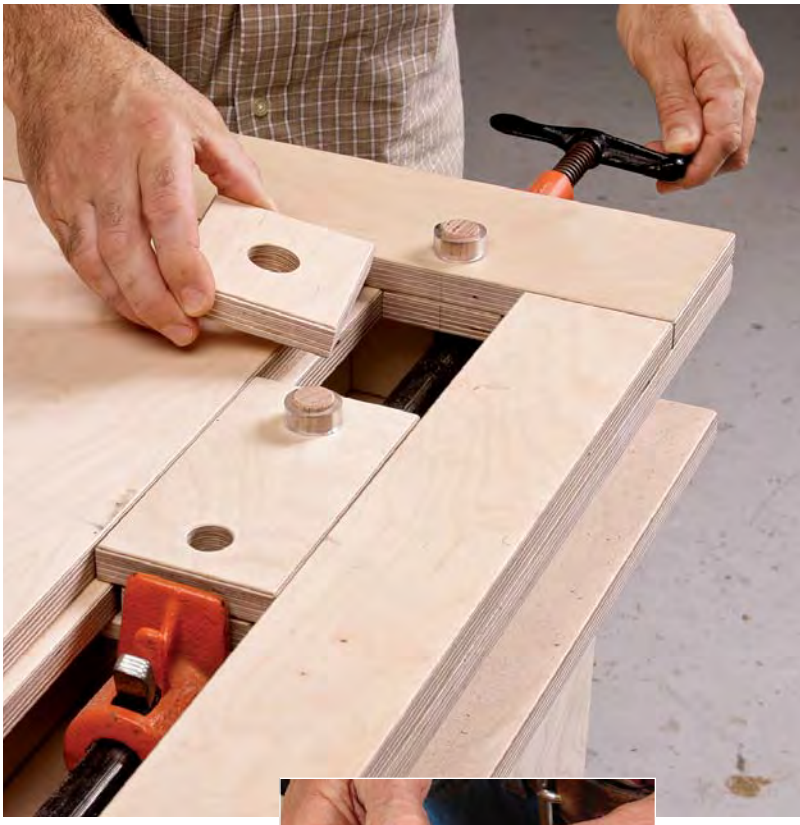

Low-tech benchdogs. A sharp knife is all you need to cut the plastic tubing that fits over the dowels (right) so they won't mar or dent workpieces. Use filler blocks to cover the slot (above). You need several of different lengths for complete coverage no matter where the benchdog block and clamp head are.

Tame hoses and cords from above

Nothing is more annoying than a cord or hose that continually catches and drags as you try to control a tool. White solved that problem with an overhead rack for both.

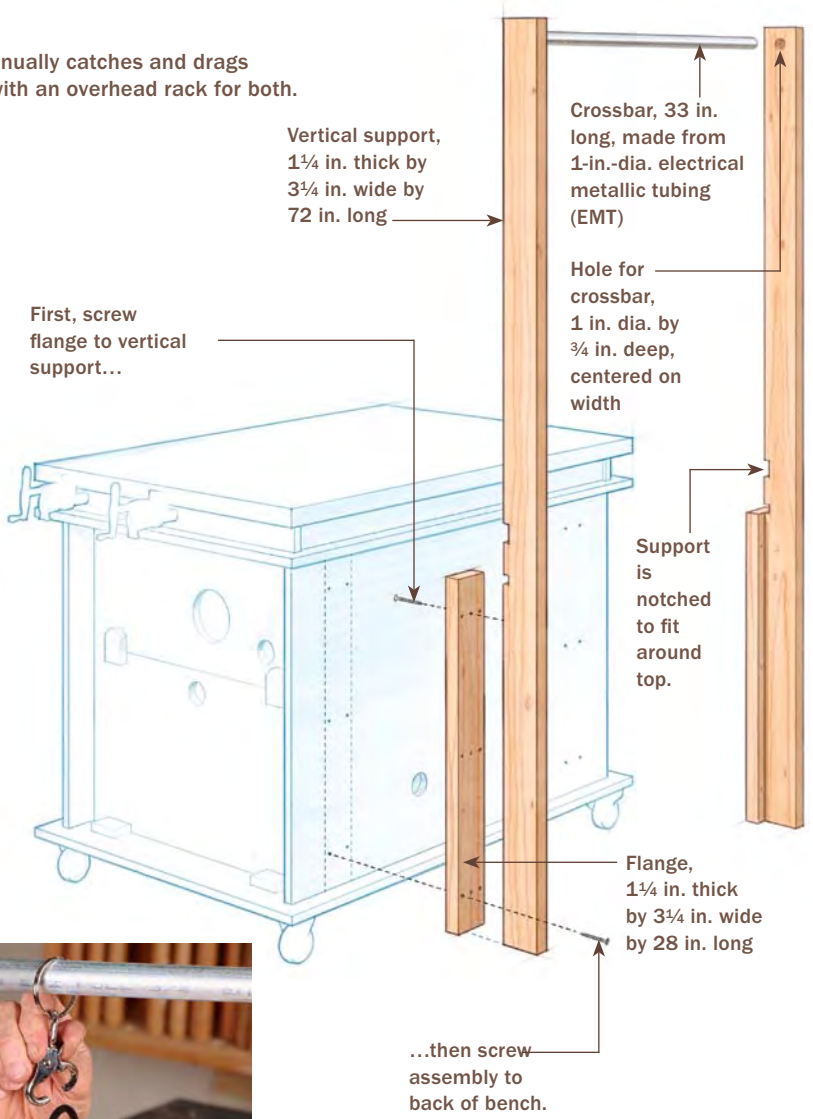

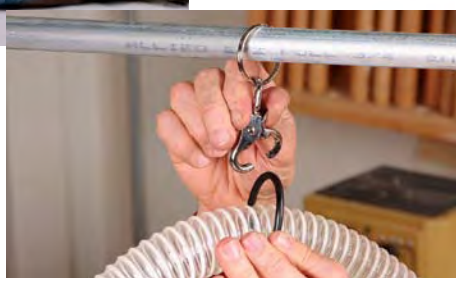

Elegantly simple. White used a key ring and O-ring bought at a local hardware store to suspend the hose. Another one holds the cord. They slide easily over the electrical tubing used for the crossbar.

benchdogs, partially disassemble the parts, and drill the holes.

Now that the basic structure of the top has been assembled, make and attach the riser layer. The two end risers need holes for the pipes to pass through. Drill them at the drill press.

Next, make and install the sliding benchdog blocks. Assemble the layers and drill a hole for the benchdog. Take off the bottom layer, add some tape to make the groove a bit wider than the tongue on the top, and install the blocks. Now attach the bottom panel to the risers. Then set the entire assembly onto the base and attach it by screwing through the cleats and into the bottom panel.

Make filler blocks for the slots. Then make some benchdogs from a length of dowel and slip some vinyl tubing over one end. Finally, install the pipe clamps.

Making Sense of Vises

GARRETT HACK

A good bench vise is nearly as useful as a shop apprentice. On my bench, I have a front vise and a large tail vise—I call them my right- and left-hand men. It's hard to imagine woodworking without them; they hold my work firmly so that I can concentrate fully on powering and controlling the tool I'm using.

In general, you'll find vises at two locations on a woodworker's bench: one on the long side of the bench, typically at the left-hand corner for right-handed woodworkers, and another on the short side at the opposite end.

The first, known variously as a side vise or front vise, matches the mental picture that most people have of a vise, with a movable jaw capturing work between it and the edge of the bench.

The second, called an end vise or tail vise, can clamp work like a front vise, but is more often used to hold boards flat on the bench, pinched between a pin or dog in the vise and another in one of the many holes along the benchtop. Together, these two vises can meet all of a woodworker's basic needs when it comes to holding work firmly and within reach.

Up front: a vise to clamp work vertically or on edge

A front vise, typically found on the bench's left-front corner, is ideal when you need to clamp a board to plane an edge, hold a chair leg while shaping it, or hold a board upright for sawing dovetails. The most common design is quite simple: a jaw of wood, or cast iron lined with wood, that moves with a single screw and a T-handle. The rest of the vise is mortised into the front edge of the bench. Mine opens about 10 in. and has about 4 in. of depth.

Many of the front vises on the market are fairly easy to fit to a benchtop. Look for one that has a large screw with well-cut Acme threads. These are the same square threads found on good clamps; they can smoothly deliver lots of force over a long life.

To hold long boards, wide panels, or doors securely on edge in a front vise, you need the added support of the deep front apron of the bench. Properly installed, the fixed half of the vise should be mortised into the bench so that the movable jaw clamps against the apron. This creates a great deal of stability, making it possible to clamp most boards on edge with no other support. For very long boards, just put one end in the front vise and rest the other on a short board clamped in the tail or end vise, much like a board jack on traditional benches. You can clamp a large tabletop vertically against the front edge of a bench, one end held in the front vise and the other held by a bar clamp across the bench.

A problem can arise, though, when clamping on just one side of the vise, such as when holding just the end of a much larger piece, clamping pieces vertically for laying out

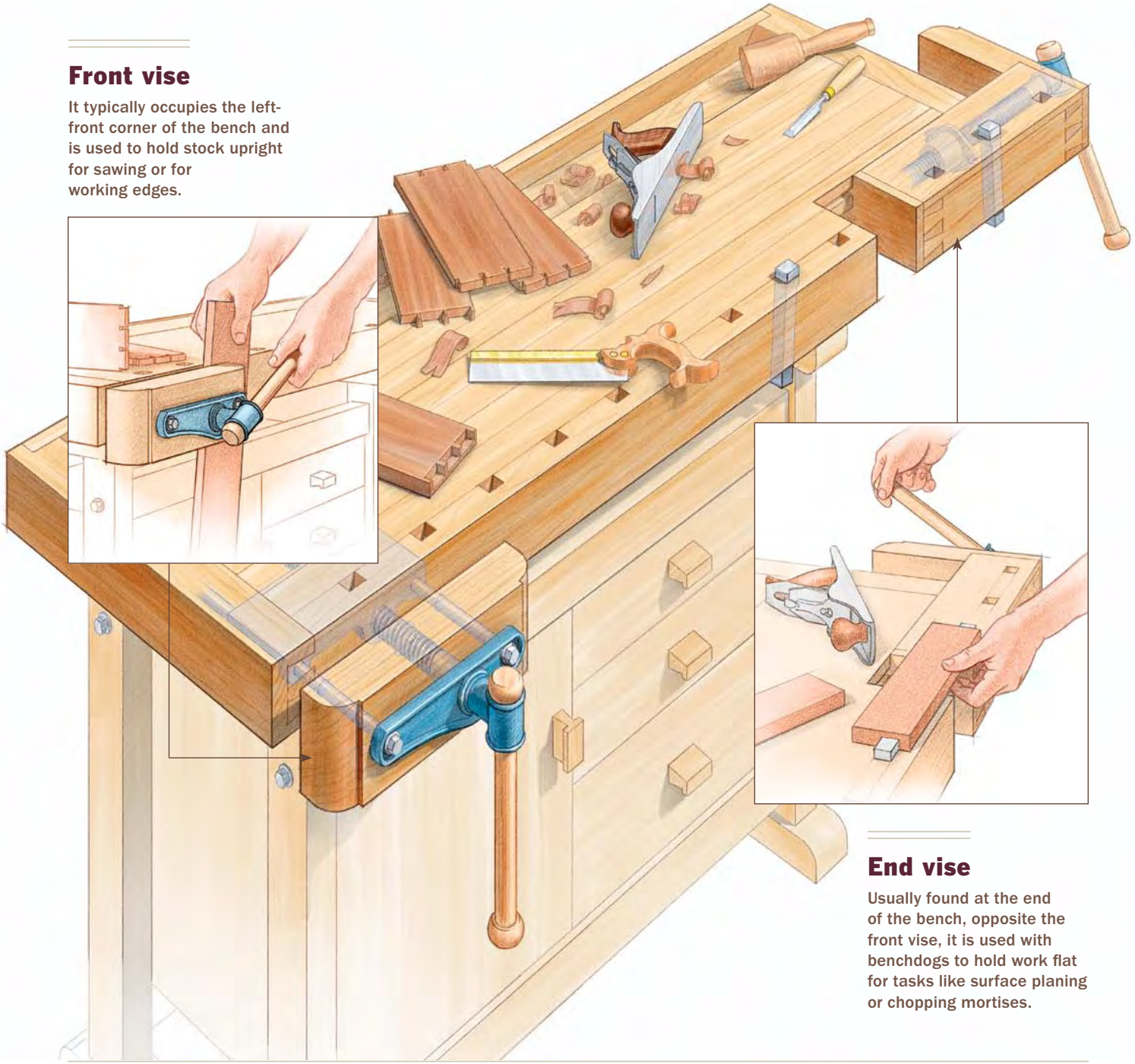

or sawing dovetails, or holding tapered or oddly shaped pieces. When one side of the jaw is applying all the pressure—or trying to—it is very hard on the screw and any alignment rods, and can even distort them. One solution is to slip a block as thick as the workpiece into the other side of the jaw (use a wedge for odd shapes). This keeps the jaws parallel so you can apply all the pressure you need. Some bench manufacturers equip their front vises with a threaded stop that does the same job.

A front vice holds work vertically for sawing dovetails or planing end grain. A scrap piece of similar thickness, clamped in the opposite side of the vise, prevents the vise from racking.

Hold wide workpieces on edge. The vise screw prevents a wide piece from going all the way through the vise (top). A clamp seated in a dog hole provides extra support (above).

Secure long boards on edge. A block clamped in the tail vise supports the opposite end.

Steady a wide panel. A sawhorse provides support underneath, with the opposite end clamped to the bench apron.

Types of front vise

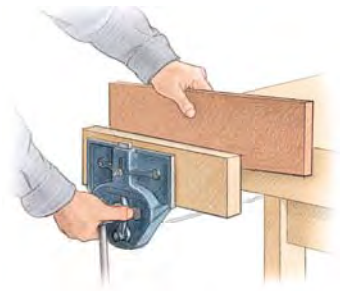

CAST IRON

The most popular front vise is cast iron. A steel rod or two keep the jaw aligned. Some also have a quick-action release for faster jaw adjustments.

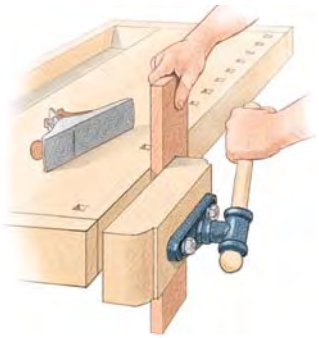

WOODEN-JAWED

A wooden-jawed vise operates like its cast-iron cousin. The movable jaw is typically made from the same material as the bench. Some models offer a quick-release option.

ARM VISE

An arm vise works well on wide boards. There are no screws or rods in the way. But the right-angled arm limits clamping force, which reduces the ability to clamp long boards horizontally.

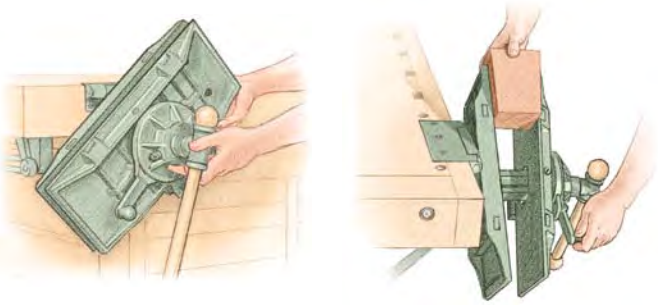

PATTERNMAKER'S VISE

A patternmaker's vise can hold oddly shaped work at any angle. The vise body can pivot up and over the bench until the jaws are parallel to the benchtop. The jaws also can rotate 360° and angle toward one another for holding tapered work.

Build it yourself. Many companies sell the hardware for these vises. Look for a large screw with square-cut threads.

At the end: a vise to hold work flat

At the other end of the bench, you typically will find one of two distinct types of vises, known as end vises or tail vises. Their main purpose is to hold work flat on the surface of the bench.

A traditional tail vise, with one row of dog holes along the front edge of the bench and several more in the movable jaw, allows you to hold work flat over nearly the entire length of the bench. This is ideal for holding long boards to smooth a face, bead one edge, or hold a leg while chopping a mortise. You can also clamp across the grain to bevel a panel end or shape the skirt of a chest side. Be careful to apply only modest pressure to hold the work, or you will bow it up.

An end vise holds work flat. Aligned with a row of dog holes, this vise has a wide capacity. It can hold smaller work and pieces nearly as large as the benchtop. It's ideal for smoothing a tabletop.

A secure grip for cross-grain work. The end vise allows you to clamp a panel across its width for tasks such as planing a bevel on the end.

For chopping, a spacer keeps the work off the vise jaw. The pounding could damage the vise. The best support is on the benchtop itself, right over a leg.

An end vise also handles awkward shapes. Pieces like this curved table apron can be held securely for scraping or other tasks.

The tail vise is also great for holding long or odd pieces at any angle—there are no screws in the way and the hefty construction tends to prevent racking on odd shapes. Also, it can hold a workpiece at right angles to the bench edge, ideal for planing an end-grain edge, shooting a miter on a molding, or paring a tenon shoulder.

One drawback with this vise is that the large movable jaw can sag. A misaligned jaw makes it difficult to hold work flat on the benchtop. Avoid chopping or pounding over the movable jaw; it isn't as solid as the benchtop itself. Support the work as much as possible over the bench, with the least amount of jaw open. I keep small, square blocks handy to shim my work toward the bench or protect it from the dogs. I shouldn't have to say this, but never sit on your tail vise.

Types of end vise

CAST IRON

Same vise, different location. The cast-iron front vise also works well as an end vise—a smart solution if you have room or money for only one vise.

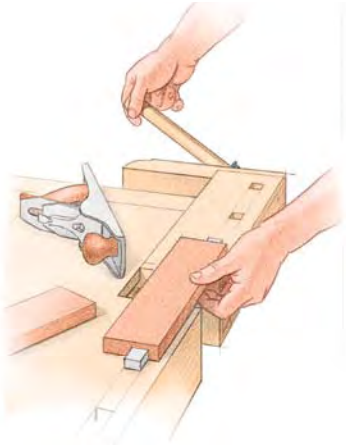

TAIL VISE

The traditional end vise. The movable jaw is a thick section of the bench's front edge, about 18 in. long. Dog holes hold work flat on the surface. The jaws also can hold work at an angle.

TWIN-SCREW

A twin-screw model can clamp wide stock vertically. A chain connects the two screws to prevent racking.

FULL WIDTH

A modern variation spans the width of the bench. With two rows of dog holes, the wide jaw of this vise is ideal for holding wider panels.

The guts.
Tail-vise hardware comes with instructions for making the wood components.

Another type of end vise—The other popular type of end vise looks and works like a front vise, except that the movable jaw is mounted to, and set parallel with, the end of the bench. If I had to outfit a bench with just one vise, it would be this type (see drawing, top left). My small traveling bench has an old front vise mounted on one end in line with a row of dog holes.

Some end vises of this type have a jaw that spans the entire width of the bench. Equipped with a dog on each end of the jaw, and paired with a double row of dog holes down the front and back of the bench, this is a great system for holding wide parts flat on the benchtop. Several ready-made benches are built this way. Lee Valley also sells the necessary hardware for making the vise yourself.

Your Miter Saw Needs a Stand

JOHN WHITE

These days, a miter saw in the workshop is about as common as a router. Woodworkers use the saw for everything from cutting up rough lumber to making perfect-fitting compound-miter cuts for a cabinet crown molding. I designed this stand to take care of just about any demand your miter saw throws at you.

A good stand can make any miter saw sing a sweeter song. This one has five features that make it stand out from the rest, turning a portable carpentry tool into a safer and more accurate woodworking machine. One feature we don't point out at right is how easy this cabinet is to build, with just two sheets of ¾-in.-thick plywood and a box of drywall screws.

Support for long pieces. Each fence extends outward by 15 in. That's helpful when you want to set up the stop for extra-long workpieces. A short shelf on each end supports those long boards (and cutoffs).

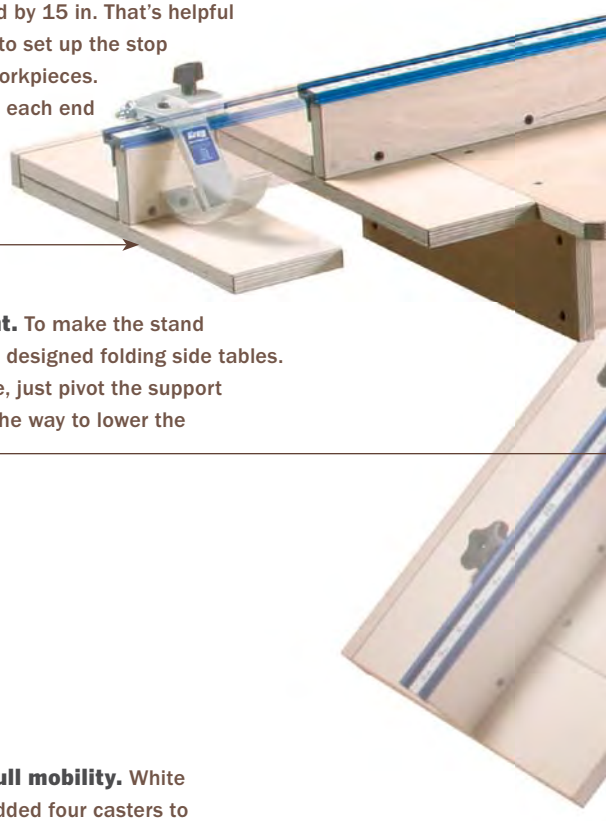

Small footprint. To make the stand compact, White designed folding side tables. When not in use, just pivot the support gussets out of the way to lower the hinged tables.

Full mobility. White added four casters to make the stand easy to roll around, a useful feature when the shop must give way to the family car. Available at Grizzly Industrial (www.grizzly.com), the casters swivel and include a brake.

Smart stop system. The stand has a sliding stop system from Kreg Tool (www.kregtool.com). The tape measure makes it easy to set up an accurate cut. The stop also flips up to let you trim one end of a board and then cut it to final length without moving the stop.

Automatic dust collection. The saw is attached to a dedicated shop vacuum. White put it inside the stand to minimize noise. A hardware-store-variety power strip with a 15-ft. cord, mounted to the inside of the base, holds a remote switch that turns the vacuum on and off with the saw.

The base is the foundation

Quick work. White uses a trim router with a ¼-in.-radius roundover bit to soften the edges on all the parts, including the holes drilled in the front and back of the base.

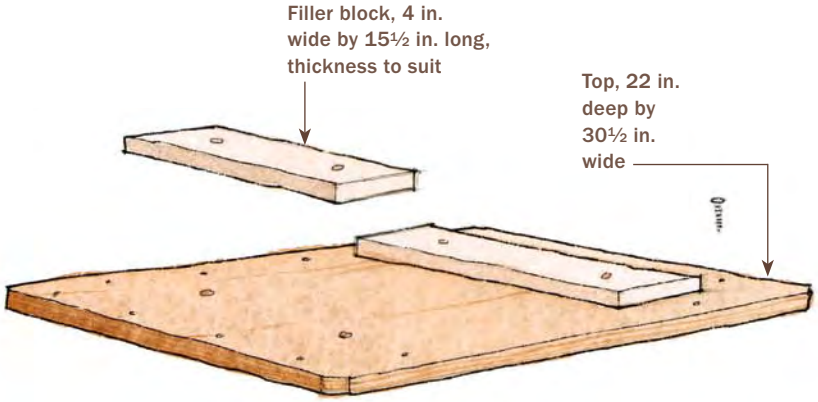

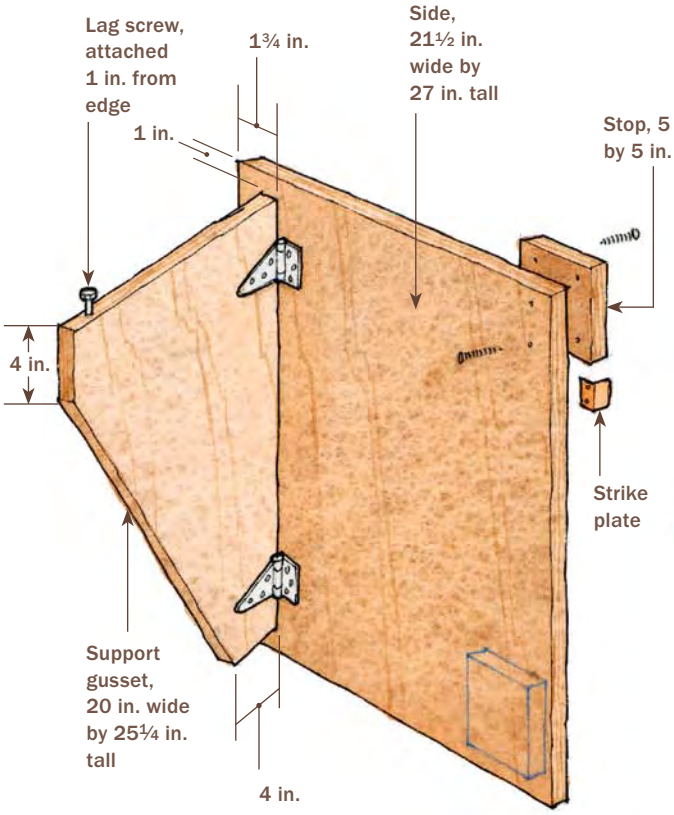

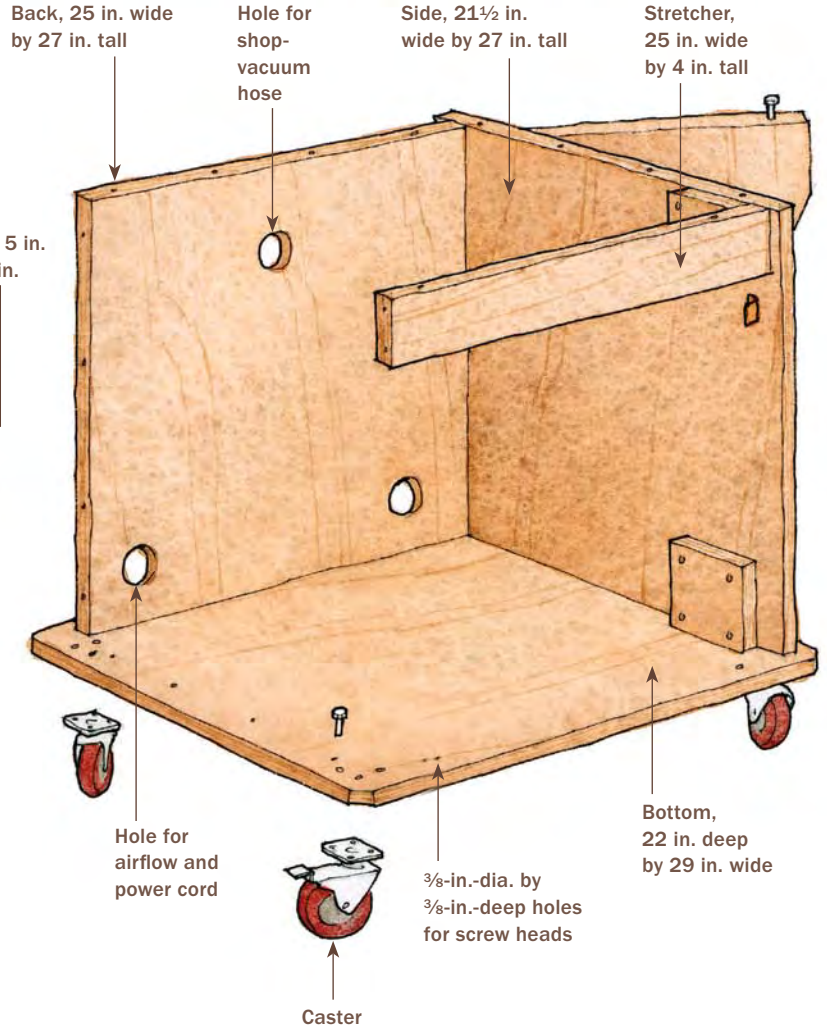

GET ALL THE PARTS FROM TWO SHEETS OF 3/4-IN. PLYWOOD

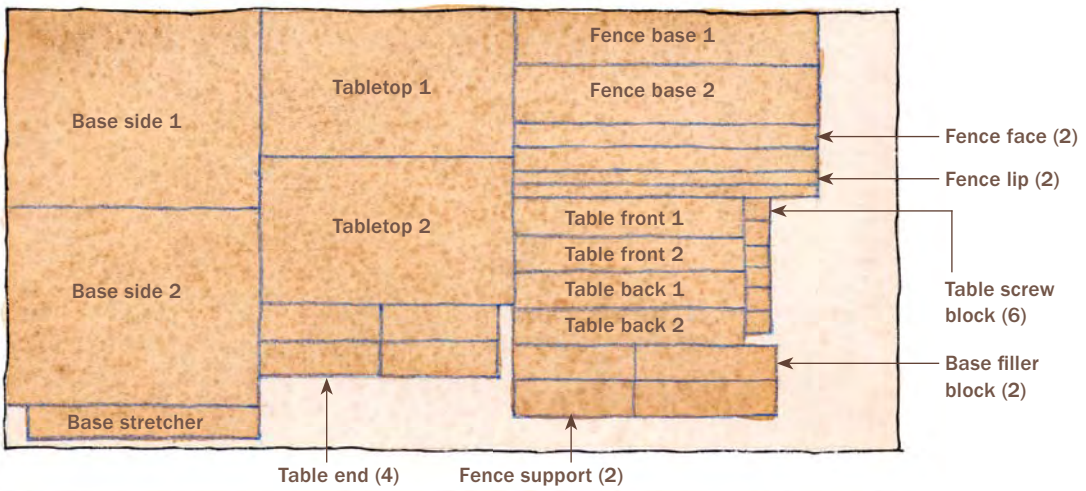

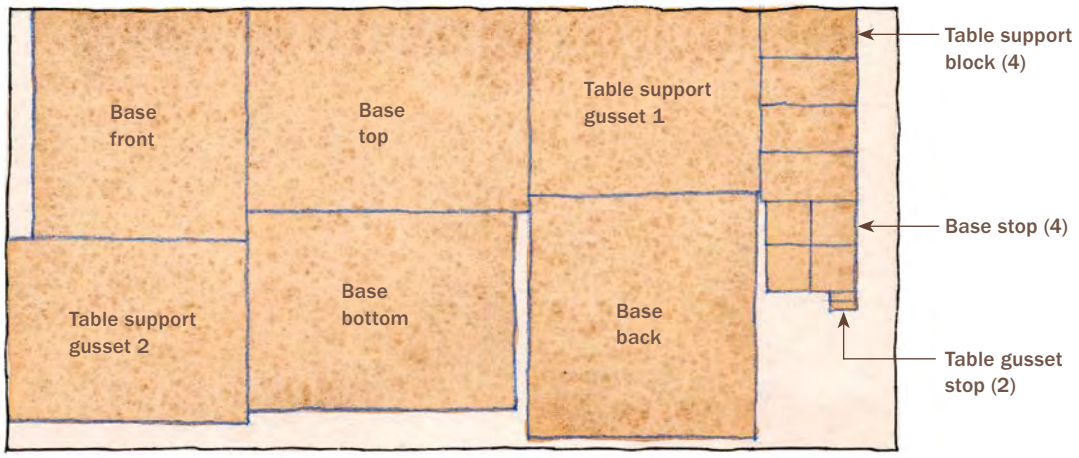

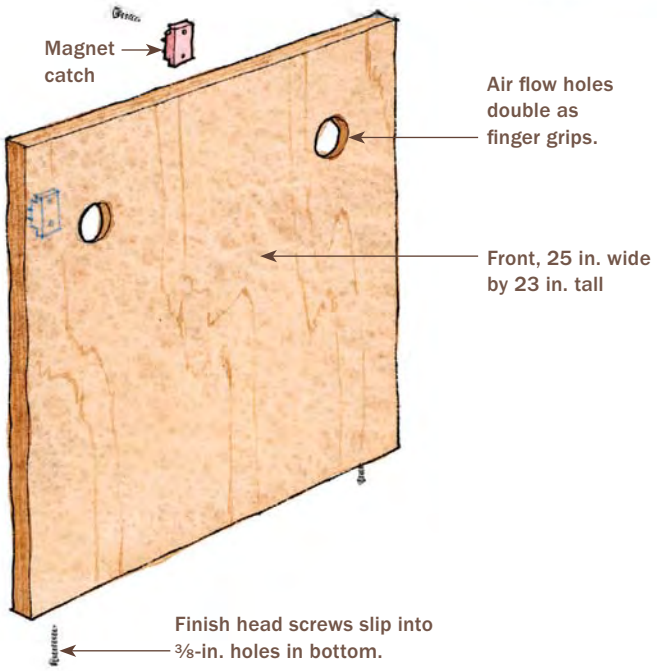

Start by making the base

The base supports the saw and holds the vacuum. It also serves as a platform for the tables and fences that are attached later.

I made the stand so the saw table would be at a height of 32½ in. That works for most people. But you can adjust the height to suit your needs.

Determine the base dimensions for your saw—The stand shown is designed to accept a Bosch 10-in. sliding compound-miter saw. Depending on the size of your saw, the length and width of your base might be bigger or smaller.

Clearance hole first. Each screw requires a shank hole and a shallow countersink for the screw head.

Pilot hole next. Align the parts and drill pilot holes into the plywood edges below. This makes them much less likely to split.

No glue needed. Drywall screws provide plenty of holding power, so there's no need to fuss with glue.

For other saws, there's an easy way to determine the side-to-side (length) and front-to-back (depth) dimensions of the top of the base. With the saw on your workbench, swing the blade all the way to the left and mark the extreme left-hand location of the saw handle. Then swing the saw all the way to the right and mark the extreme right-hand location of the handle. Measure the distance between the marks and add 2 in. This is the length of the top of the base.

To determine the depth of the base top, allow 9½ in. from the front edge of the top to the front face of the miter-saw fence. Then, at the back edge, add enough depth to ensure that all four of the miter saw's feet will end up on the surface.

Now you're ready to build. All of the base parts are joined with drywall screws. Drill an 11⁄64-in.-dia. shank hole and a 3⁄32-in.-dia. pilot hole for each screw.

The back and front have a series of 2-in.-dia. holes for the vacuum hose and for air-flow and power cords. The holes in the front panel also work as finger grips. I used a drill press and a Forstner bit to drill the holes, although a hole saw also can do the job.

Once the stand is assembled, mount the four casters. To avoid having a bolt run into the bottom edge of the front and back panels, I used only three bolts to mount each caster, not the normal four.

Add the side tables and fences

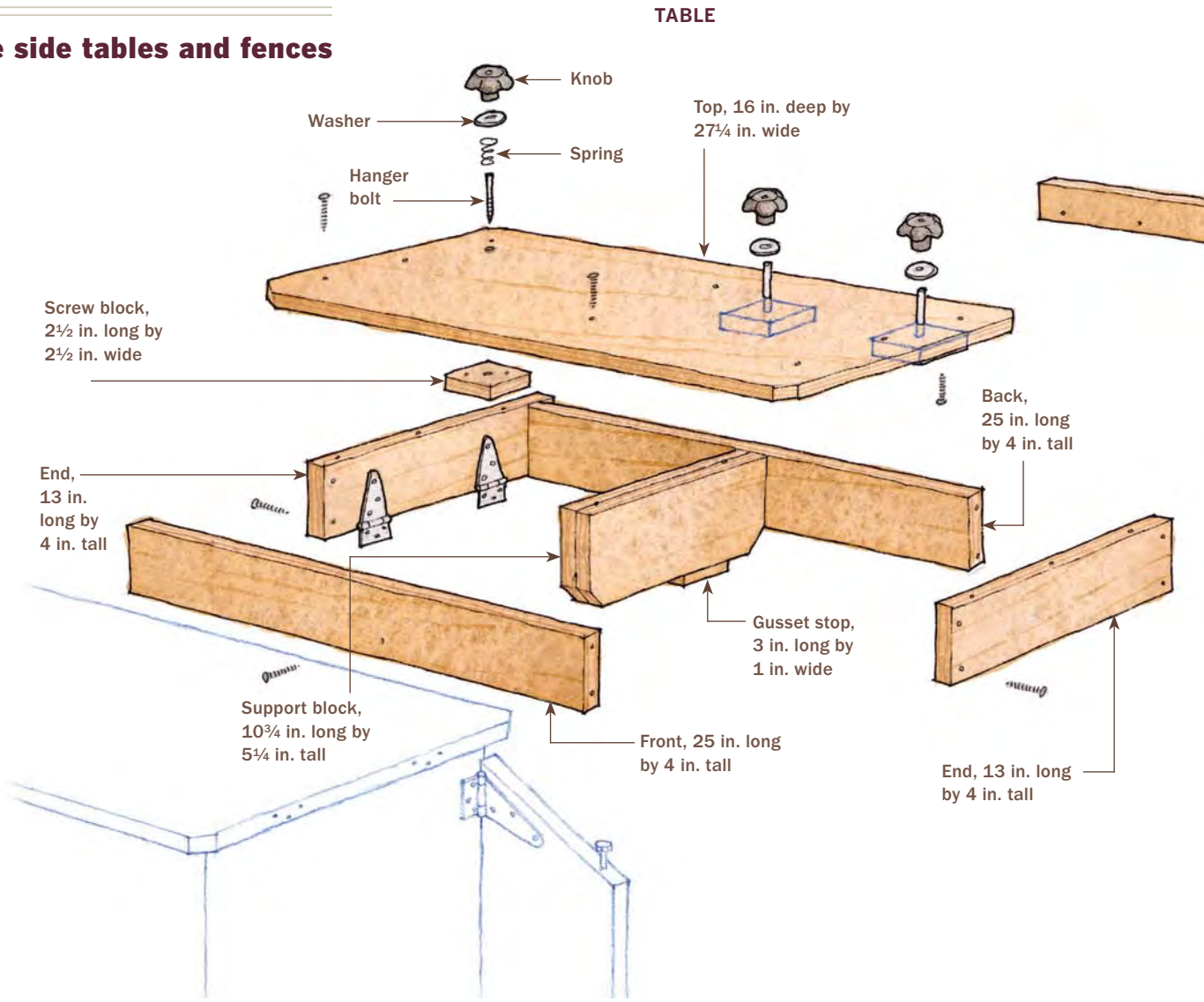

Make the two side tables

As with the base, the side tables are assembled with drywall screws. The support block in the center of each table is actually two pieces of stock face-glued together to make a single 1½-in.-thick piece. Cut the block to fit snugly between the front and back pieces of the tables. Add the stop, which positions the support gusset when it's under the table. Then mount a support block to each table by driving screws through the table sides and into the ends of the blocks. For additional reinforcement, drive a couple of screws down through the top.

Now mount the hinges, made by National Manufacturing Co. (www.natman.com, part No. N128-512). I bought them at a local hardware store and used the same kind to mount the tables and the support gussets. Next, cut the support gussets to size. A lag screw in each gusset allows you to adjust the tables parallel with each other. Check that the lag screw hits the stop at about the front-to-back midpoint of the table.

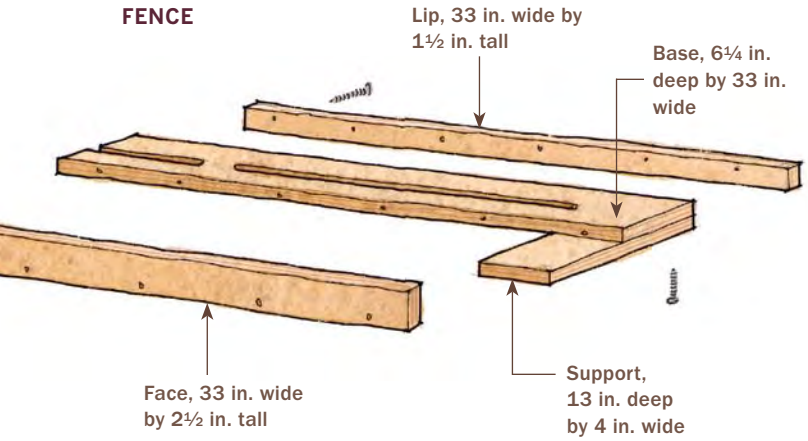

Assembly tip. A stop block clamped to the ends of the table makes it easier to establish the ½-in. inset for the front and back pieces.

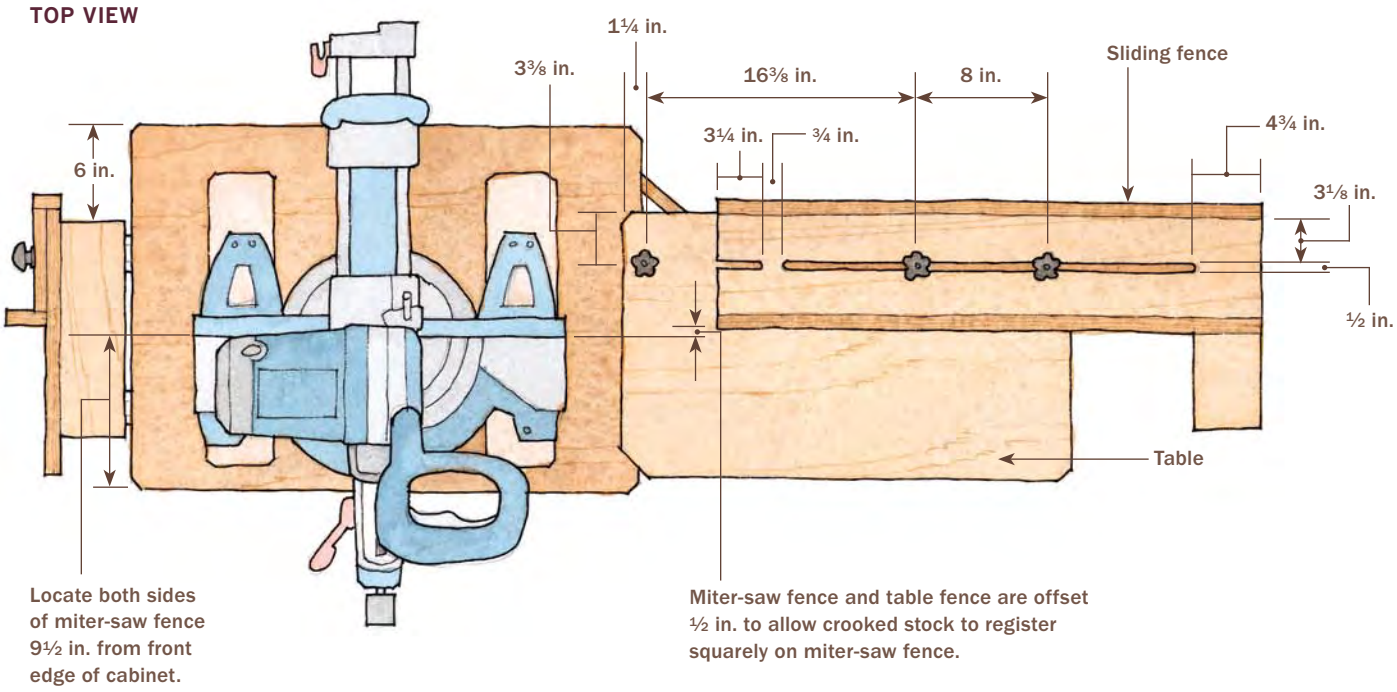

To level the saw table with the side tables, install filler blocks on top of the base. Use solid stock so you can plane down the blocks until the miter-saw table is flush with the stand tables. Using filler blocks here gives you some room for height adjustment if you happen to replace your saw.

When bolting the saw in place, locate the holes so the miter-saw fence ends up 9½ in. from, and parallel to, the front edge of the cabinet. Cut the bolt holes oversize so you can make adjustments to the saw location before locking it down.

Cut the grooves. With a ½-in.-dia. straight bit in the router table and an outside fence acting like a featherboard, White makes the short end-groove cut first (left). To create the long stopped groove, the stock is slowly lowered into the bit from above, then fed forward or backward as needed to complete the groove.

Assemble the lip and face. After the base of the fence is grooved, the lip and face are screwed in place.

The fences hold the stop blocks

The base of each fence has two grooves—one long, one short—to accept the hanger bolts and knobs. These allow the fences to slide outward to support long boards. After assembling the fence parts, place a fence on each table and mark the location of the hanger bolts. Drill 11⁄64-in.-dia. holes for the ¼-in. bolts. To better support the bolts, screw blocks under each one. When driving in the hanger bolts, use two nuts on each of them so you can drive them with a wrench. Add the washers and nuts and check the fences for a smooth sliding fit.

The Kreg® track is next. Measure the fence, then use a hacksaw to cut the track to that length. Drill a few holes through the back of the track and use the supplied screws to mount it to the fence. Do the same on the other fence. Mount the measuring tape and the lift-up stop. Now you have the best chopsaw stand on the block.

Best-Ever Outfeed Table

JOHN WHITE

A good outfeed table is essential for safe woodworking because it allows you to control the workpiece as it moves past the blade and off the back of the tablesaw.

Without it, you'll have to push down hard on the back of long boards, which makes it difficult to guide them safely past the blade. An outfeed table also naturally doubles as a work surface for assembly and finishing. But the space beneath the table often lies unused, a wasted opportunity for efficient storage.

This outfeed table has a cabinet below that takes advantage of that space, with dedicated storage areas for the rip fence, miter gauge, crosscut sled, blades, and several big drawers for jigs. And there's plenty of shelf space for general storage, as well as room on the end panels for clamps. The large phenolic-plywood top is great because it's so slick that materials almost float across it. And because the surface resists stains and glue, it's perfect for assembly and finishing. I let the top overhang the base for easier clamping.

It's easy to adjust the table's height and level it, too. So if you move to a new shop, you won't need a new table.

Best of all, this outfeed table is not difficult to build. The hardest part may be dealing with the large sheets of plywood, but I'll offer tips that make breaking down and squaring the material easier. All of the joinery is simple. The cabinet itself is joined by butt joints held together by screws (I'll offer pointers on assembling the joints accurately). The drawers are joined by a rabbet-and-groove joint that requires only two tablesaw setups.

Materials improve function and ease construction

This cabinet is built entirely of sheet goods, except for two Douglas-fir runners. The top, drawer fronts, and kick plates come from a single 4x8 sheet of phenolic plywood. The cabinet is ¾-in.-thick Baltic-birch plywood, and the drawers are ½-in.-thick Baltic-birch plywood.

The entire table can be made more economically from medium-density fiberboard (MDF) or ordinary plywood, but you'll have to use connecting bolts with barrel nuts to make strong joints in the softer MDF. With plywood, you can use screws. And you'll need to apply a finish to the tabletop to toughen it and seal it against stains and glue.

Shelve your sled.
A dedicated shelf keeps the crosscut sled out of the way but easily accessible.

No wasted space. You can do glue-ups and other bench tasks on this table, so you'll need tools and supplies nearby.

Blades at the ready.
The bottom drawers are deep enough to store blades vertically, making them easier to identify and pull out.

Stow your fence.
A well-placed rack keeps the rip fence close at hand.

Basic anatomy

Baltic-birch and phenolic plywood combine for good looks, a sturdy base, and a low-friction top. Adjust the height shown here to fit your saw.

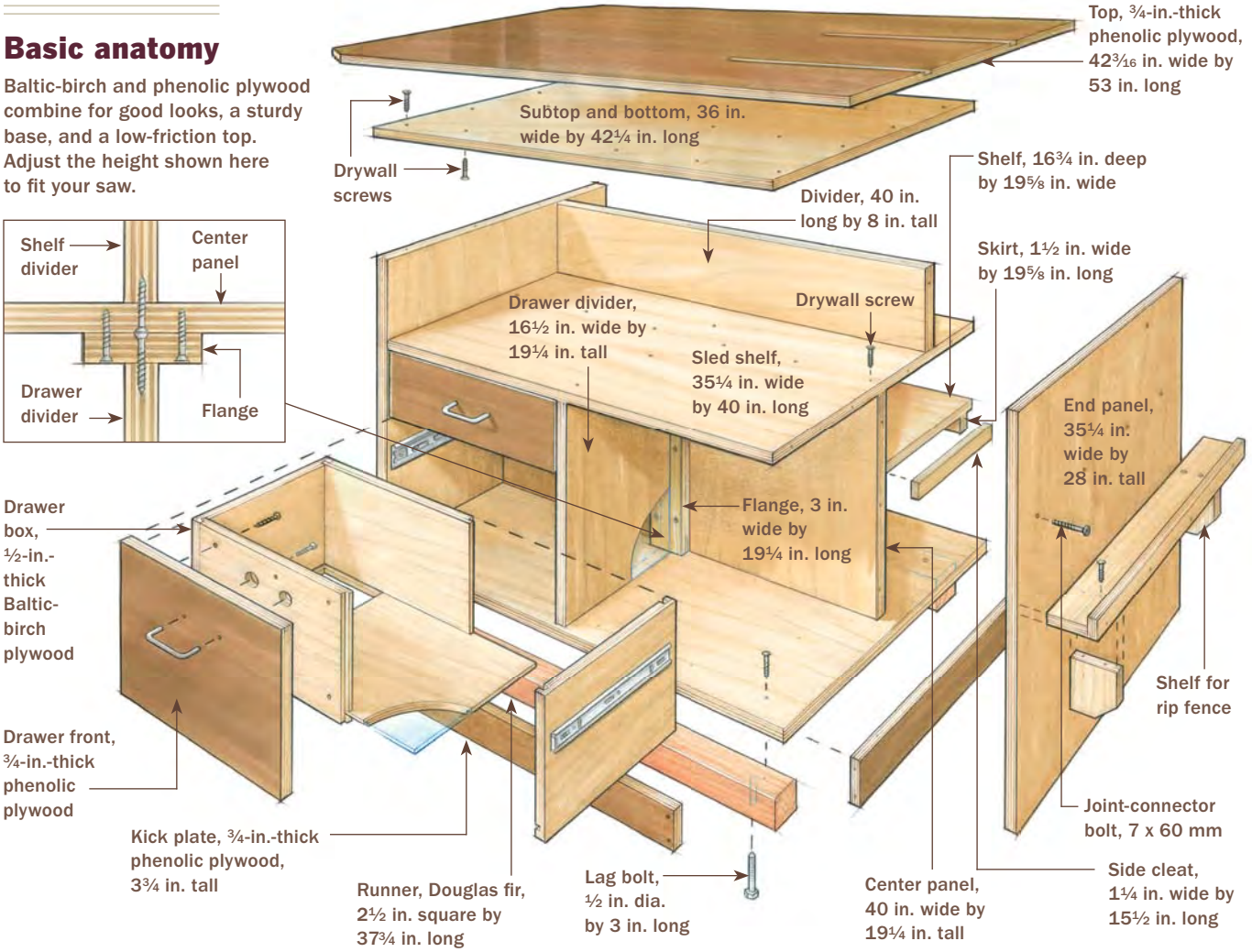

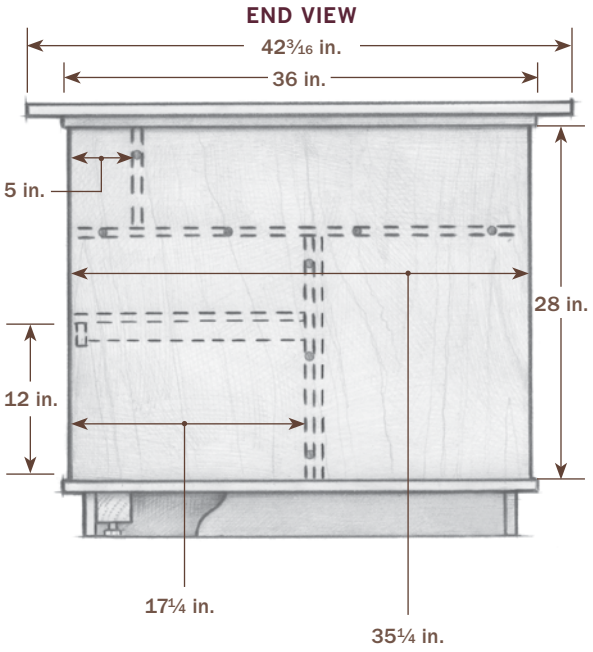

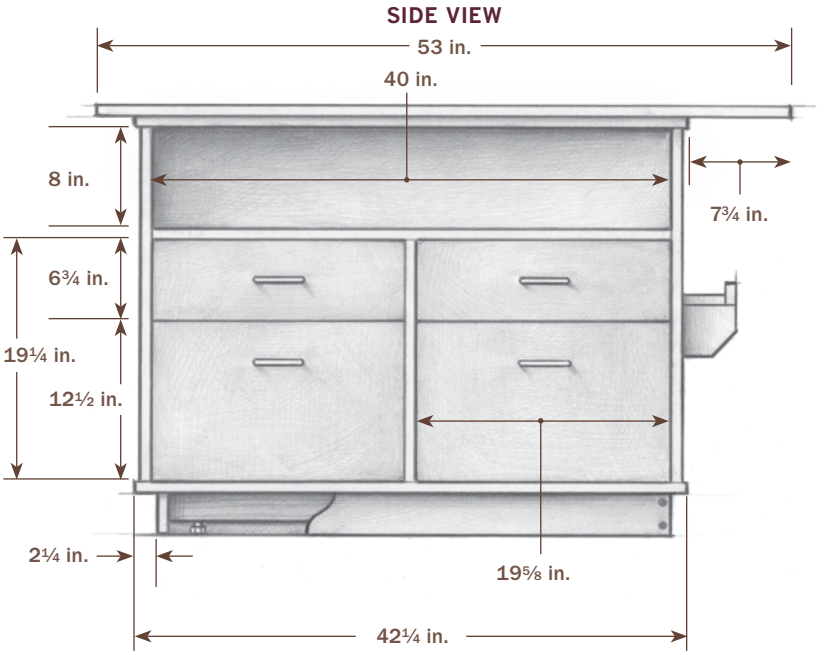

Precise plywood pieces

Use a circular saw and guide to square up factory-cut edges and to cut parts to a manageable size for the tablesaw.

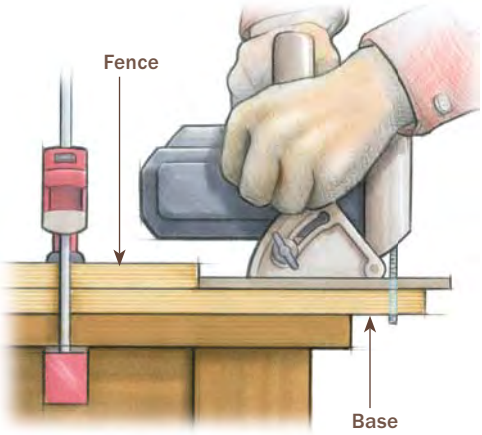

Make a cutting guide. Attach a fence to a slightly oversize base. Then trim the guide with a circular saw to establish a dead-accurate reference for lining up cuts.

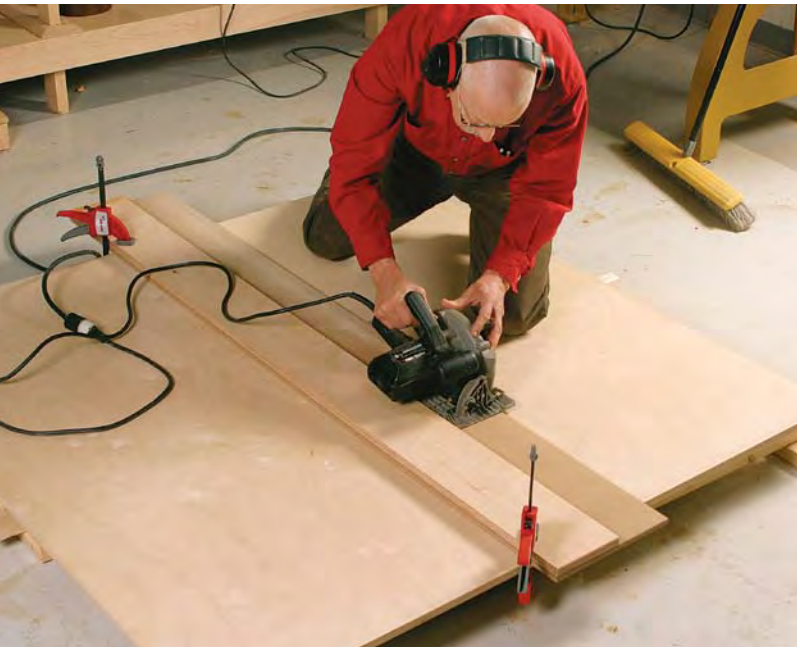

How to use it. Align the guide so that the first cut not only gives you a straight side, but also a square corner.

Clamping tip. When trimming the panel square, use a bar clamp to help hold it against the fence. A block at either end helps keep the clamp in position.

Joinery tips

Careful layout of joint locations and a few well-placed brads take the fuss and frustration out of butt joints. The layout lines show you where to drill, and the brads act as a third hand to hold the panels steady as you mark screw locations.

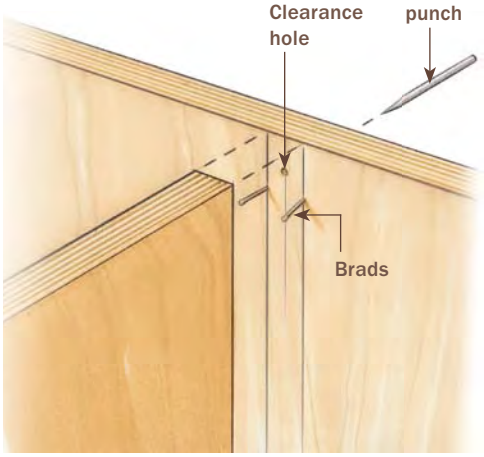

Drill along the centerline. Two lines show the edges of the intersecting panel. The third line marks the centerline for the clearance holes.

Brads are helping hands. Brads driven in along the edge lines will hold the intersecting panel in place as you transfer the location of the clearance holes. A pair at the top and at the bottom is all you need.

Transfer the pilot-hole locations. With the two panels aligned and held in place, slide a center punch through the outer panel and tap it to mark locations for the pilot holes. Disassemble the parts and drill the holes.

A guide for square panels

You can't rely on the factory-cut edges being square to each other, and full sheets are hard to handle on the tablesaw anyway. Solve both problems by using a circular saw and cutting guide to break down the sheet into smaller workpieces.

Set the guide so that it cuts an edge square to a factory edge. Use a sanding block to clean up the two square edges and then measure and mark the panel's final dimensions. Trim it to size on the tablesaw, running the square edges along the fence.

Bevel all edges on the panels with a chamfer bit. This prevents damage to the panels and adds a bit of safety. A square phenolic edge is very sharp and easily can cut you. Beveled edges also create crisp shadow lines at the joints, which I like.

Use a drill to start the screws. Drive in the joint-connector bolts, leaving them about 1/8 in. proud of the panel.

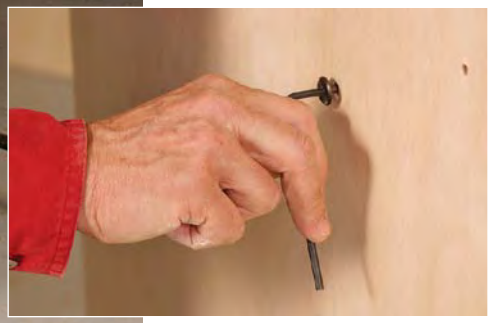

Hand torque brings them home. Use an Allen wrench to drive the bolts flush with the panel. A drill might over-drive the head or strip the pilot hole.

Screw joints are solid

All of the table's joints, except those in the drawers, are simple butt joints held together with screws. Where they wouldn't be visible, I used drywall screws. Where the screw heads are exposed, I used joint-connector-bolt wood screws (www. mcfeelys.com, #1423-CWB), which have large, bronze-colored heads that look good on shop furniture. Although these are called bolts, they're actually hefty wood screws that need aligned clearance and pilot holes drilled before you drive them home (see photos on p. 129 and above).

Butt joints can be hard to align and assemble, so I use a couple of tricks to make things easier. First, I mark where one panel butts

A logical order for assembly. Start with the core, assembling the end and center panels and tracing their locations onto the bottom. Next, mark centerlines, drill holes for the drywall screws, and then attach the bottom.

against the other. With these lines drawn, it's easy to tell where the joint is located and to drill accurate clearance or pilot holes along the centerline.

Once the clearance holes are drilled, you need to transfer their centers onto the edge of the intersecting panel so that you can drill pilot holes. But it's not easy to hold everything in alignment when you do that, so I drive a few brads into the edge lines drawn earlier to trap the panel and hold it steady while I transfer the centers. I pull out the brads with a claw hammer when the joint is together. The layout lines and small nail holes left behind are hidden inside the case.

Assemble the table in stages

I built my table in stages to avoid accumulated errors, but some parts should be cut in groups for uniformity. The cabinet's center panel can be cut at the same time as

Add the dividers. Attach the shelf divider first. Then install the flange (see drawing, p. 127) and drawer divider.

The sled shelf is next. Drive joint-connector bolts through the end panels into the sled shelf. Use drywall screws to secure the shelf to the drawer and shelf dividers.

Flip the cabinet to attach the feet. Lag bolts screwed into Douglas-fir runners make easily adjustable feet. After flipping over the cabinet, attach the runners with drywall screws.

Screws shouldn't show. After the table has been righted and the subtop attached, you can put the phenolic top in place. Secure it from below with drywall screws. That way, its smooth surface is unbroken except for the miter slots, which provide clearance for gauges and sleds.

Make way for the miter gauge. Put the outfeed table in place—leveled and adjusted to the right height—and use the saw's miter gauge to locate the clearance slots.

Rout the clearance slots

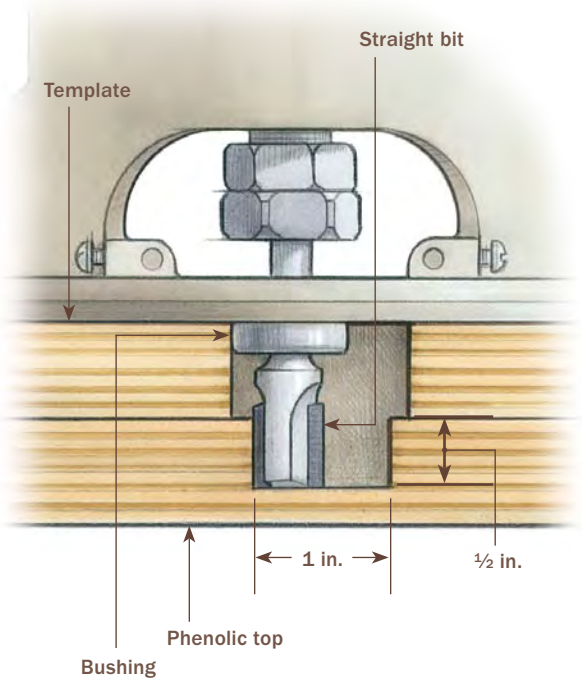

Jig makes quick work of wide slots. White used a router equipped with a guide bushing and straight bit to cut the clearance slots. His method produces a wide, accurate slot without having to move a straightedge for multiple passes.

the drawer and shelf dividers because they need to be the same height.

Begin by assembling the end panels and the center panel (see top left photo on p. 131). Once they're joined and square to one another, get the dimensions for the bottom and subtop by measuring the assembly and adding ¾ in. to its width and length. The bottom and subtop overhang the core assembly by ⅜ in. on all four sides, which makes it easier to fit them because the alignment of the edges won't need to be exact. Attach the bottom, but not the subtop.

The drawer and shelf dividers are next. The shelf divider is simply screwed to the center panel. The back of the drawer divider, however, has a strip of plywood attached to it. Screws are then driven through the resulting flange to attach the drawer divider to the center panel (see detail on p. 127). This is necessary because once the shelf divider is installed, you won't be able to drill through the center panel to attach the drawer divider.

After the dividers are in place, install the large shelf that provides storage for the sled. When you screw it down, keep the drawer and shelf dividers square to the center panel. Next, add the divider that serves as a back to the shelf.

You're now ready to attach the subtop, which adds stiffness to the phenolic top and makes it easier to screw it on. Before you attach it, drill and countersink a series of holes for the screws that will attach the phenolic top to the base. Drill them 6 in. apart around the subtop's perimeter and about 2 in. from the edge. Do the same around the center. Now, attach the small shelf on the side of the table. To keep things simple, I screwed the shelf to a pair of cleats, which are hidden by a skirt on the front edge.

Flip over the base and attach the two runners that receive the table's lag-bolt feet. These runners are made from Douglas-fir 4x4s trimmed to 2½ in. square. Drill pilot holes for the lag-bolt feet and screw them in, leaving them about 1 in. proud of the runners. The lag bolts allow you to adjust the table's height and to level it. Attach them 2¼ in. from the edge of the bottom.

Flip the base back over and attach the phenolic top (see top left photo on facing page). In addition to beveling the edges of the panel, I trimmed the two corners opposite the saw at 45°, which is easier to do with the top attached.

Next, level the cabinet and bring the top in line with the saw's table. Then transfer the location of the miter slots directly from the saw table and mark them out on the top. Mine are ½ in. deep by 1 in. wide by 20⅝ in. long. To cut the channels, you only need a router, a straight bit, and a straightedge, but I made

Simple joinery, sturdy drawers

Build the whole drawer box with just two tablesaw setups, one for the grooves and one for the rabbets.

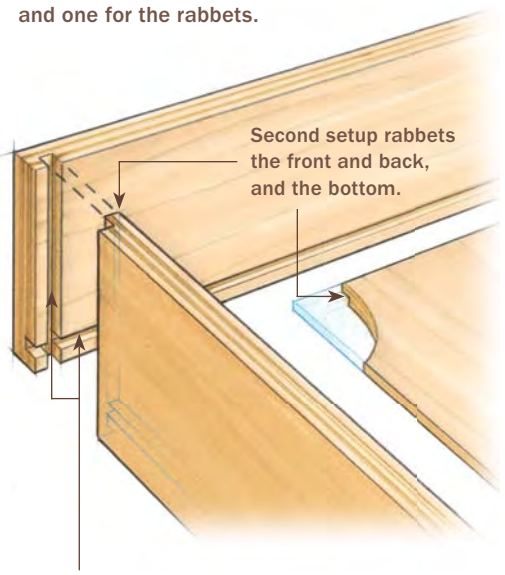

First setup cuts dadoes for the front and back, and grooves for the bottom panel.

1. Dadoes and grooves

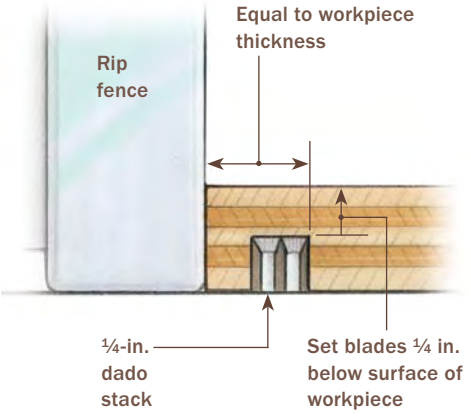

Dadoes in the sides. Use a miter gauge to guide the drawer sides safely along the rip fence.

Grooves for the bottoms. Run the bottom of the sides, fronts, and backs against the fence to cut the groove for the bottom panel.

2. Rabbets

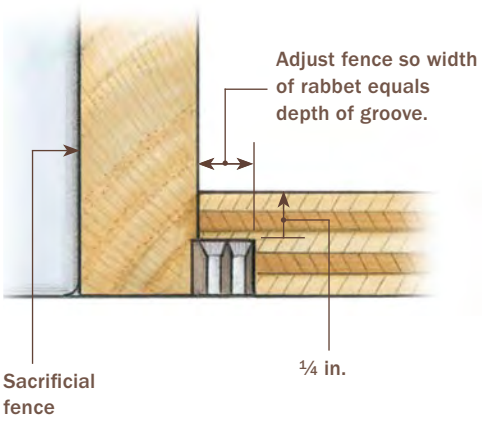

Rabbet the fronts and backs. With the dado head buried in a sacrificial fence, cut the rabbets for the corner joints.

Rabbet the bottom panels. All four sides of the bottom panels are rabbeted to fit into the grooves running around the bottom of the drawer box.

Assembly is easy. Go easy on the glue to avoid squeeze-out. Use brads to hold things snug as the glue dries.

Check for a consistent gap. The outfeed table should be a hair below the saw table. Hold a straightedge firmly down on the tablesaw to check.

a template and used an offset guide bushing, which allowed me to rout the entire channel without having to adjust a straightedge to get the full width (see drawing on p. 132).

For dust clearance, I drilled a ¾-in.-dia. hole about 6 in. from the end of each channel. The dust falls into the gap between the back of the saw and the outfeed table.

A fast drawer joint that lasts

You can build the drawer boxes in a variety of ways, but I recommend a rabbet-and-groove joint that requires only two setups on the tablesaw (see drawing on p. 133). These drawers are quite strong and can be made in short order.

The drawer boxes are made from Baltic-birch plywood that's just a hair under ½ in. thick, but that doesn't mean the joint is harder to cut. You'll cut all of the dadoes and grooves with the first setup and all of the rabbets with the second (see photos on facing page). The dadoes, grooves, and rabbets are cut with a ¼-in. dado stack set at the same height, so you'll only need to reset the fence between setups.

The easiest way to assemble the drawers is to brush a small amount of glue on the rabbets (you want to avoid squeeze-out) and tack the joints together with two or three small brads. The brads will hold the joint snug as the glue dries. Clamping is time-consuming,

Quick adjustments. The coarse thread of the lag-bolt test makes for speedy height adjustments.

Add a kick plate. Phenolic kick plates and drawer fronts are durable, but also give the cabinet a unified look and subtle pop. The plate hides the feet and stops things from rolling under the cabinet. It's easy to remove to make height adjustments.

Install the false fronts. Use shims and double-faced tape to position each drawer front, and then screw it on from the inside.

and the weight and pressure of the clamps can throw the drawer out of square.

I used standard ball-bearing, full-extension slides from a home center to mount the drawers in the outfeed table.

Attach the drawer fronts and kick plate

Fit the fronts with the table in place and adjusted for height and level. The table might twist a bit as a result of the adjustments, and you'll get a better fit after them.

The four pieces of the kick plate are screwed to one another at the corners but aren't attached to the cabinet. This makes them easy to remove should you need to tweak the table's height if you move the saw and table.

A few coats of shellac on the Baltic-birch plywood will give it some protection.

Your newly minted outfeed table will make your shop safer and better organized. And that will make your woodworking more enjoyable.

Pivoting Plywood Cart

MICHAEL PURYEAR

I build a variety of furniture using solid wood, veneer, and plywood, and since I work in a one-man shop, I constantly look for ways to make the experience as easy and efficient as possible. One of these ways is my panel cart. With this cart, I can stop struggling with 4x8 sheet goods such as medium-density fiberboard (MDF) and plywood, and easily move them about the shop. And because I built the cart to the height of my tablesaw, I can tilt the sheets horizontally to feed them directly from the cart onto the tablesaw.

Large swivel casters, a brake, and a steering handle make for easy maneuvering. A simple design and very basic joinery, tied together with bolts, make this a project that easily can be built in a day, so you can get right back to making furniture. Next to its usefulness, the best thing about this cart is that the materials are relatively inexpensive. Because you can use dimensioned construction lumber and/or scraps you have kicking around the shop, the cost is limited and mostly for the hardware.

Using the cart

I load 4x8 sheets on the panel carrier side and rough lumber on the other. I can then move the cart around the shop wherever it is needed, and it doesn't disturb the lumber when I tilt the sheet goods to the horizontal position. The four swivel casters allow me to push the cart in any direction without having to turn it around, and the handle lets me tow the loaded cart.

The cart lets me store, move, and rip up to eight 4x8 sheets. With multiple sheets stacked on the cart, the top sheet will be higher than your tablesaw when you tilt the sheets up into position. But you can still slide it onto the saw table and cut it safely. When you lift the pivoting frame, two latches lock it into position.

Move and cut large panels with ease

Roll. Large wheels and a pull handle help you tow a heavy load. Note that the back side can hold a pile of rough lumber. A foot brake locks the cart in place.

Pivot. Tip the support frame that holds the sheet goods into the horizontal position, where it locks automatically. Then move the cart into position and apply the brake.

Push. The cart supports the back end of the plywood, freeing you up to feed the material and apply pressure against the fence.

Silent partner

Build this simple cart in a day, then use it to store sheet goods on the panel support and lumber on the deck. Fully loaded in the vertical position, you can pull it around the shop on its large casters. Pivot the panel support frame into the horizontal position in front of your tablesaw and use it as an infeed table. It's almost as though you have another person in the shop lending a hand.

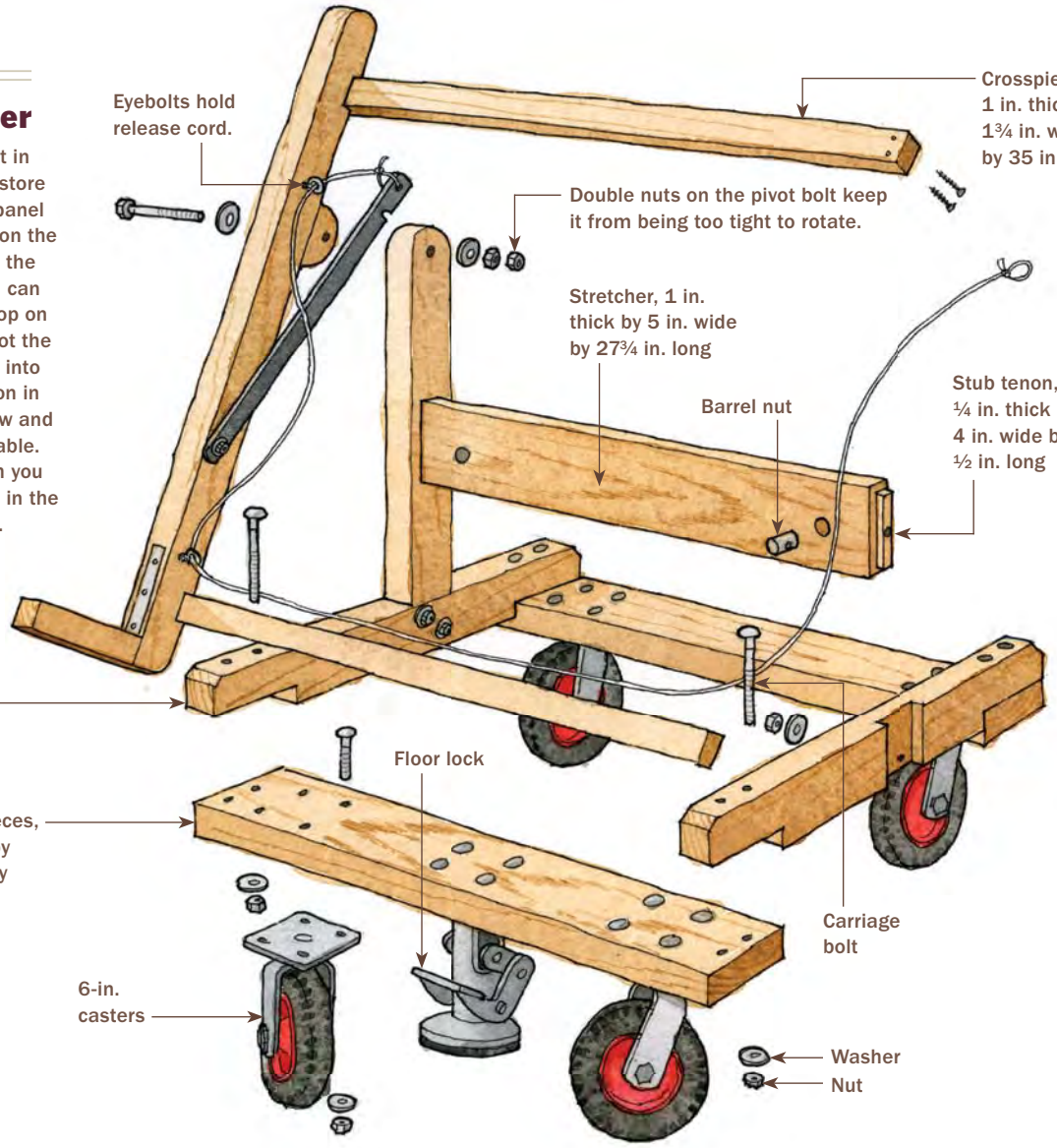

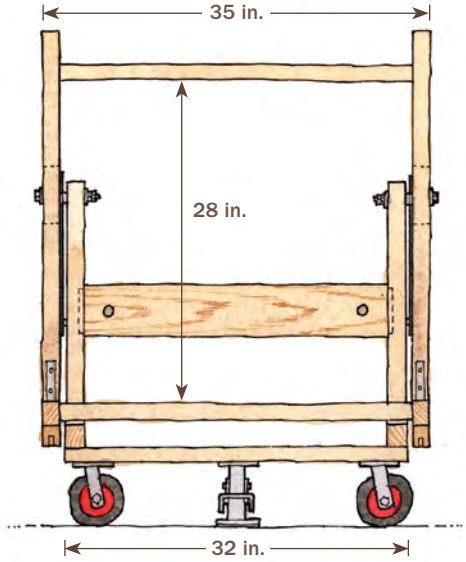

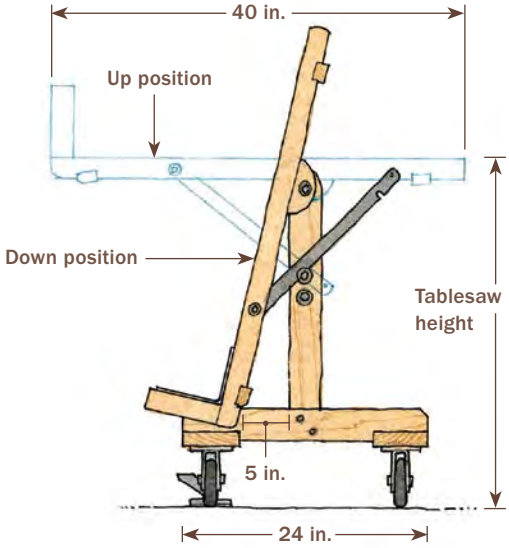

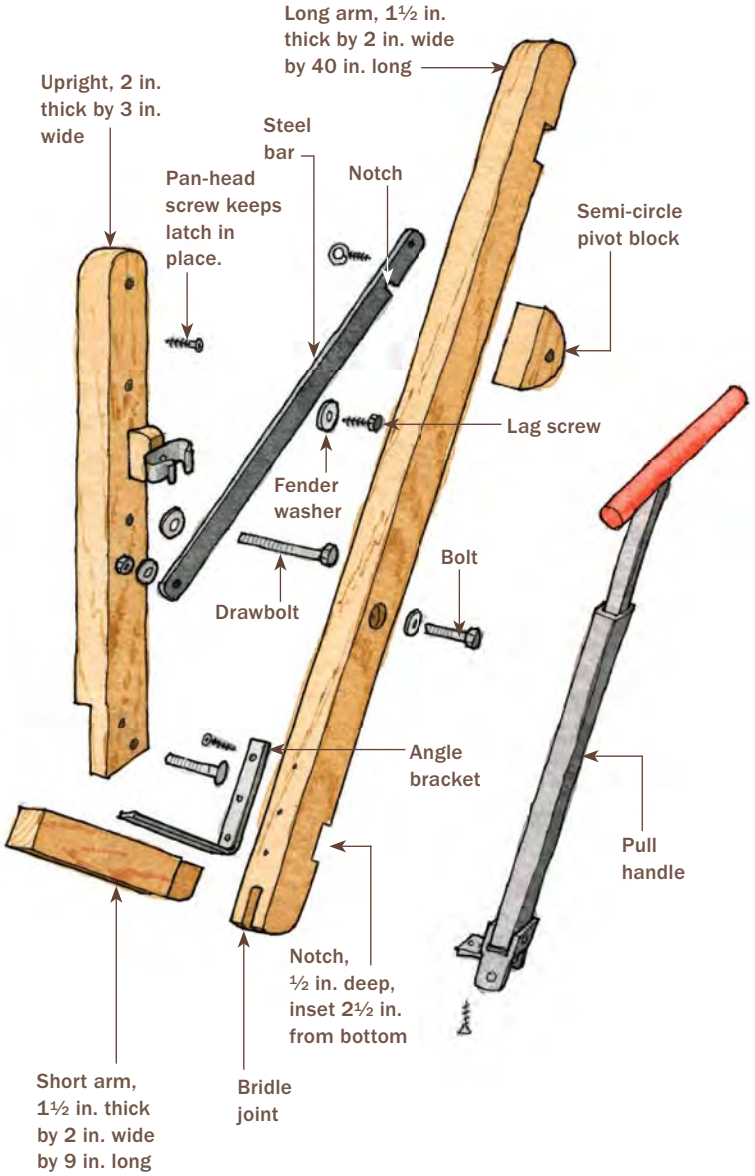

Set the pivot height

The frame's height is important. It can be a little higher than the tablesaw height, but not lower.

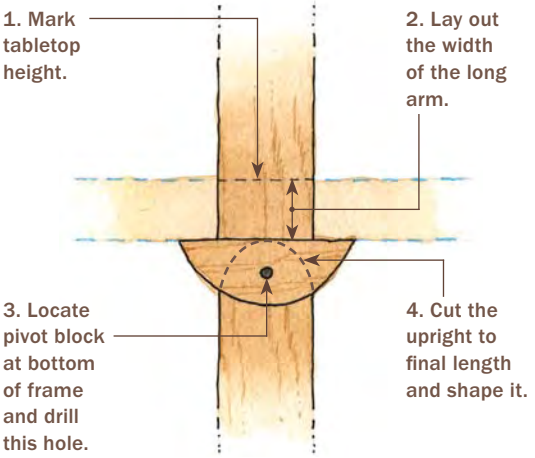

Take time to get it right. Once the base frame is built, add the casters and clamp an upright to the base. Adjust a marking tool to the tablesaw table. Puryear uses an Accuscribe from FastCap®, and then he transfers that mark to the upright.

Assemble the base. Connect the four base pieces, attach the casters, and add the stretcher and two uprights.

To lower the pivoting frame, you pull a cord to release the latches and lower the structure. What a pleasure not having to wrestle sheet goods onto the tablesaw when working alone.

A very basic base with casters

The base construction is simple. Except for the mortises in the uprights, I cut all of the joinery on the tablesaw. To line up everything perfectly, cut both crosspieces at once, clamping them together and using a miter

Locate the panel support. After making the two L-shaped pieces and notching them for the crosspieces, but before gluing in the crosspieces, you need to locate the Ls on the uprights. To do this, bolt a semicircle pivot block to its upright, and clamp one of the Ls to the base (top) so its lower crosspiece will hit the base about 5 in. from the upright. Mark the block's location on the L.

Glue on the pivot block. With the pivot blocks marked for position, glue and clamp one to each L. Now you can glue in the crosspieces to complete the panel support frame.

gauge and dado blades with multiple passes. The uprights that hold the tilting panel support frame determine the final height of the cart in its horizontal position. Base their length on your caster height and the height of your tablesaw. Right now, cut them longer than you will need until you settle on a final height (a little later in the process).

The bottom end of each upright gets a half-lap that corresponds with the half-lap in the base of the crosspieces. Each upright also gets a centered mortise (cut with an edge guide on a router) to hold the stub tenon of the stretcher. I reinforce this joint with a drawbolt. I clamp the stretcher to the uprights and drill through both for the drawbolt and barrel nut. Once this joinery is cut, bolt the casters and the crosspieces to the main base. Don't attach the uprights yet.

This is a good time to talk about the casters. The loaded cart can get heavy. I use four heavy-duty 6-in. swivel casters rated at 330 lb. each, which are not available with total locking brakes. In lieu of brakes, I added a floor lock. I prefer all four casters to swivel because it makes maneuvering around the shop easier. I wouldn't use casters smaller than 5 in., because small obstacles on the floor will stop them dead.

Tilting panel support affects the height of the uprights

To build the panel support frame, start by making the two L-shaped pieces. Cut the

Connect the panel support frame to the base. Nuts and bolts with washers on either side keep things together (above left). The notch in the latch rests on a lag screw between a washer and the upright (above right). An extra screw will act as a stop and keep the latch from jumping out of line. The washer guides the bar back in place.

notches for the crosspieces using a dado blade. The elbow is a bridle joint that I reinforced with angle brackets because they will carry all the weight of the 4x8 sheets.

To determine the height, clamp an upright to the base. Roll this assembly up to your tablesaw and mark the height of the table on the upright.

Then move to the bandsaw and cut two semicircular pivot blocks from 1½-in.-thick lumber and drill a hole centered between the corners and 1 in. from the flat side. Clamp each block to its upright with the flat side parallel to and 2 in. below the line marked as the tablesaw height. Center the hole in the block on the upright and drill through it into the upright. Repeat for the second upright.

Now the pivot blocks are located on the uprights so that they will hold the support frame level with the top of the tablesaw when the frame is tilted to the horizontal position.

Cut the uprights to length, radius their tops, and bolt each one to the base. Then round over the top and bottom of each L (for aesthetic purposes only). Once that's done, insert a bolt through one pivot block and into its upright. Rest one of the Ls on the block and adjust it so that the bottom of the lower crosspiece will land on the base 5 in. from the upright. Clamp the L to the base and then to the pivot block and mark the block's location on the L. Transfer the marks to the other L and glue the blocks in place.

Simple release. A cord that runs from the end of one latch around the frame through eyebolts and to the end of the second latch is pulled to lift the latches, releasing the panel frame so it can pivot into the vertical position.

Latch system holds panel support horizontally

For the latch system, I use two steel bars (available at most hardware stores). I drill holes on each end and use a hacksaw to turn one hole into a notch (I also drill a smaller hole for the release cord). One end gets screwed to the L of the support, and the notched end hooks over a lag screw in the upright. To mark the latch's bolt hole on the L, pivot the panel support horizontal and level and place the latch notch over the lag screw on the upright. Drill the bolt holes, then bolt the latches loosely in place so they move easily using locking nuts. Place pan-head screws on the uprights above each latch so that the latches can disengage but not rise above the fender washer. Leave ⅛ in. between the head and the upright.

Because I can't unhook both of those bars and hold the cart support while it's pivoting, I attached a cord that runs between the bars and allows me to unhook them at the same time. Finally, attach a pull handle to one end of the cart.

Sources

DRAWBOLTS AND BARREL NUTS
www.leevalley.com
(No. 05G07.01)

PULL HANDLE
www.harborfreight.com
(No. 94354)

FLOOR LOCK AND CASTERS
www.globalindustrial.com
(No. CJ241851, lock;
No. WB601122, casters);

www.harborfreight.com
(No. 41565, casters)

House Your Tools in High Style

CHRIS GOCHNOUR

A tool cabinet is a great shop helper. It keeps hand tools and small power tools well organized and off the bench but within reach. And perhaps more importantly it saves valuable floor space. But a tool cabinet doesn't have to have the cold feel and look of MDF or the piecemeal appearance of a cabinet made entirely from scraps. Rather, it can have the look of fine furniture, giving tools an attractive home and your shop an aesthetic boost.

I collaborated with the editors at *Fine Woodworking* to design a useful, attractive tool cabinet. It can be built with the most basic shop tools in a short amount of time, and it will beautify your shop as it has mine.

The carcase, made of ¾-in. walnut plywood, is built with simple dado joinery cut with a tablesaw. The six interior drawers employ a similar setup. The attractive doors couldn't be easier to make. They feature stub-tenon and groove joints for the frame, a veneered plywood panel glued in place, and divided glass panes that can be done in no time at all. Construction starts with the case.

A blend of sheet goods and solid wood

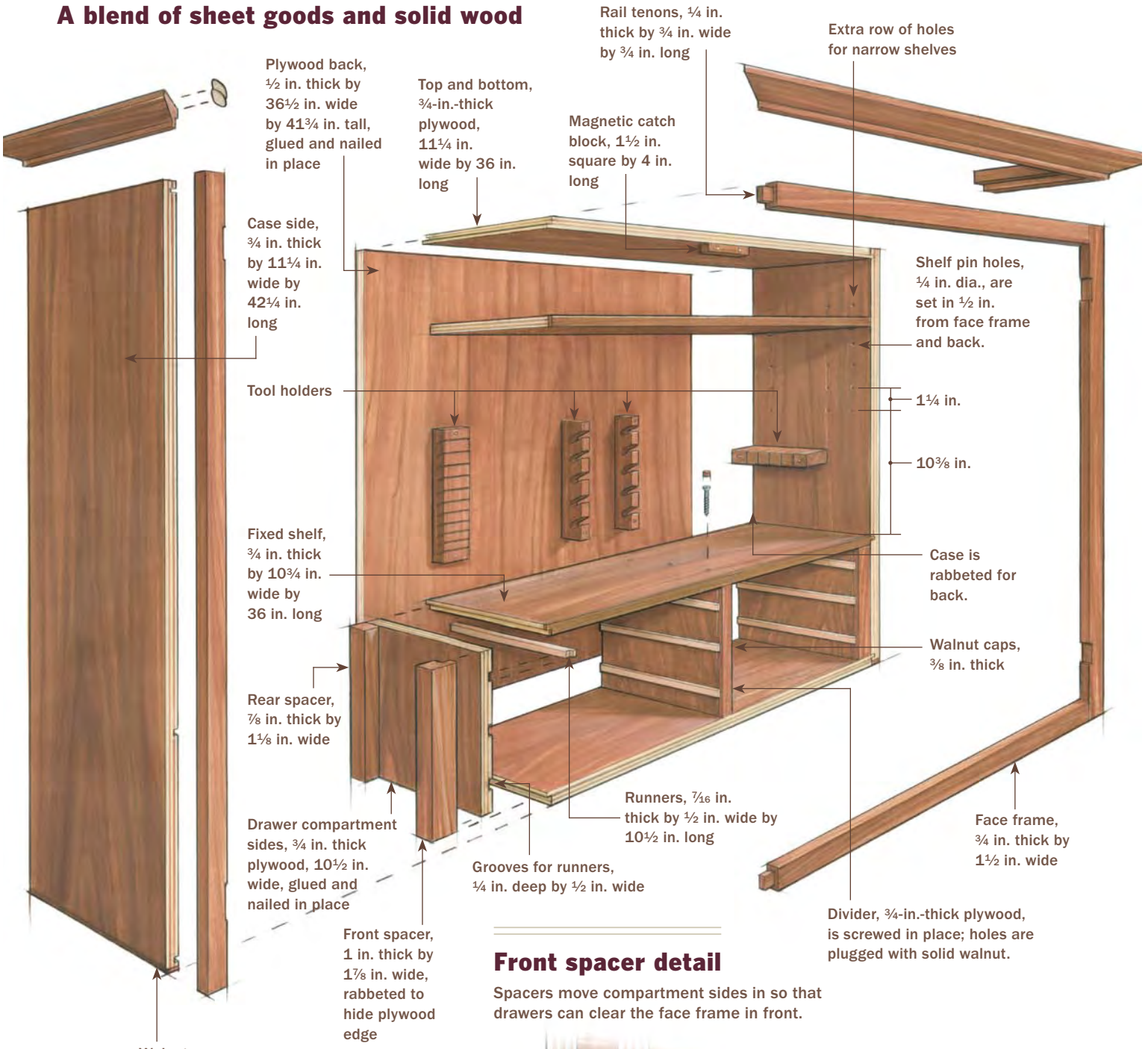

Front spacer detail

Spacers move compartment sides in so that drawers can clear the face frame in front.

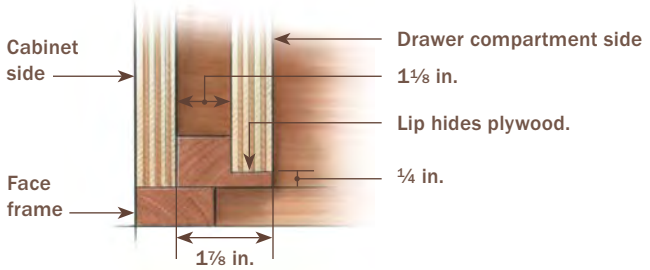

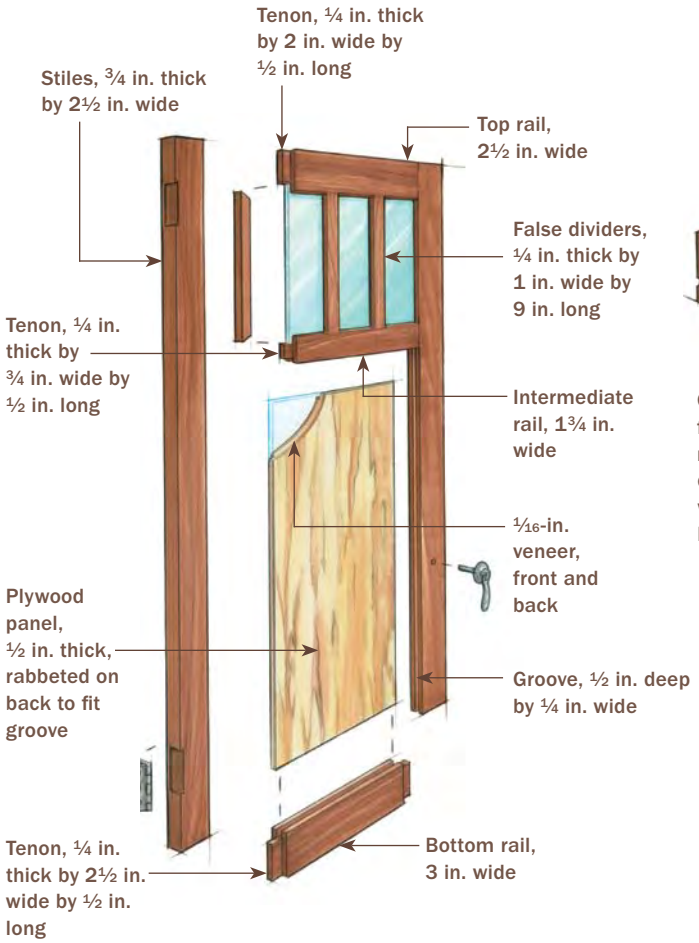

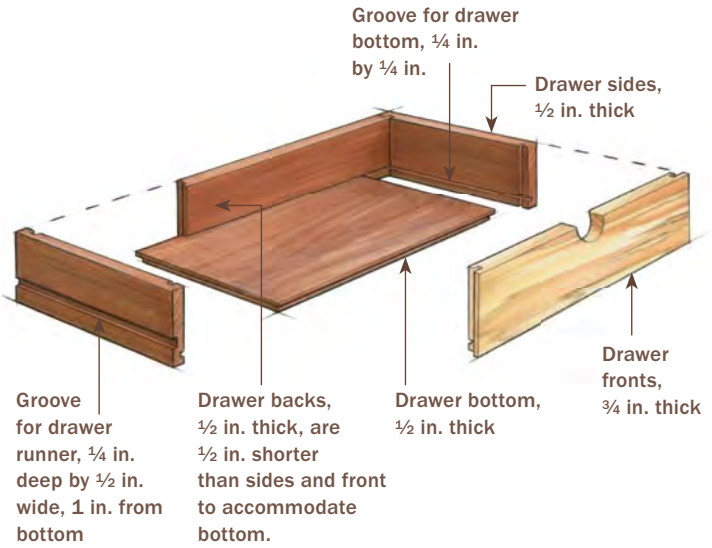

Case joinery detail

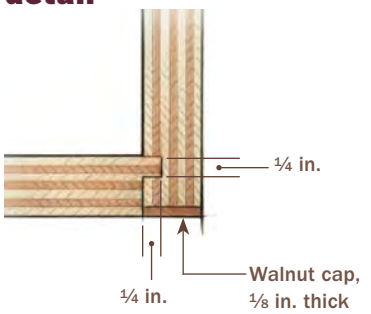

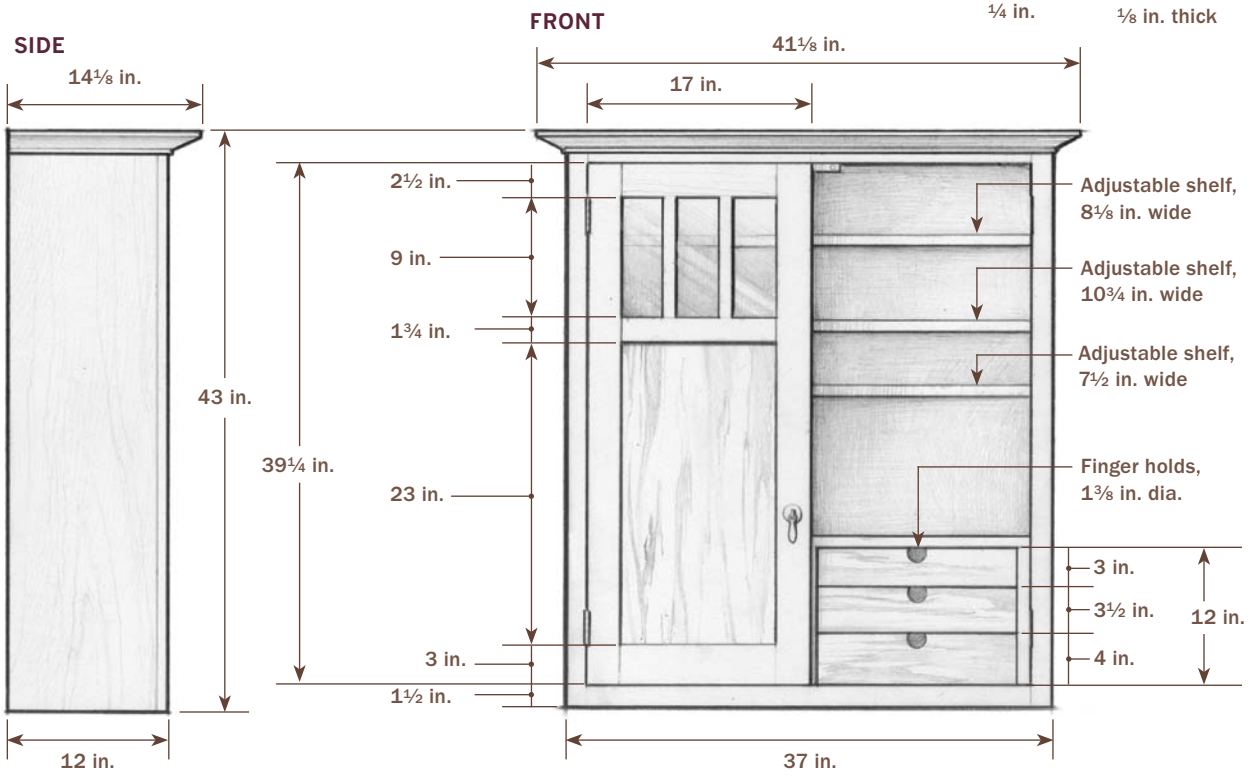

No help needed. The case is fairly large, but with carefully fitted joints, the glue-up shouldn't require more than two hands.

Case is a lesson in tablesaw joinery

All of the main components of the case (including the adjustable shelves) can be built from one sheet of ¾-in.-thick walnut plywood. The back is ½-in.-thick walnut plywood. Some suppliers may be reluctant to sell a partial sheet of hardwood plywood. If your supplier won't, and you don't think you'll use the cutoff in the future (or make two cabinets!), you can make a solid-wood back.

Begin with the case sides. Cut them to length but leave them ¼ in. extra-wide. Glue ⅛-in.-thick solid walnut caps to the bottom edges and trim them flush. After that, rip the sides to their final width. The fixed shelf also is edged with solid walnut that's trimmed flush prior to cutting the joinery.

The case dado joints are cut on the tablesaw with a ¼-in.-wide dado blade. Adjust the blade for a ¼-in.-deep cut and make the dadoes in the sides for the top, the bottom, and the fixed shelf. Then, without changing the height or width, cut the ¼-in. tongues on the top, the bottom, and the fixed shelf. Now cut the rabbets that will house the cabinet back. I do this on a router table using a straight bit and a fence to guide the cut. The rabbets on

Face frame is last. After gluing and nailing in the back, attach the face frame to the front (left). Trim it flush with a router (below) after the glue dries.

Build the drawer compartment. Install the spacers and compartment sides after cutting the dadoes for the drawer runners. The center divider is screwed in from above and below. Temporary plywood spacers on each side (top and bottom) keep the divider aligned vertically.

the case sides are stopped, while those on the top and bottom run all the way through.

With all the joints cut, you can dry-fit and then glue up the assembly. Gluing in the plywood back as you assemble the carcase will help keep things square. Reinforce the assembly with brad nails.

Crown molding in four cuts

The first cut is the deepest. Make the bevel cut first. Use a featherboard to keep the piece tight against the fence.

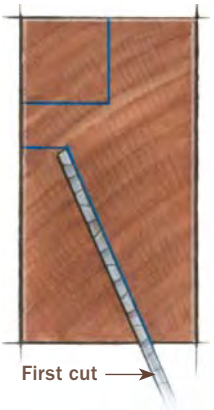

Lay it flat. The second cut starts the rabbet. The third cut (shown) frees the bevel waste.

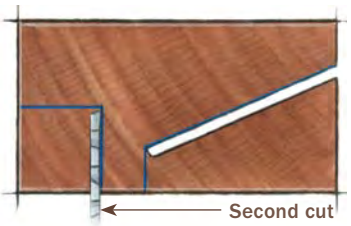

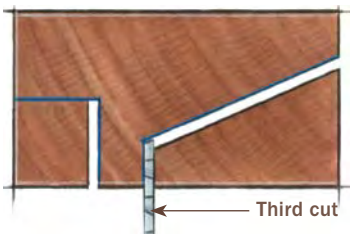

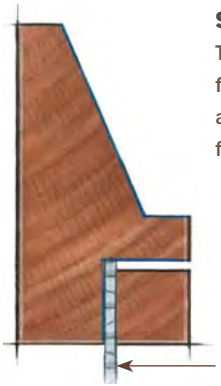

Stand it up. The fourth cut finishes the rabbet and lets the waste fall away safely.

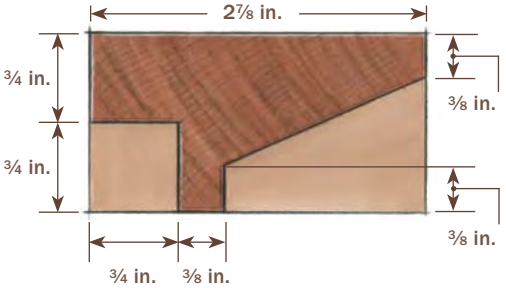

Face frame and crown are solid walnut

I make the face-frame parts a hair oversize in width so they overhang the case by about 1/32 in. all the way around. This makes it a bit easier to get the frame aligned and squared perfectly. The stiles and rails are joined using mortises and tenons. I remove the bulk of the mortise waste at the drill press and finish with chisels. The tenons are cut on the tablesaw using a dado blade.

Glue up the frame and then glue it to the case (see left photo on p. 151). Once the frame is aligned the way I want, I drive four brads, one in each corner, to ensure that the frame doesn't shift as I clamp it. After the glue has set, flush-trim the frame to the case.

The crown molding is very easy to make and apply. It is made using four different tablesaw setups (see "Crown Molding in Four Cuts" above). Make the profile and clean up the cuts with scrapers and sandpaper, then

Don't change the blade. Reset the height of the dado blade to cut the stub tenons. Dial in the tenon with a test piece, then crank out the tenons on all the parts.

Center the grooves. The door frames are grooved for the glass and the wooden panel. To make sure the groove is centered, cut it in two passes with a dado blade, flipping each workpiece end for end after the first pass.

Spacers help the glue-up. Because the glass is installed later, the intermediate rail is hard to align and keep square. Gochnour uses spacers to align the piece before clamping it (above). The panel is glued all around, adding strength to the door (right). To avoid squeeze-out, brush glue into the grooves but not on the panel.

cut the miters and fit the molding. I reinforce the miters with #10 biscuits, and then glue and nail the molding to the case. The adjustable shelves are plywood with solid walnut edging. I made two of the shelves shallower to make it easier to access tools without banging a shelf edge.

Scraper trick gets the reveal just right. Before tightening down the clamps, use a card scraper as a lever to adjust the reveal all around the rabbet on the back of the door panel.

Glass sits in a rabbet. With the door face-down, remove the wood behind the groove, using a bearing-guided rabbeting bit riding on the wood in front of the groove. Square up the corners.

Spacers again. The false dividers are cut for a tight fit and butt-joined to the frame. When gluing them in, use spacers to align them correctly.

Wood plugs add strength

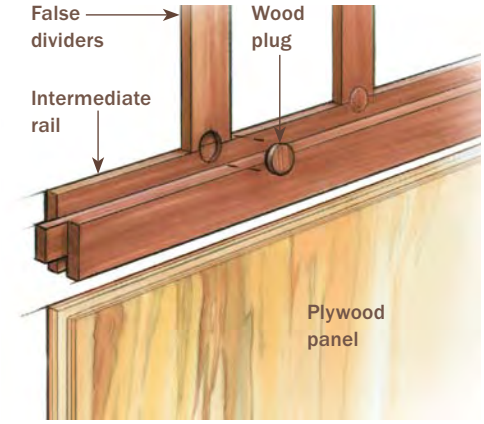

Holes for the plugs. Gochnour uses wood plugs to reinforce the small butt joints. Drill ⅛-in.-deep mortises for them using a ½-in.-dia. Forstner bit.

Dirt-simple glass doors

The frame-and-panel doors have three divided lights in the upper section, but their construction isn't complicated: It's all tongue-and-groove joinery, with the plywood panel glued in place for strength.

After milling the frame material, cut the panel grooves on all the inside door parts (see top left photo on p. 153). The grooves also receive the rail stub tenons, which are cut using a dado blade on the tablesaw.

The ½-in.-thick plywood panel on my cabinet doors is covered with spalted sycamore veneer. But you can substitute a nice hardwood plywood. Cut the panel to size and rabbet the back on the tablesaw to form a tongue that is captured by the groove of the door frame. Once all the parts are cut and fitted, glue up the doors.

The glass in the top of each door is an eye-catching detail, and my method of installing the single pane of glass is easy. First, rout a rabbet for the glass using a bearing-guided rabbeting bit (see top left photo above)and square the corners using a chisel. The false dividers are butt-joined to the frame rails.

Cut and release. Use a plug-cutter to make a row of ½-in.-dia. plugs in a walnut blank and then rip off a thin strip on the bandsaw to free them.

Glue them in. Align the plug's grain with that on the dividers, and trim the plugs flush after the glue dries. The frame is attached with brads.

Add the glass after finishing. It is held in place with a small bead of adhesive caulk below the glass and a thin mitered frame (left) attached with brads. Drill pilot holes for the brads, and use a sheet of thin cardboard to protect the glass as you drive them home (above).

More tablesaw joinery. After cutting the grooves for the side runners, cut the narrow dadoes for all of the drawer backs. Keep the blade at the same height but adjust the fence to cut the dadoes for all of the drawer fronts.

Hold it steady. The tongues on the drawer backs are cut flat on the saw table with a dado blade. To cut the tongue and rabbet joint in front, hold the workpiece upright as shown, using a featherboard and tall fence to keep the piece from tipping.

Simple drawer joinery

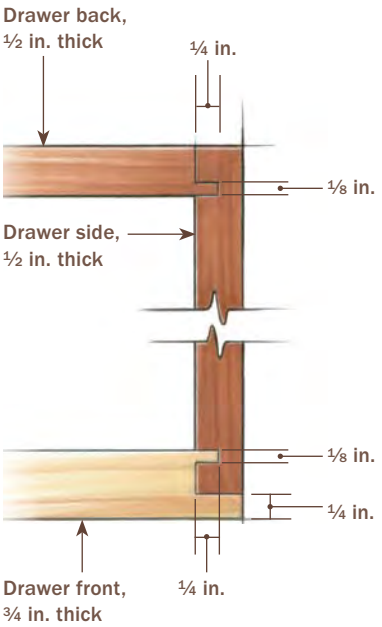

Bite the tongue. After dialing in the setting, trim the tongues on all the drawer fronts.

Cut them to width, and then carefully fit them lengthwise. The butt joint is reinforced from behind with a ½-in.-dia. long-grain plug.

The opaque glass I use is called "domestic seedy," purchased from a local glass dealer. It is held in place with adhesive caulk and a thin mitered frame.

Drawers are quick to make

The six drawers in the cabinet are side hung and require a couple of extra vertical panels on both sides of the drawer compartment. Those pieces, ¾-in.-thick plywood, are blocked out from the case sides so the drawers clear the face frame.

Cut the side panels and the center divider to size at the same time, and then cut the dadoes for the drawer runners. Now add the solid-wood edging to the center divider and trim it flush.

Now you're ready to assemble the drawer compartment. Cut and fit the spacers and glue and nail the pieces to the sides. Next, glue and nail the compartment sides to the spacers. Finally, screw the center divider in place from above and below. The screw holes are countersunk and plugged.

Once the internal case is assembled, make the maple drawer runners and fit them in their dadoes. The runners have some front-to-back play and, when dry-fitted, can slide back and forth. They butt against the back of the drawer fronts and, when glued in place, also serve as the drawer stops.

The drawers use simple dado joinery at the back and front. I made the drawer bottoms from ½-in.-thick solid alder, but you could substitute plywood there. The bottom is screwed into the drawer back, with a slot in the bottom to allow for movement.

The drawer pulls need to be flush because of the close proximity of the drawer fronts to the doors. I use a simple 1⅜-in.-dia. hole drilled into the edge of the drawer front using a Forstner bit.

Once the drawers are complete, make the tool holders and finish the piece (I used a sprayed lacquer). To hang the cabinet, simply screw right through the back, being sure you hit the wall studs. Now if only I could find the time to put away all my tools . . . .

No fitting required. The runners have enough play front to back to allow you to adjust the drawers perfectly flush in front. Glue in the runners (top) one pair at a time. Then, before the glue dries, install the drawer and tap it so that the front is perfectly flush (above). Leave it that way until the glue dries.


Fine WoodWorking
No 608
No 606
No 5

Keep Planes Close at Hand

CHRIS GOCHNOUR

Let's face it. Handplanes are expensive, costing as much as or more than a benchtop power tool. To keep these investments safe, many woodworkers tuck their planes inside drawers or cabinets. Though the tools are safe and sound, it's a nuisance to keep opening a door or drawer to access the planes when they're needed. For convenience, many folks end up keeping their most-used planes on top of the bench.

That method is not so convenient, however, because the planes can get in the way, and they're just inches from getting knocked to the floor accidentally. My plane rack solves all of those problems.

Though simple in design, the rack has a unique way of holding the planes. The knobs are suspended from loops made from bootlaces, and the soles rest on an angled panel. The system is strong and stable, and the bootlace hangers allow me to grab and store planes with ease.

This rack holds what I consider to be a full set of handplanes—a jointer, fore, jack, two smoothers (Nos. 4 and 4½), and three block planes—with room below for some specialty planes, such as a shoulder plane. But the rack can be modified to fit more or fewer planes or planes of different sizes.

Easy access. Planes go in and out in seconds with this easy-to-make rack.

Bootlaces are the secret

Planes rest on the angled back panel and are held in place with sturdy bootlace loops. The rack hangs on a hidden French cleat, screwed into studs.

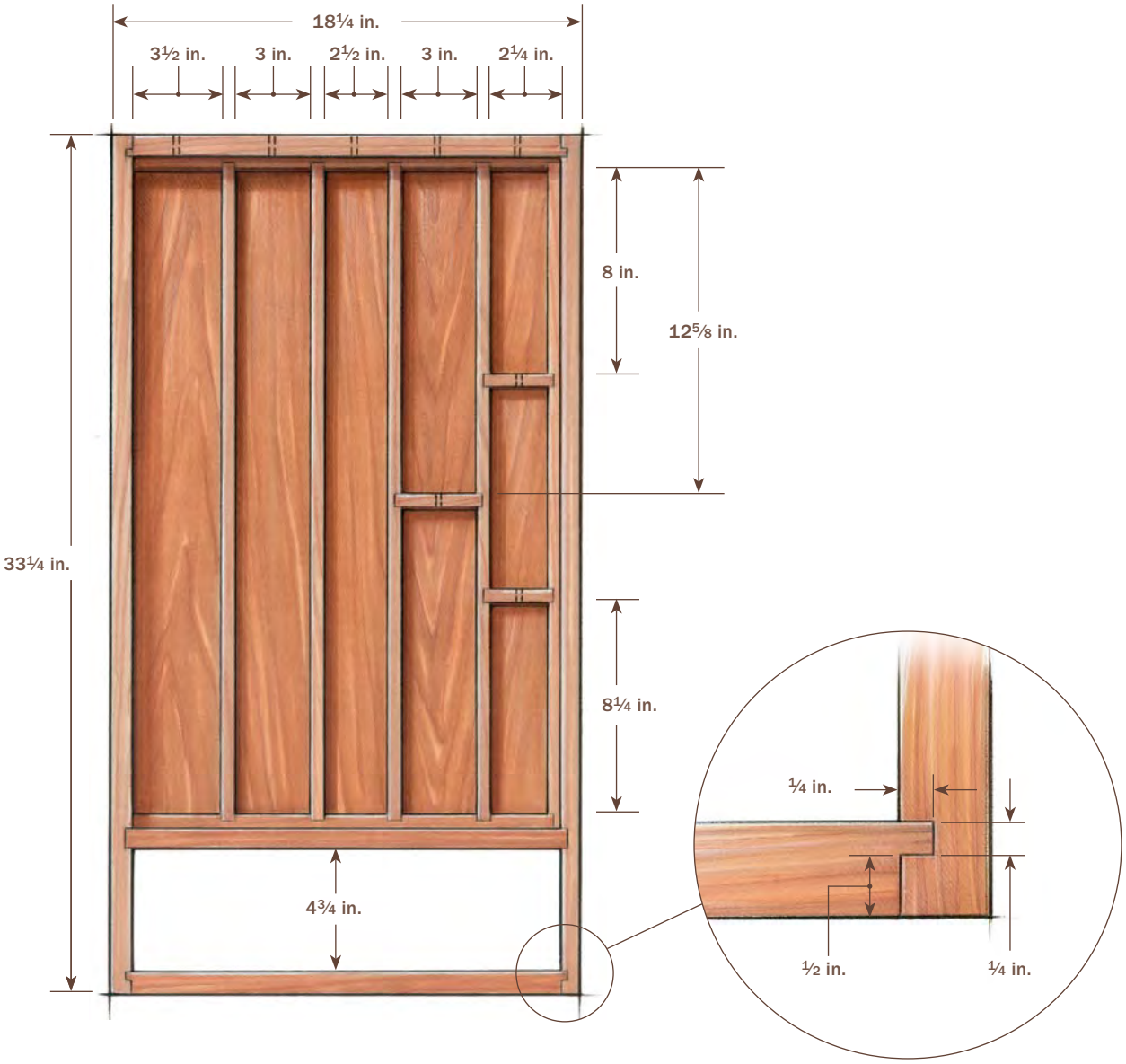

Joinery is straightforward

The case is assembled with simple dadoes and rabbeted dadoes. After cutting these joints, you can take on the trickiest part of the assembly: cutting the grooves for the angled back panel. Start by making the grooves in the underside of the top and in the top of the horizontal divider. These through-grooves are cut on the tablesaw using a dado set tilted to the panel angle (5°). Then, dry-assemble the case. Place a spacer, the same thickness as the back panel and about 1 in. wide by 3 in. long, into the grooves in the top and divider. Knife around the spacer to locate the grooves in the sides.

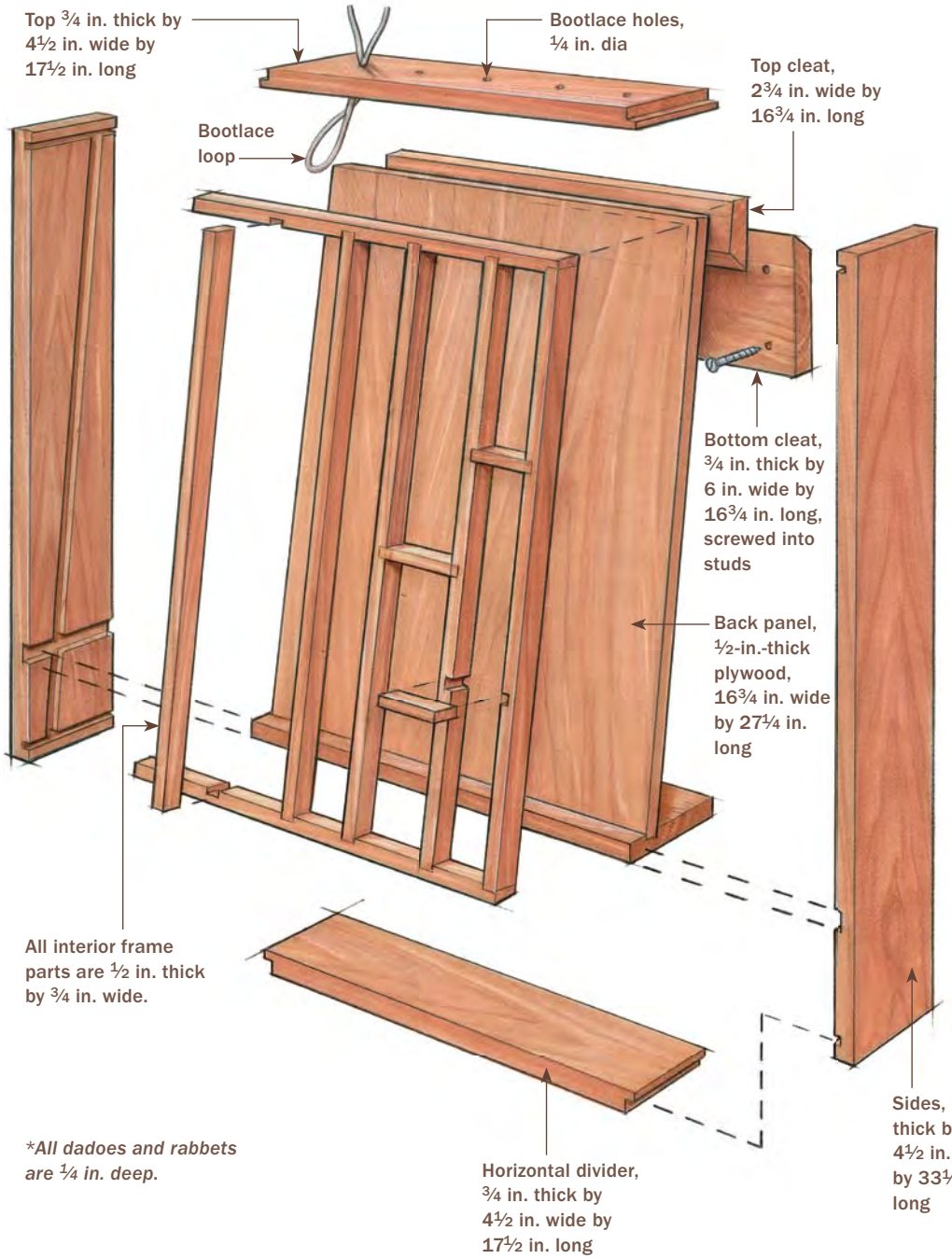

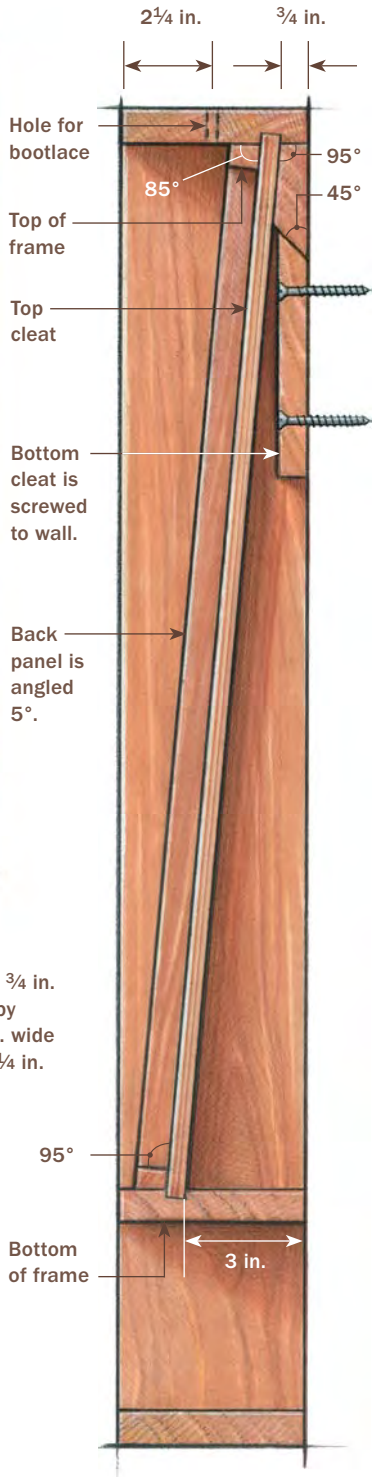

SIDE-VIEW DETAIL

Clamp the sides together and to the benchtop and clamp a long plywood fence to one side, aligned with the groove marks. Rout the groove using a plunge router and a ½-in.-dia. pattern bit. Rout the groove in the other side piece in the same way. With all the grooves made, cut and fit the plywood back panel and glue up the case. Then make and fit

Angled cuts made easy

Cut the top and bottom grooves for the back panel with a tilted dado blade. Then use a plunge router and angled fence to make the grooves in the sides.

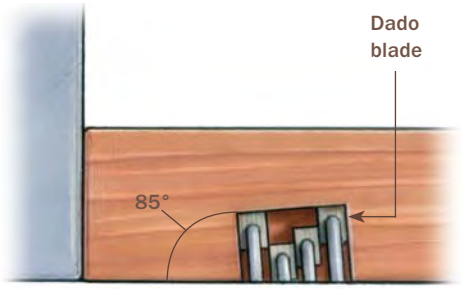

Tilt a dado. Cut the grooves in the top and the horizontal divider at 5°.

Layout blocks ensure that all the grooves meet. With the case dry-assembled, use offcuts from the back-panel stock to lay out the side grooves. Place these blocks in the top and bottom grooves and scribe around them with a knife.

Rout the sloping side grooves. Clamp a fence aligned with the scribe marks, and use a plunge router and ½-in. pattern bit.

the French cleat. Note how it is angled to sit flat against the back panel.

Cut and fit the interior frame

Start by making the top and bottom pieces of the frame. Cut them to length, then bevel one edge 5° so that the inward facing edge is at a right angle to the back panel (see drawing on p. 161). That means you bevel the top edge of the top piece and the bottom edge of the bottom piece.

Build the box first. The plywood back panel is glued into its grooves, making the cabinet rigid.

Glue in the interior frame. Install the top and bottom frame pieces first, then attach the vertical pieces. You can glue them to the back panel without clamps, but the joinery must be tight. Drill the bootlace holes in the short horizontal pieces before gluing them in.

Next, cut the dadoes for the vertical frame pieces in the top and bottom of the frame. Fit the vertical pieces, then cut the dadoes in them for the short horizontal frame pieces. After cutting and fitting the shorter pieces, drill ¼-in.-dia. holes in them for the lower bootlace hooks. Now glue the interior frame into the case. These tight-fitting parts require only spring clamps to hold them while the glue cures. After the interior frame has been installed, drill holes through the top of the case for the top bootlace hooks. Clamp a backer board to the opposite side to prevent tearout.

Finish the rack and tie up loose ends

I finished the rack with three coats of WATCO Danish Oil, which brings out the beauty of the wood, protects it from grime, and touches up easily if needed. Once the finish is dry, make the bootlace hooks. It will take some tries to get the right-length loop for each compartment. Don't get frustrated. As long as you can hook the knob of the plane through the loop and the plane sits in its compartment, you're good to go. Singe the ends of the loops to prevent fraying.

It won't take long to get the hang of this rack. Soon you'll be removing and replacing the planes with just one hand.

Holes for the hooks. Once the case is glued up, drill holes through the top piece for the bootlace hooks. Clamp a backer board underneath to prevent tearout.

Custom hooks. Make a loop using a overhand knot (top) and thread it through its hole (above). Experiment to get the right-length loop for each plane.

BEFORE

AFTER

Divide and Conquer

MICHAEL PEKOVICH

The set of drawers in my workbench holds the tools I use most often, but until recently it didn't hold them very well.

I've always liked having the tools within reach, but I wasn't fond of the way they rattled and rolled around, threatening to damage one another. And I didn't enjoy having to rummage through a dusty jumble of stuff to find the tool I wanted.

I finally got tired of it and installed dividers. They are easy to cut and install, and they're adjustable. I didn't want to be locked into a layout that I might outgrow, so I used dividers that are dry-fit into dadoed end pieces. They fit securely, but can easily be removed and relocated as needed. Now, all my tools rest easy—and in plain sight. No more rattling, rolling, or rummaging.

Dado blade is the key to quick joinery

Use a dado set to make ¼-in.-wide test cuts in a scrap of wood. After thicknessing, rip all of your stock to fit the dadoes in the scrap piece. As one dado gets worn, move on to a fresh one. Leave the pieces long at this point.

For layout, simply arrange the tools in the drawer the way you want them. Then fit crosspieces to the drawer and mark them for

Get your stock ready. Use a dado set to make ¼-in.-wide test cuts in a piece of scrap. After thicknessing, rip all of your stock (top) to fit the dadoes in the scrap piece (above).

Dado both ends at the same time. To ensure that the carving-gouge dividers would line up, Pekovich dadoed both crosspieces together.

Don't bother with a drawing. Arrange the tools in the drawer the way you want them (top). Then fit crosspieces to the drawer and mark them for the dadoes (above).

the dadoes. For the carving-gouge dividers, I dadoed both crosspieces together to ensure that they would line up.

A layer of rubber mesh drawer liner cushions the tools and helps keep them from sliding. After marking and cutting the pieces to length, profile the dividers as needed for easy access to the tools and slide them into place.

Finishing touches. After marking and cutting the pieces to length (left), profile the dividers as needed and slide them into place (below).

Fire Safety in the Shop

BRUCE RYDEN

No matter the size of your shop, fire hazards are present day in and day out. Wood is a combustible material, but when it's in the form of a solid mass, such as a plank of lumber, it is difficult to ignite and to keep burning. Try holding a match to a large piece of wood and see which gets burned first, the wood or your fingers. If you took that same piece of wood, put it through a thickness planer, and held a match to the pile of shavings, you'd be amazed by how quickly it would ignite.

The best way to prevent a fire in your shop is to practice good housekeeping. Sawdust and wood shavings are the two most commonly dangerous products in a woodshop. They are ignited easily, and the fire can spread with unbelievable speed and intensity. The careless use, storage, and disposal of finishing supplies also are frequently encountered fire hazards. Many woodworkers store cans of varnish, containers of solvents and thinners, and organic-based finishes, such as linseed oil and tung oil, on open shelves in the shop, where they can provide the fuel to greatly accelerate the spread of a fire.

Prevention is mostly common sense

Three elements are required to cause a fire: fuel, oxygen, and a source of heat. Take away any one of them, and you cannot have combustion.

We need the oxygen to breathe, so we can't remove that. We often can remove the heat to prevent a fire (by not smoking or not using torches or welding equipment in a woodshop). But the easiest item to remove is the fuel. It may seem like a real chore to sweep up a pile of wood chips or shavings after a long day working in the shop, but by cleaning up, you can remove the most manageable portion of the three elements needed to start a fire.

Electricity, another hazard in most shops, often is blamed as the cause of a fire, but seldom is that borne out by a competent fire investigation. In a clean shop, this heat source rarely is the cause of a fire. If an electrical short circuit does occur, it must have a fuel to feed upon. Without contact with piles of sawdust or wood shavings, the likelihood of a short circuit starting a shop fire is

It could have been worse. Ellis Walentine, host of www.woodcentral.com, lost his entire shop in rural Pennsylvania in May 1999 to a fire; no one was hurt in the conflagration. He suspects the fire was caused when arcing in a loose connection in the electrical panel ignited some accumulated sawdust.

Store flammable liquids. A storage cabinet for flammable liquids is meant to keep a fire from getting much worse very quickly. Whether you buy one or build your own (on the facing page), it should have a self-closing door and a lip on the shelves to keep spilled liquids from escaping.

Dispose of oily rags. Rags soaked with flammable finishes can ignite spontaneously, so they must be disposed of properly. With its spring-loaded, self-closing lid, this red bucket prevents spontaneous combustion. A plastic bucket half-filled with water also will work.

improbable (but possible—see p. 175). Any tool or piece of machinery that has a cord that is frayed, cracked, or not in great condition should be replaced, and all electrical connections should be secured tightly.

One of the frequently forgotten and least understood causes of fire in the shop is spontaneous combustion of rags and waste. When an organic oil, such as linseed oil or tung oil, is applied to rags used for finishing, a heating process takes place. This heating takes place only in the presence of oxygen, and when the heat given off by the process is not allowed to dissipate, it will continue to rise until the rags reach a temperature that is high enough to ignite them.

By placing used rags in a steel container with water and a cover on it, this process will not occur. An acceptable alternative is to hang the rags in a single layer on a clothesline or a fence, which allows the rags to dry without the heat buildup.

The application of a flammable finish by hand is not without hazards, but if there is good air exchange with fresh outside air, the vapors given off by the finish can be diluted to a safe level. Most of these vapors are heavier than air and will sink to the floor. Be especially careful about any possible source of ignition (such as water heaters, furnaces, portable heaters, and electric fans) down near the floor close to where you are working.

The proper storage of flammable and combustible materials used in finishing projects is one of the most neglected safety issues in many workshops. Cans and sometimes even glass bottles stored on open shelves can fall off and release large quantities of hazardous materials. Spray cans containing any flammable or combustible materials are extremely dangerous items to have sitting

Construction detail

The 2x4 frame serves as a spill-proof lip on the front of the shelf. The two layers of drywall greatly increase the time that it would take a fire to ignite the liquids in the cabinet.

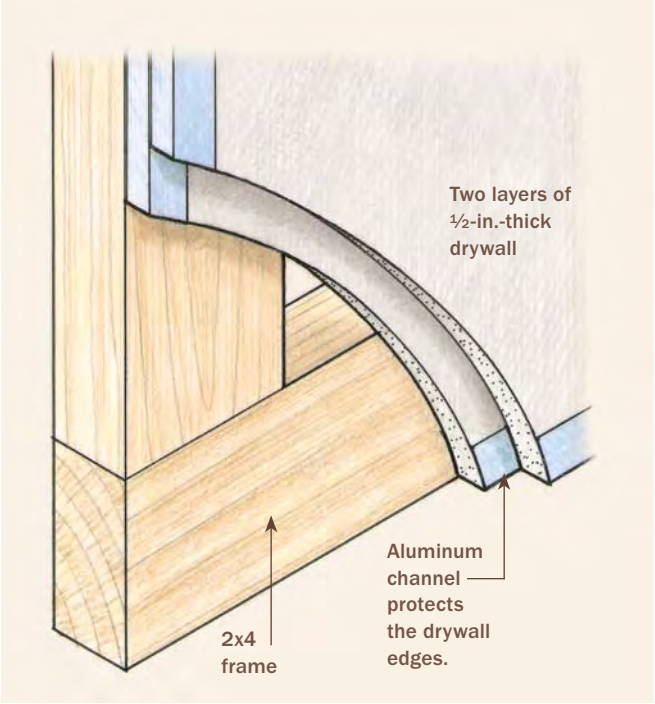

A shop-built solution to storing flammable liquids. Ryden built a basic storage cabinet for flammables in the garage adjacent to his shop. He used 2x4s for the frame and covered that with two layers of drywall. He encased the edges of the drywall with aluminum channel to keep the gypsum from crumbling. By hinging the door at the top, it self-closes when he removes the strut that holds the door open so he can access the shelf inside.

on open shelves. These cans are considered by the National Fire Protection Association as the most hazardous of all flammable or combustible materials. Once ignited, finish supplies quickly can turn a small fire into a dangerous, raging inferno.

Commercially available storage cabinets for finishes can be expensive. But for small home shops, you can make your own inexpensive version by surrounding the contents on all sides with two layers of ½-in.-thick drywall, which will greatly slow the speed at which a fire will spread to the finishes inside the cabinet. The door should be self-closing, and the shelves should be lipped to contain any spilled liquid.

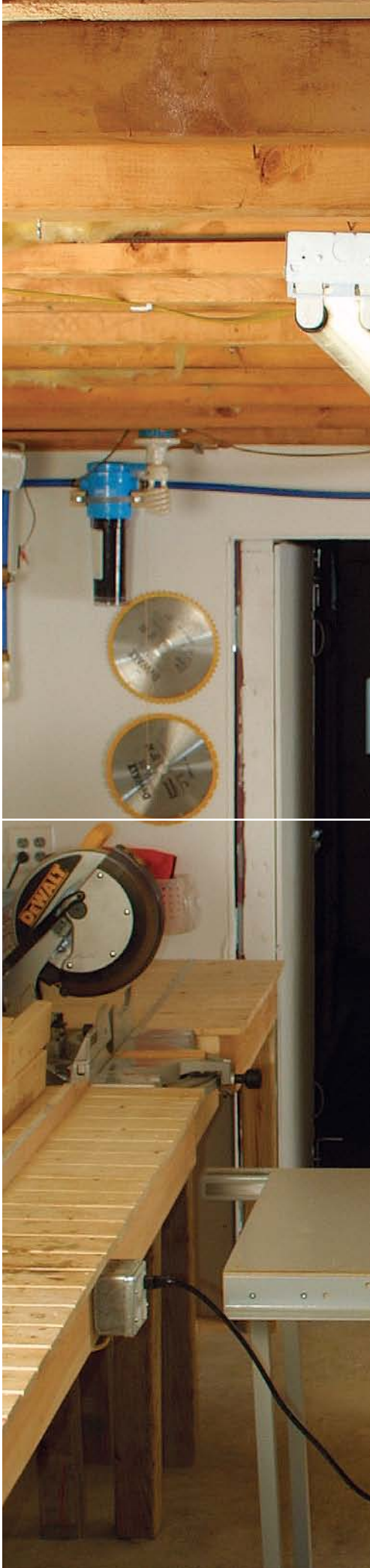

Combating a fire in the shop. If a fire occurs, damage will be minimized if a sprinkler system has been installed. Heat detectors provide an early warning and don't commonly suffer malfunctions in dusty environments. A fire extinguisher can prevent a small fire from getting worse, but you should always call the fire department first.

Automatic sprinkler system. A typical sprinkler head will spray an area about 10 ft. by 10 ft. You can connect sprinklers to copper, galvanized, or PVC plastic pipes. PVC is the least expensive to install. Prime the pieces first with a cleaner, then daub on the cement.

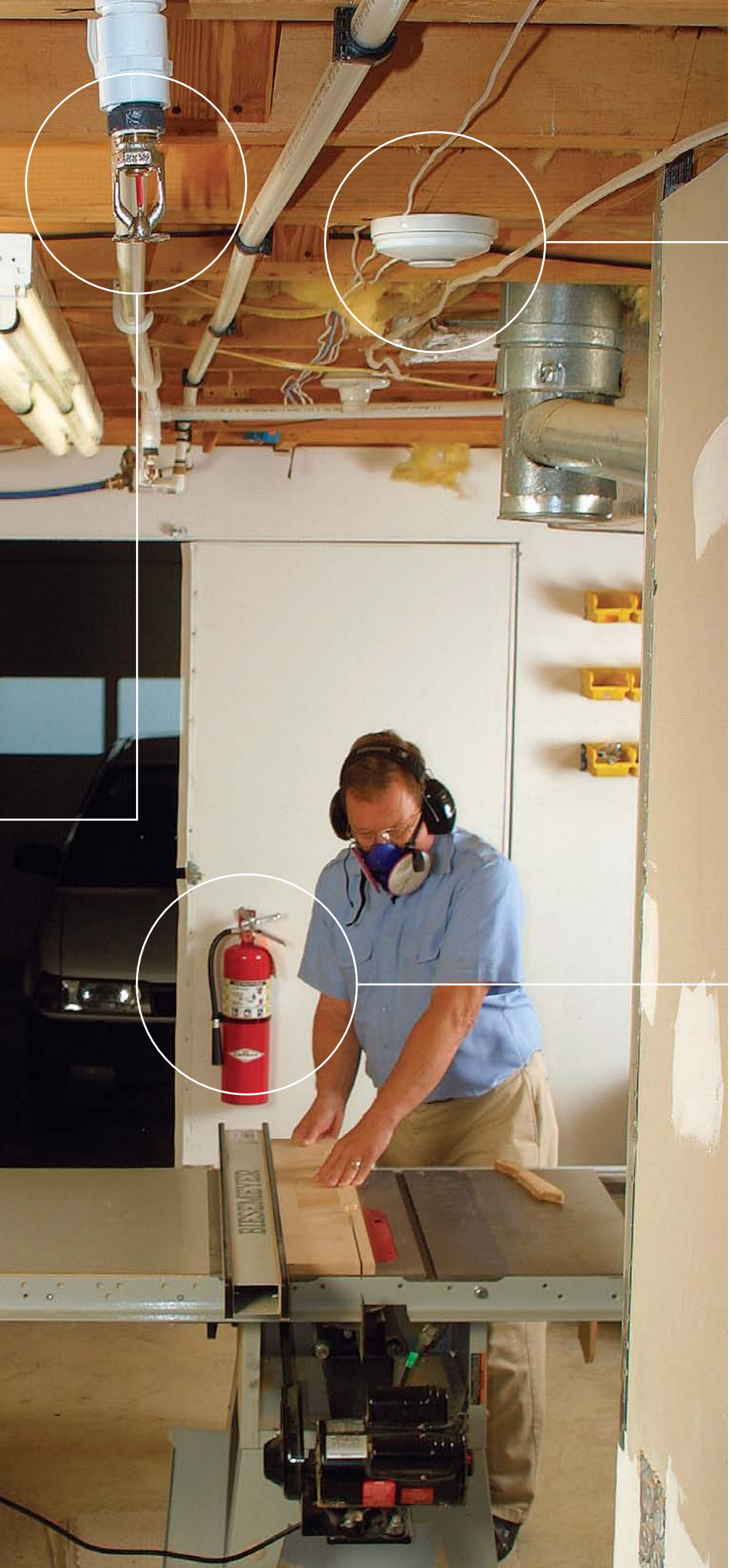

Heat detector. Smoke detectors can malfunction because of the dust found in the air of most woodshops. Heat detectors are a better choice in dusty environments. They are activated when the room temperature reaches a preset level, usually 135°F to 165°F. The heat detector in Ryden's shop is powered by a circuit from the electrical service panel, and it is connected to a commercial alarm service through a telephone line.

Fire extinguisher. Use an extinguisher rated ABC to fight woodshop fires fueled by wood, finishing supplies, or bad electrical connections. Extinguishers should always be placed near an exit so you won't get trapped by a fire while trying to access the extinguisher.

Equip the shop with heat detectors

The most sensitive detection device is the human nose, which can smell smoke long before any electronic gadget can detect it. But when you're not in the shop, you must rely on other detection devices. Electronic detectors fall into three major categories: heat, smoke, and flames. Of these, heat detectors are best for a woodworking shop. Smoke-detection devices—both the ionization type and the photoelectric type—are susceptible to false alarms caused by the dust generated in a woodshop. Flame detectors are not as susceptible to dust contamination, but they are much more expensive than heat detectors.

There are three types of heat detectors: fixed temperature, rate of rise, and a combination of both types. The fixed-temperature devices usually are set in the 135°F to 165°F range. When the temperature of the room reaches the preset level, the alarm sounds. The rate-of-rise detectors measure how quickly the room temperature increases. When it rises more than a certain number of degrees in a preset time period, the alarm sounds. The combination-type detector is the best for woodworking shops because it will sound the alarm as soon as it detects either a slow, smoldering fire or a quickly spreading fire. This alarm can be either a local alarm (sounding just inside or outside of the shop), or you can connect it to a monitored service (such as ADT or Brinks).

Putting out a fire once it starts

While detection devices are good to have in the shop, they do nothing to slow or stop the spread of a fire. This is best done by an automatic sprinkler system that utilizes water to be discharged only in the vicinity of the fire, most often extinguishing the fire before it can spread. Most of us would rather come into the shop and find some water damage than find that the entire shop has been destroyed. There are systems that can be installed to detect water flowing through the sprinkler piping and sound an alarm, thereby reducing the water damage.

Sprinkler heads are readily available and inexpensive. It only took me eight hours to plumb my 900-sq.-ft. shop with sprinklers — a small investment for a lot of peace of mind.

The most common sprinkler heads are the pendant style, which hang below the piping, and the upright style, which stand above the piping. They must be installed in the correct position or they will not function properly. In most shop situations, the pendant head is appropriate. These heads are available from local fire-sprinkler contractors, but there are also some online suppliers. The only application where water-sprinkler heads are not appropriate is in an unheated shop in a cold climate.

Place extinguishers near an exit

Every shop should have at least one well-maintained, easily accessible, portable fire extinguisher. Fire extinguishers are first-aid appliances. You must know when to use them and when to back off and let a professional handle the situation. The first thing you should do when a fire is detected is to call the fire department. They can always go home if they're not needed.

Fires are classified into four different categories: A, B, C, and D. The easiest way I know to remember them is as follows:

Category A involves anything that leaves ash when it burns (paper, wood, cloth); category B involves burning liquid (gasoline, paint, paint thinners, oil-based products); category C includes circuit fires (live electrical fires in wiring, wiring devices, motors, electrical appliances); and category D fires involve combustible metals, which usually are not found in woodworking shops.

The most effective fire extinguisher for a shop is at least a 10-lb. multipurpose dry-chemical fire extinguisher, rated ABC on the label. This type of extinguisher can be applied to any kind of fire in a shop, has sufficient agent to extinguish almost any fire in its early stage, and can be used with minimal training.

Another consideration with fire extinguishers is where to place them. You should always have to go toward an exit door to access the extinguisher. That way, if the fire suddenly builds, you have a way out of the shop without having to go past the fire. Always keep a door at your back when using a fire extinguisher. Never allow a fire to come between you and a safe way out.

Sources

SPRINKLERS

Sprinkler heads can be purchased from either a sprinkler-installation contractor or a plumbing-supply store.

HEAT DETECTORS

Heat detectors are offered at most electrical-supply stores and at many online suppliers.

FIRE EXTINGUISHERS

Fire extinguishers are available at most hardware stores and home centers.

Cutting-Edge First Aid

PATRICK SULLIVAN

Woodworkers spend a lifetime handling razor-sharp tools, power equipment with exposed blades, and boards that harbor splinters and fasteners. In this environment, there's always the risk of an injury.

Usually woodworkers cut their fingers and occasionally the palms of their hands. Although the hand often will recover from minor injuries even if it receives no care at all, recovery is faster with less scarring and less risk of infection if it's treated properly. For more serious cuts and eye injuries, however, what you do first can have an impact on the rest of your life.

As a woodworker and physician, I understand the types of injuries that are common in the shop, and I know how they should be treated. Forget the first-aid kits offered in drug stores. Forget much of the misguided advice found in popular manuals. The woodworking environment is unique, and I'll tell you about some specialized equipment and supplies that work well there. I'll also show you a few tricks on treating wounds—from stopping bleeding to cleaning to bandaging—based on proven medical principles. In the end, you'll learn how to treat injuries in a way that gets you back to work as soon as possible.

How to handle most cuts

The enemy of healing is infection. The germs that live on lumber and tools generally do not cause disease; essentially, all the risk is from bacteria you already carry on your skin. A wound allows those skin germs to reach the more vulnerable tissue beneath the skin. The problem gets worse if there is dirt, sawdust, debris, or dead tissue in the wound.

Soap and water

The most effective treatment for all wounds is immediate washing with soap and clean water. (You can skip this if you need to go to the emergency room, because they will clean the wound there.) Washing drastically reduces the number of germs and takes away dirt and debris in which bacteria can hide and multiply.

I have seen several Internet pictures and videos that show first-aid techniques that advocate wiping the wound clean with a damp paper towel or gauze pad. This is the most ineffective way to wash a wound.

The surest way to clean a wound is to hold the cut under running water for several minutes and lather thoroughly. If soap is not available, plain water will do a credible job. Wash every wound, whether you can see contamination or not. Waterless hand cleaners and antiseptic solutions may be better than nothing, but they are not a proven substitute for washing. If you can wash effectively, you do not need these products.

Doctors and first-aid manuals in the past have routinely recommended the use of

Lather up

Wash both hands vigorously enough to generate lots of lather under a strong stream of warm running water for several minutes. While washing, hold the cut open and flush the wound for at least a minute. Ignore any bleeding this may cause. Dry both hands on a clean paper towel.

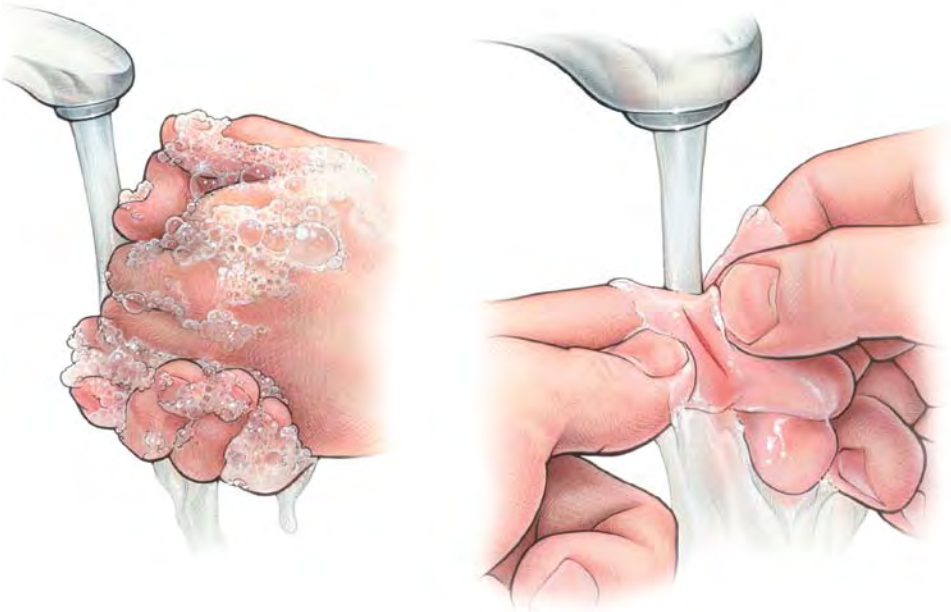

an antibiotic ointment, but recent surgical research proves that clean wounds need no antibiotic if they are washed well and closed promptly. Moreover, the ointment preparation discourages the formation of a scab, which is the most effective wound closure available. Skip any antibiotic ointment unless dirt and debris were driven into the wound and cannot be washed out.

Five minutes of pressure

After washing the wound, you need to stop the bleeding. Apply pressure directly over the wound for five minutes without interruption to help form a clot. If you peek, the clock starts all over again.

TIP **If you get a minor cut, say, while you're in the middle of a glue-up, you don't have to stop working. Put on an examination glove, and wrap masking tape snugly around the finger directly over the cut. The glove keeps blood off the woodwork, and pressure from the tape will usually stop the bleeding in 5 to 10 minutes. After removing the tape and glove, wash your hands thoroughly, and close and dress the wound.**

Build a custom kit

A first-aid kit for woodworkers looks very different from the kits sold in drugstores. It contains materials for closing cuts, flexible coverings for wounds, tools for removing splinters, and eye wash. Many of these products are available from multiple manufacturers.

1. Coban tape
2. Glue syringe
3. Eye wash
4. Tegaderm bandages
5. Band-Aids
6. Examination gloves
7. Magnifying lens
8. Steri-Strips
9. X-Acto knife
10. Krazy® Glue
11. Scissors
12. Tape
13. Tweezers


6
100 MEDIUM
BAND-AID
SHEER STRIPS
You're going to be just fine!™
BAND-AID
BRAND ADHESIVE BANDAGES
SHEER STRIPS
Breathable
All-Purpose
Protection
40
Johnson & Johnson
5
Powder-Free
Gloves
7
13
12
11

Be direct

Don't be afraid to touch the cut. Apply pressure directly over the wound (bottom), not below it (top).

Wrong

Right

Adhesive-backed Steri-Strips keep cuts closed

Dry the skin around the wound, then cut the strips to length. Remove the paper backing and apply. Adhere the strip to one side of the cut, push the wound edges together so they just meet, and stick the strip down on the other side.

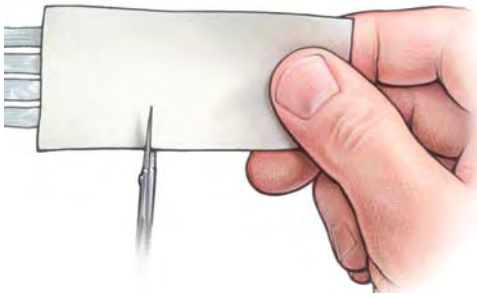

Close the wound before bandaging

When you get cut, keeping the two edges of the wound firmly closed will help it heal rapidly. Cuts from sharp tools penetrate cleanly, which makes them easier to close and faster to heal. Wounds with frayed or crushed edges (such as those made by a spinning tool) take a bit longer to heal. In either case, you want to wash and close the wound to pull the sliced skin back together.

Standard adhesive bandages cover the wound but don't securely close it. As soon as you start using your hands, skin movement will reopen the cut. Hospitals often use a specialized tape product called Steri-Strip™, which you can buy without a prescription in most drugstores or online.

It is also possible to glue wounds closed with ordinary cyanoacrylate glue. Both methods work better if you have a helper to either hold the wound closed or to apply the Steri-Strips or glue.

A different kind of glue-up

Cyanoacrylate glue works for closing a wound. But the job is not like butting two boards together. Do not apply glue inside the wound. Instead, push the skin edges together and spread a thin layer of glue across the top of the skin, interrupting the glue at short intervals to preserve flexibility. Don't use the activator spray that comes with some glues.

Wrong

Right

Better than a Band-Aid®

After closing the wound with a Steri-Strip, apply a Tegaderm bandage. Put on the bandage and then peel off the paper frame. If you need to cut the bandage to a smaller size, do it while all the backing paper is still in place. The bandage is thin and flexible, allowing nearly full knuckle movement.

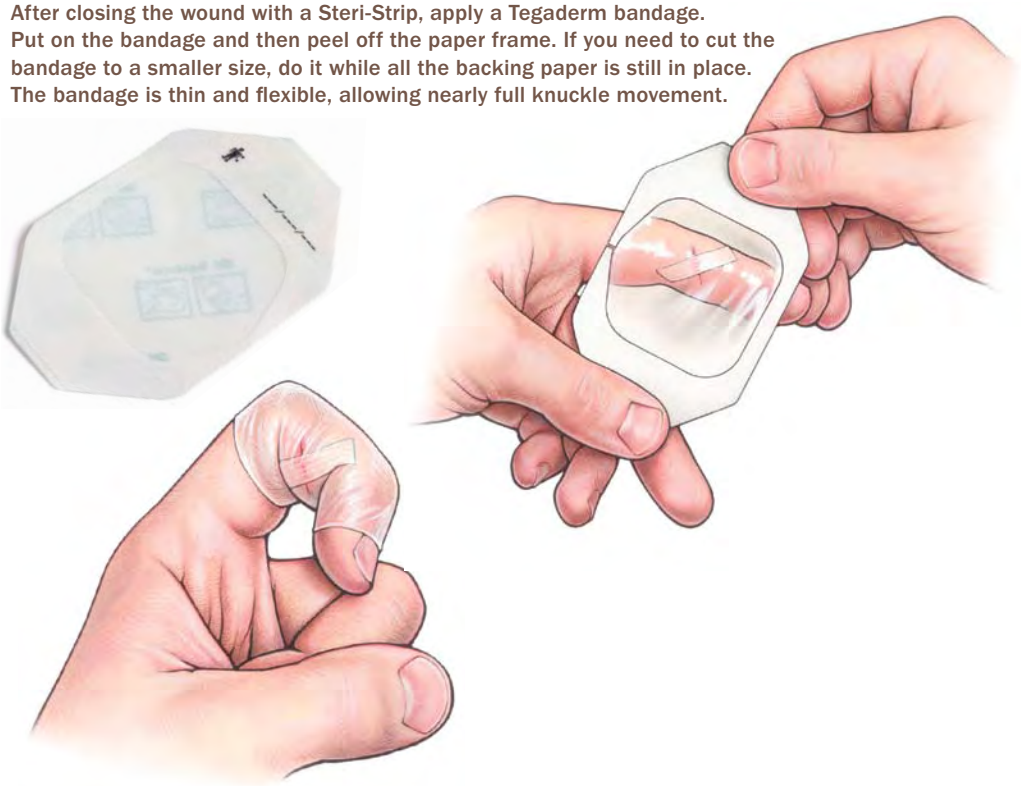

Smarter bandages

If you go to an emergency room with a hand injury, you'll come home with a huge, fluffy bandage that will attract a lot of sympathy but render you unable to work. Emergency rooms use gauze as the main element of bandaging. Gauze is light as air, extremely flexible, and breathes like it wasn't there at all. However, you cannot work wood while wearing gauze.

Woodworkers need bandages that are flexible, thin, and tough. It is also convenient to have bandages that shed water, sawdust, and glue, and yet breathe so the skin stays dry. Here are two bandages that you can use after you've closed the wound or after you've come home from the ER.

The first option is to cover the area with a Tegaderm™ dressing (see bottom drawing on p. 187). Tegaderm is a transparent medical dressing (made by 3M™) that's flexible, tough, and stretchy. It is great for hand wounds because it can be conformed to a number of shapes and is so smooth that it won't catch on any sharp edges, like an adhesive bandage can. This product is available with and without a nonstick, absorbent pad in the center. Many wounds will seep a small amount of serum in the first few hours after bandaging, and the absorbent pads are useful then. Later, they may be unnecessary.

This might be all you need. If you have to handle rough lumber, or do work that applies a lot of friction or abrasion to your hands, consider wearing leather or fabric gloves to protect the dressing.

Injuries that involve the palm or the webs between the fingers are very hard to bandage.

When you need more holding power, use Coban tape

It's hard to keep a bandage in place on the palm of your hand, so wrap the dressing with Coban tape (1 in. wide usually is sufficient). First take a couple of wraps around the wrist. This serves to anchor the whole bandage. Then continue with several wraps around the palm. End the Coban on the back of the hand or wrist, where it will receive the least rubbing.

Deep cleaning

As you wash, open the wound as much as possible, and squirt water in with a squeeze bottle or a glue syringe. Don't be bashful about the amount of water. You want to flush the wound vigorously enough to get rid of any debris at the bottom of the puncture.

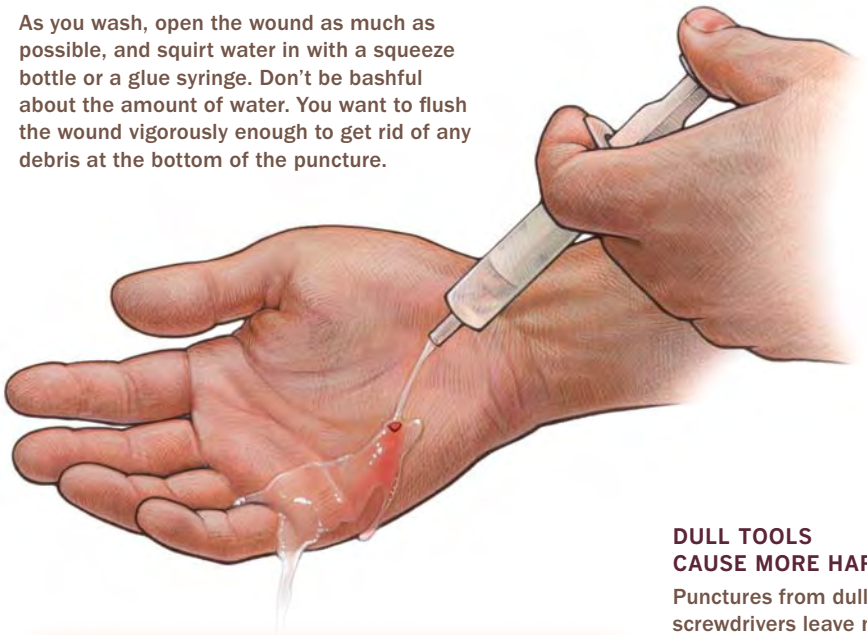

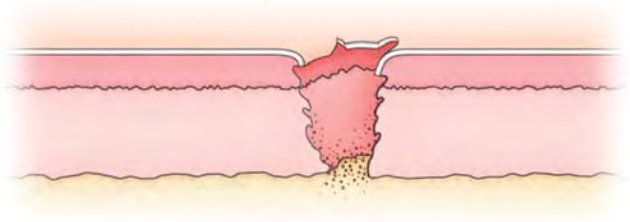

DULL TOOLS CAUSE MORE HARM

Punctures from dull tools like screwdrivers leave more crushed and damaged cells, and the dull edge often pushes the skin, dirt, and debris back into the wound, creating more chance for surface skin bacteria to be lodged in underlying tissue. These wounds really need to be flushed out.

For these areas, cover the closed wound with Tegaderm, and then wrap Coban™ around the hand as necessary. Coban is a very stretchy bandage that sticks to itself, but not to anything else. It is excellent for bandages involving the palm or wrist because it stretches greatly but always remains snug.

Punctures: Wash away debris

Punctures from clean, sharp tools like narrow chisels, scratch awls, and marking knives should pose very little hazard and require very little treatment (unless they penetrate into joints or cut tendons). The wounds tend to close themselves. Wash thoroughly and apply a small bandage until bleeding stops.

If you have a puncture wound caused by a dull tool, you have an increased chance of infection (see drawing above). First wash the area thoroughly. As you wash, flush out the wound with water using a squeeze bottle or glue syringe. Apply Tegaderm with an absorbent pad. If the wound becomes more puffy and painful over a period of several days, have it seen by a doctor.

Puncture wounds carry a very small risk of tetanus. You were immunized against tetanus in childhood, but your immunity needs a booster every 10 years. Keep this up to date.

Do you need a doctor?

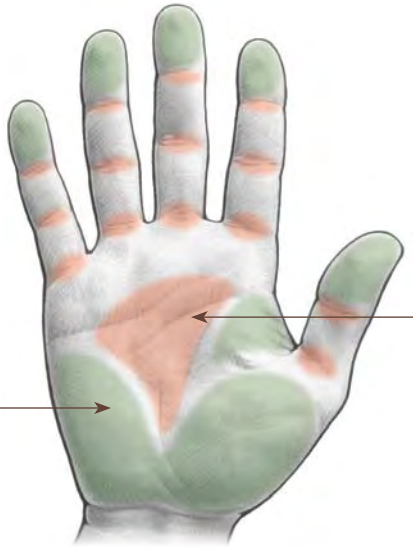

VULNERABLE AREAS OF THE HAND

Areas highlighted in green contain very few vulnerable structures, such as tendons. Unless the wound obviously penetrates into a bone or joint, cuts here typically can be treated easily at home.

Areas in red, however, contain tendons. Deep cuts in these areas are likely to have damaged the tendons or tendon sheaths and should be examined by a doctor.

IF THE CUT WON'T CLOSE, GET IT STITCHED

Cuts that do not slice all the way through don't require stitches because the lower layer of skin keeps the wound reasonably closed.

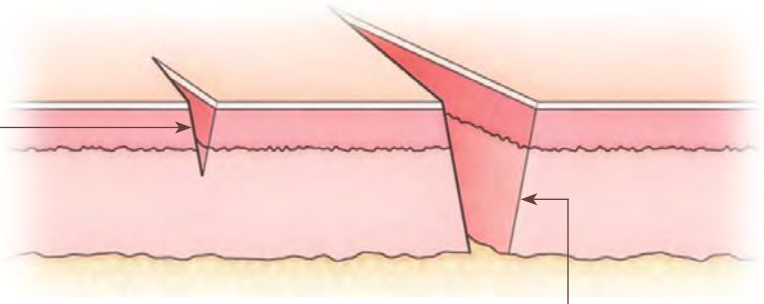

The cut on the right penetrates all the way through the skin, revealing the fat beneath. A deep cut like this that's under 1 in. long usually can be treated at home; if it's longer than 2 in., the wound needs to be stitched. In between 1 in. and 2 in., the decision to get stitched depends on the location of the wound (below).

The cut on the thumb can be treated at home. It is short, and although deep, tends to close itself. Normal hand movements will not apply stress to the wound.

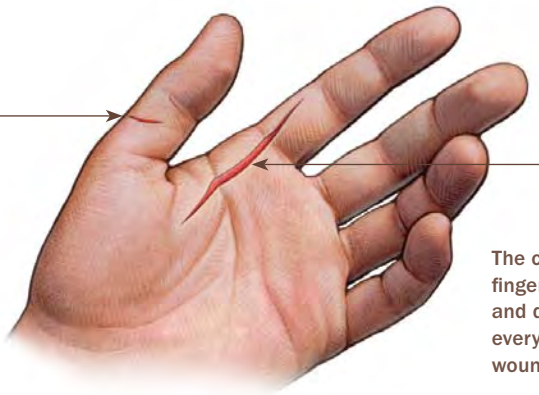

The cut on the palm and index finger begs for stitches. It is long and deep and in a location where every hand activity will stretch the wound apart.

Stubborn splinters need to be sliced out

To reach long slivers that tunnel through the skin, use an X-Acto knife with a No. 11 blade. First wash your hand and the blade. Insert the back of the blade along the top of the splinter, and gently slice open the skin with the tip of the blade. Slice along the splinter's length to expose it as much as possible, then pull it out with tweezers.

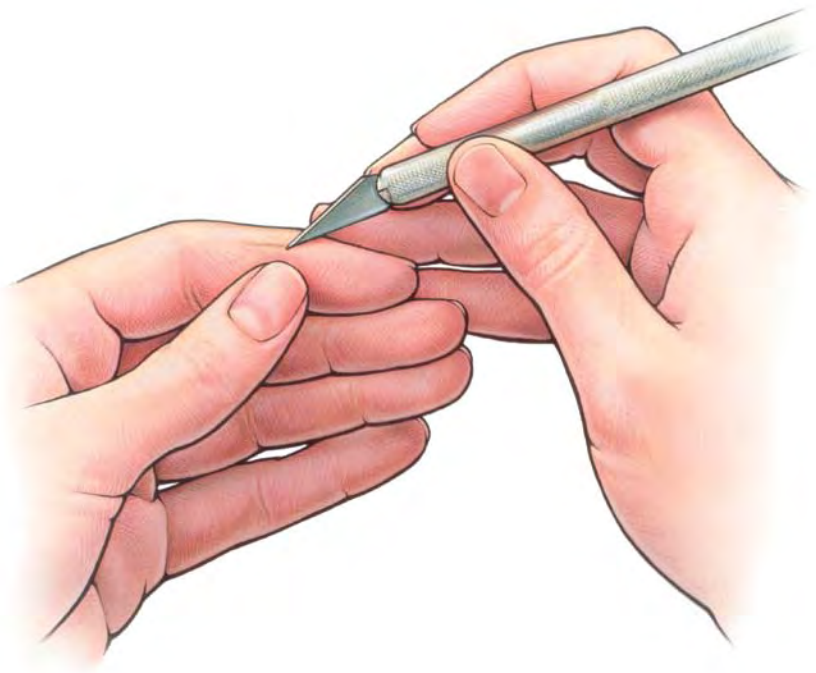

Splinters: Pull or slice them out

Everyone who works with wood has had splinters in their skin, and virtually everyone has struggled to remove them. If you have trouble seeing the splinter, use magnifying glasses, whether it's a pair of inexpensive reading glasses or visor-type magnifiers that you can wear over eyeglasses. These magnifiers may come in handy for other shop uses, too, like working with small parts or chiseling to a line in tight spaces between dovetails.

Usually you can pull out the splinter with a pair of tweezers. However, if a splinter has tunneled a long distance under your skin, you'll have to gently slice the skin to reach it using a No. 11 blade in either a disposable scalpel or an X-Acto® knife. After slicing, pull out the splinter with tweezers.

Be sure to wash your hands and the blade thoroughly before you probe around in the

Rinse and repeat

The safest and easiest way to remove foreign particles in the eye is to rinse them away with a spray of eye wash. Lift the eyelid and spray vigorously. If necessary, repeat several times.

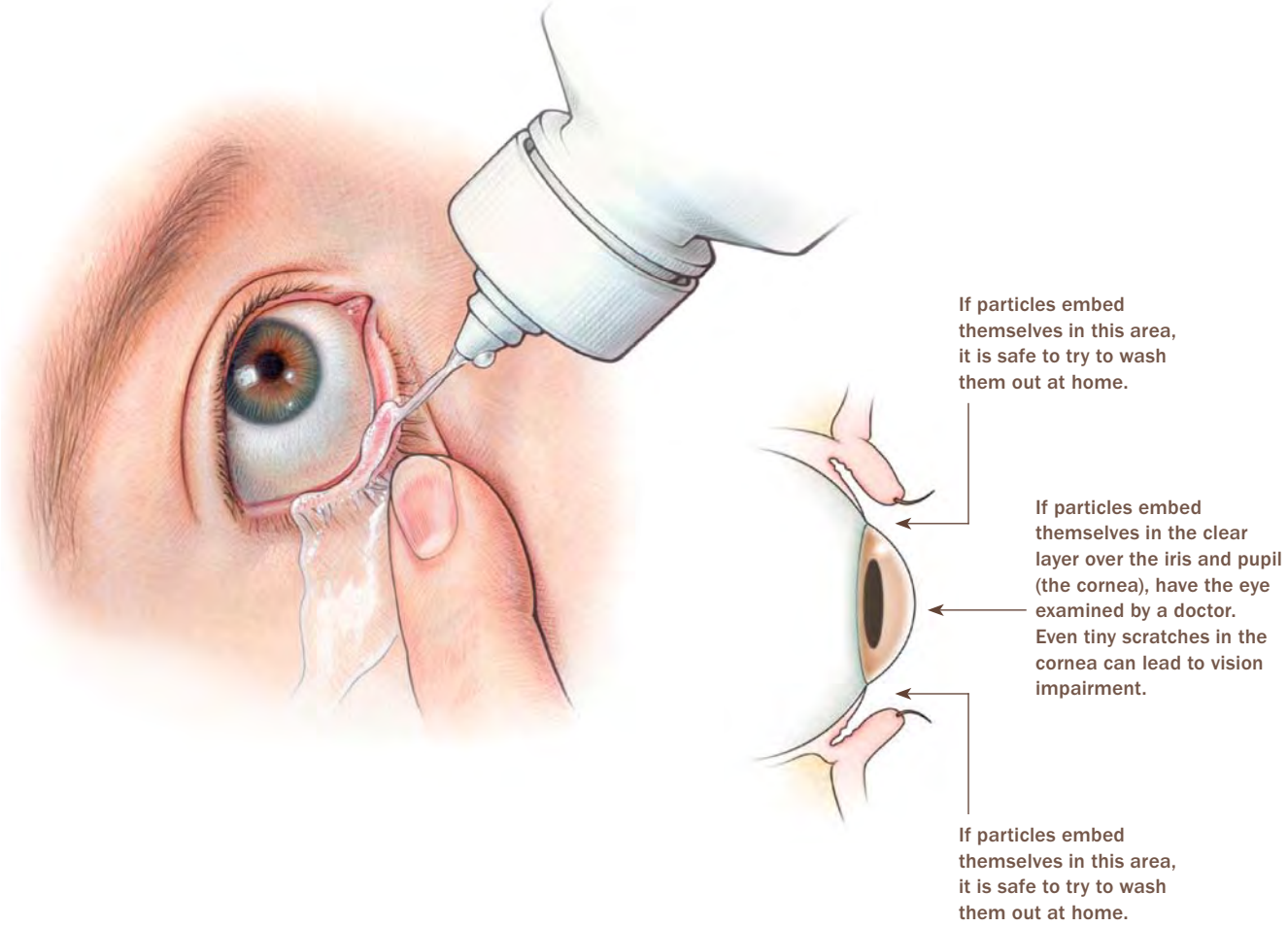

skin. Sterility is not necessary, but cleanliness is very important. Usually no dressing is needed; but if you had to dig so deeply that the wound bleeds significantly, then dress this as you would a cut.

Eyes: Rinse carefully or see a doctor

When you cut wood, especially with a router or tablesaw, sawdust (and sometimes other material) will fly. If some of that small debris ends up in your eye, your natural tears will usually wash it away. If the debris digs in and resists being washed away by tears, the best answer is to retract the eyelid away from the eyeball, and flush the eye with an eye-wash solution.

Get someone to help you. Lie on your back—it is hard to flood the eye with solution while you are upright. Have your helper put on your magnifiers and look in your eye for the debris. Regardless of whether they see the offending particle or not, have them squirt the solution under both lids. Use

Serious injury? What to do as you head to the hospital.

Some woodworking injuries demand professional care. Cuts that are deep enough to obviously penetrate into joints or bone, or that appear to cut tendons, should be treated by a doctor within a couple of hours. These injuries require the removal of foreign material embedded at the bottom of the wound and may require special suturing. They also carry greater risks of infection, and preventive antibiotic treatment is sometimes needed. For these wounds, stop the bleeding by applying pressure with a gauze pad or a clean paper towel and have someone drive you to the emergency room.

If you tangle with a power saw, that is going to mean a trip to the hospital. There is little that can or should be done in the shop, other than applying pressure to the wound and arranging for rapid transportation to the hospital. If you cut off some part of your hand, press directly on the wound to stop the bleeding, seal the amputated part in a zippered plastic bag, and get to the hospital fast. Don't try to drive yourself. If that trip is going to take more than an hour, carry the plastic bag in some ice or cold products from your freezer. Amputated fingers can survive for more than six hours.

Any kind of injury to the eyes is scary. Any injury that penetrates the eyeball or cuts through the eyelid must be seen by a specialist. If tiny flecks of wood or metal embed themselves in the cornea (the clear layer overlaying the iris and pupil), have them removed in the ER. When in doubt about any eye injury, you should have the eye examined by a pro. Tape a gauze pad or a tissue over the closed eye while you are on your way to the hospital. This discourages the eyelids from moving, which usually reduces any discomfort.

towels or tissues to sop up the excess, and use plenty of liquid. If that does not work, do it again. If repeated irrigation of the eye does not dislodge the particle, seek professional help. Never use tweezers or hard instruments in the area of the eye.

If there is so much spasm of the eyelids that you cannot open the eye enough to see what is going on, that suggests a more serious eye injury, and you should get immediate professional help.

Protect Yourself from Wood Dust

JEFF MILLER

Wood dust is a woodworker's constant companion and a constant threat. It doesn't take much airborne dust to exceed the exposure limits recommended by the National Institute for Occupational Safety and Health. In fact, you'll quickly blow past them when machining or sanding wood. Dust collectors and air cleaners help control wood dust, but even when optimized for your shop, they don't catch it all. The smallest and most dangerous particles escape them.

Exposure to those minute particles can cause nasal and sinus-cavity irritation, allergies, lung congestion, chronic cough, and cancer. That's why it's important to wear a dust mask or a powered respirator whenever you're producing dust or working in the shop afterward.

You're more likely to wear a dust mask or respirator if it's comfortable and fits well. You might need to look beyond your local hardware store, but great choices are out there. In fact, there are so many options you might feel overwhelmed. But that won't happen if you know how dust masks and respirators work, how to tell if one fits you well, and which features make one more comfortable.

I tested a large selection of masks and respirators and had the editors at *Fine Woodworking* do the same. I'll tell you what we liked about them and what we didn't. That will help you know where to begin your search for a good-fitting and effective dust mask or respirator.

After all of our testing, it's clear that there are a few key features that make for a great mask or respirator. You should put them at the top of your list before you shop.

Filters for wood dust

For protection from wood dust, look for a mask rated N95, N99, or N100. The ratings don't apply to powered respirators, but all the respirators tested clean the air as well as an N95 mask does.

A place to hang your mask. The Moldex Handy Strap makes hanging a mask around your neck a snap (left), a big plus when you need to take it off momentarily to speak, get a drink, or make an adjustment. The strap makes putting the mask on easier, too (below).

A better fit for more noses. Masks with adjustable nosepieces work for more people because they can be tailored to the individual's nose. The nosepieces help prevent fogging by giving a better seal around the nose.

3M 9211
www.masksnmore.com

MOLDEX N95 WITH EXHAUST VALVE
www.leevalley.com

MOLDEX EZ-ON WITH EXHAUST VALVE
www.grainger.com

Comfort and fit matter most

An exhaust valve is an indispensable feature on a dust mask. In fact, we recommend you steer clear of any dust mask that doesn't have one. Exhaust valves clear the warm air you exhale, prevent safety glasses from fogging, and help keep your face cooler.

You also should look for a mask that is made from face-friendly material. The interior of the 3M 8511, for example, is soft and fleece-like. An adjustable nosepiece is important, because it allows the mask to form a tighter seal against your face and allows you to customize the mask to the shape of your nose.

Adjustable straps are a big plus, because they make for a tighter fit. Testers liked the adjustability of the straps on the Willson® Saf-T-Fit Plus and applauded the versatility

Get a Vent

Our testers clearly favored vented masks because they are more comfortable. They allow hot air to easily escape through the front of the mask, so your face stays cooler and your glasses won't fog.

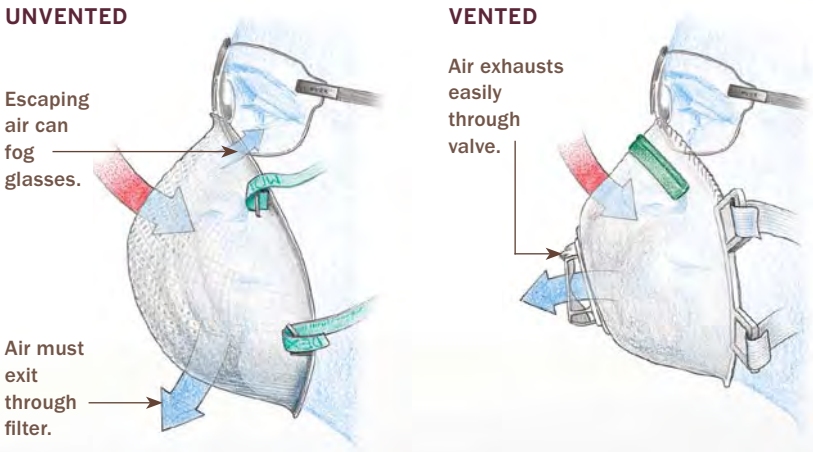

OUR FAVORITES

WILLSON SAF-T-FIT
www.grainger.com

This mask just about has it all. It's made from a comfortable material and has an exhaust valve, adjustable straps, an adjustable nosepiece, and a foam gasket that seals tightly against your face.

MOLDEX N100 WITH HANDY STRAP
www.grainger.com

3M 8511
www.grainger.com

This is another great mask, even though it doesn't have adjustable straps. It has an exhaust valve, the inner lining is soft, and the nosepiece is adjustable. Two testers picked this as their favorite.

Which one is right for you?

For most people, a high-quality dust mask works great. A powered respirator is a better choice if you need protection from flying chips or if you have facial hair, which keeps a dust mask from working properly. Most respirators have integrated, safety-rated face shields.

DUST MASKS REQUIRE A TIGHT FIT

A dust mask should seal tightly against your face. That keeps bad air from seeping in.

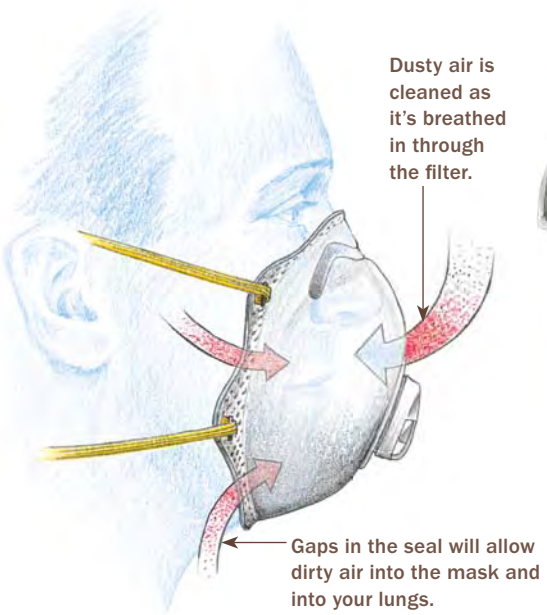

POWERED RESPIRATORS USE POSITIVE PRESSURE

Respirators use a fan to pull dirty air through a filter. The clean air flows down over the face, preventing bad air from flowing into the mask.

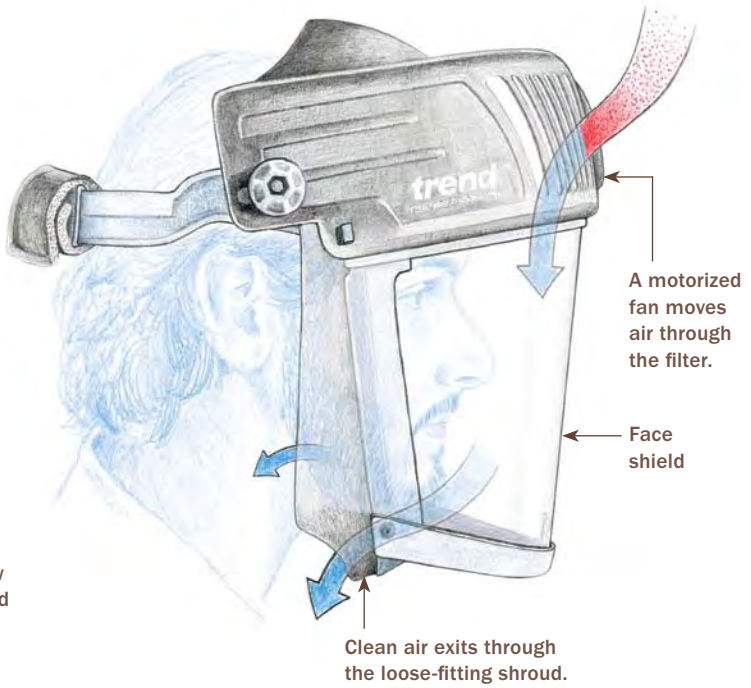

of the Moldex® Handy Strap, which allows you to hang the mask comfortably around your neck.

Some features don't reveal themselves until you have a mask on. You don't want a mask that interferes with your vision or safety glasses, prevents you from speaking audibly, or interferes with hearing protection.

Because they have nearly all of these features, two masks really stood out from the rest: the 3M 8511 and the Willson Saf-T-Fit.

Respirators are harder to peg than dust masks, but there are a few key features to look for. The weight and balance of the helmet, for example, are important. If a respirator doesn't sit well on your head, you'll take it off

Protection from the big stuff, too. Many respirators have an integrated safety-rated face shield, which makes them great for turners.

Powered respirators

AIRCAP2

www.woodcraft.com

The filters and a fan are perched on the cap of this lightweight respirator. The face shield is not a safety device.

TRITON POWERED RESPIRATOR

www.woodcraft.com

In addition to being a respirator, the Triton provides a full-face shield, a helmet, and integral hearing protection. A Belt pack holds the fan, filter, and batteries. The fan and filter are connected to the helmet by a hose. It's great for rough work, but the face shield distorts your vision.

POWER AIR RESPIRATOR

www.rockler.com

This respirator resembles a reusable dust mask, but it's heavier because the filter, fan, and motor are on the mask. The batteries go in a belt pack. Everyone who tested this one found it uncomfortable.

OUR FAVORITES

TREND AIRSHIELD

www.envirosafetyproducts.com

Testers found the Airshield comfortable because of its padded headband. And even though the fan, motor, filter, and battery are perched on your brow, its weight is reasonably well balanced.

TREND AIRSHIELD PRO

www.envirosafetyproducts.com

The filter, fan, motor, and battery are located on the top of this respirator, so its weight is very well balanced. The optional earmuffs work well once you get everything adjusted. It provides the best filtration of all the powered respirators tested.

Reusable masks: A good alternative for some

Disposable masks and those with replaceable filters clean air in the same way. The difference shows up when it's time to replace the filter. With a reusable mask, you replace just the filter section and keep the "frame" that holds it. Although they cost more up front, their filters last longer and are less expensive. They are heavier and can be less comfortable than disposables, but if you find one that fits you well, a reusable mask could be a good option.

NORTH CFR-1 COM-FIT
www.grainger.com

very quickly. And the face shield shouldn't distort or interfere with your vision. You also should be able to wear some kind of hearing protection with the respirator on.

Of the respirators we tested, the Trend® Airshield® and Airshield Pro distinguished themselves for comfort, clarity of vision, and overall user-friendliness.

Keep the clean air flowing

Dust masks don't last forever. Replace yours when it becomes difficult to breathe through, when the mask no longer seals properly, or when it is damaged.

If you use a respirator, make sure to check its airflow regularly. When it doesn't move enough clean air, it's time to replace the batteries, the filter, or both.

Sound Advice

DAVID HEIM

Hearing protectors are the workshop equivalent of the galoshes your mother nagged you to wear. If you obeyed your mother then, chances are you're pretty diligent now about using hearing protectors whenever you turn on noisy shop machines. But if you didn't listen to Mom, you probably forgo ear protectors, thinking they're too uncomfortable, you'll get used to the noise, or you needn't bother because you'll be working for only a few minutes. And you probably still wreck your dress shoes in the rain.

We posted a poll on www.FineWoodworking.com asking what type of hearing protection people used most often. More than 6 in 10 of the 1,018 respondents said they used earmuff-style protectors. Disposable foam plugs came in a distant second. But 1 in 10 said they usually don't wear hearing protection.

In fact, hearing protectors are as essential to a well-equipped, safe shop as good lighting, safety glasses, and an effective dust collector. Sounds that are too loud, even if they only last a short time, will damage your hearing. The louder the sound, the faster it can cause harm. And you don't get used to loudness—you lose your hearing and/or end up with tinnitus, a permanent ringing in the ears. The problem is that hearing damage builds up in tiny increments over the course of a lifetime, and before you know it, it's too late.

You probably need to wear hearing protectors more often than you think, but that no longer has to mean using plugs that seem as form-fitting as a tapered 2x4 or wearing muffs that make you feel as if you're in a soundproof room.

A wave of new technology

The simplest, least expensive earplugs and muffs reduce sound levels uniformly. They're designed to absorb some of the energy in the sound waves hitting our ears, cutting it by, say, 20 db. Many newer products are smarter, providing variable protection. Some plugs have pinholes that allow you to hear sounds at safe levels but reduce louder, harmful noises. Others have various kinds of acoustic baffles. Many promise improved comfort. Newer earmuff-style protectors come with electronics to help minimize the plugged-up and isolated feeling you can get from conventional muffs. Some have a microphone that picks up nearby sounds. Others have an FM/AM radio. Still others combine the microphone and the radio. What all these smart muffs have in common is the ability to cap the noise level hitting your ears at 80 to 82 db.

Noise-canceling headphones may be the most sophisticated type of hearing protector, but they may not be the best for woodworkers. Sold mainly to travelers seeking relief from the drone of jet engines, these headphones generate an inverted version of the

Noise levels, tool by tool

Sound is measured in decibels, a unit named for Alexander Graham Bell, who was known for his research into acoustics and deafness before he invented the telephone. The decibel scale is logarithmic, not linear. Every 3-db. increase means a doubling of the sound energy hitting the ear.

We can safely tolerate sounds up to about 85 db. But as the graph below shows, many shop machines emit much more sound. Past that 85-db. threshold, you must limit exposure and don hearing protectors to avoid long-term damage.

The National Institute for Occupational Safety and Health maintains an online database that lists the loudness of 120 popular tools from 14 manufacturers (www.cdc.gov/niosh-sound-vibration/). You also can play a 5-second-long audio file for each tool.

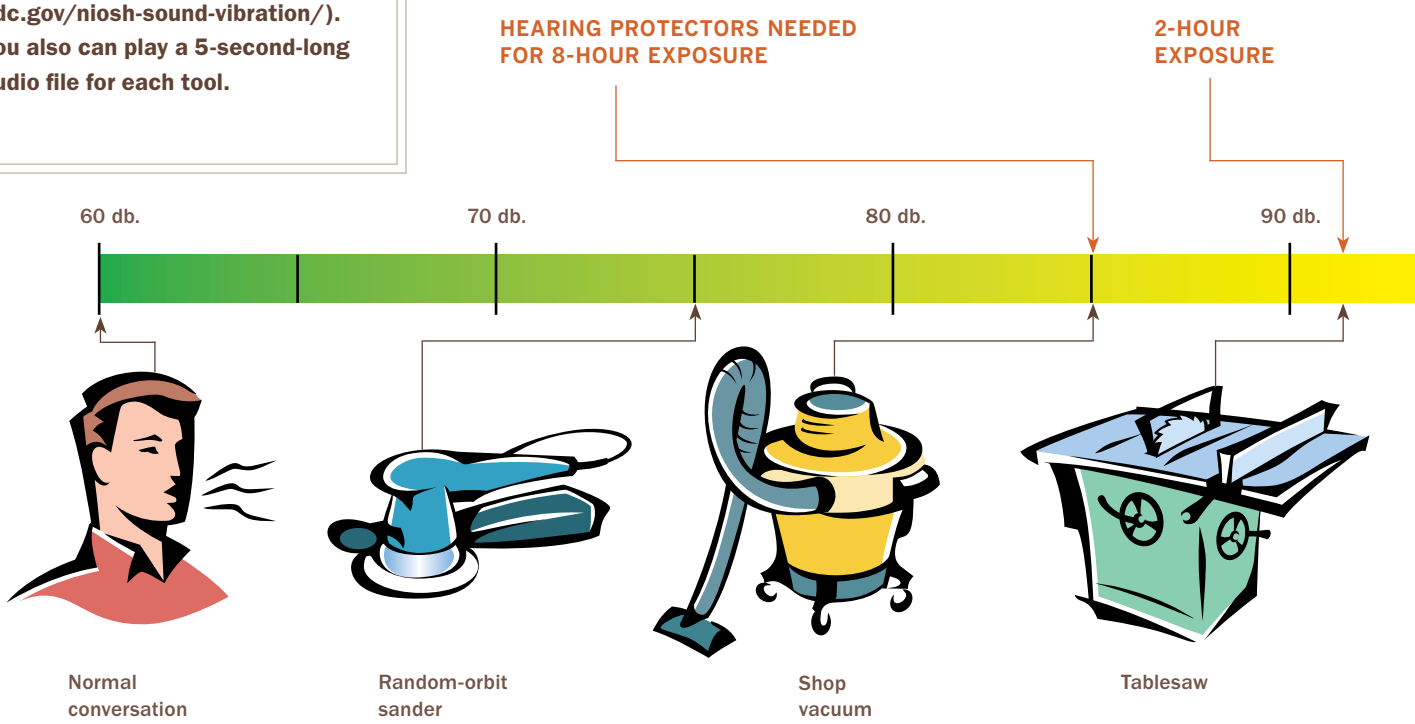

Source: NIOSH data, author measurements

SHORT BANG, LONG DRONE: BOTH BAD.

Pneumatic nailers emit what's known as impulse noises. They last only a fraction of a second, too short for our brains to register the sound as loud. In fact, a nailer can be louder than other shop machines, such as a jointer or a tablesaw.

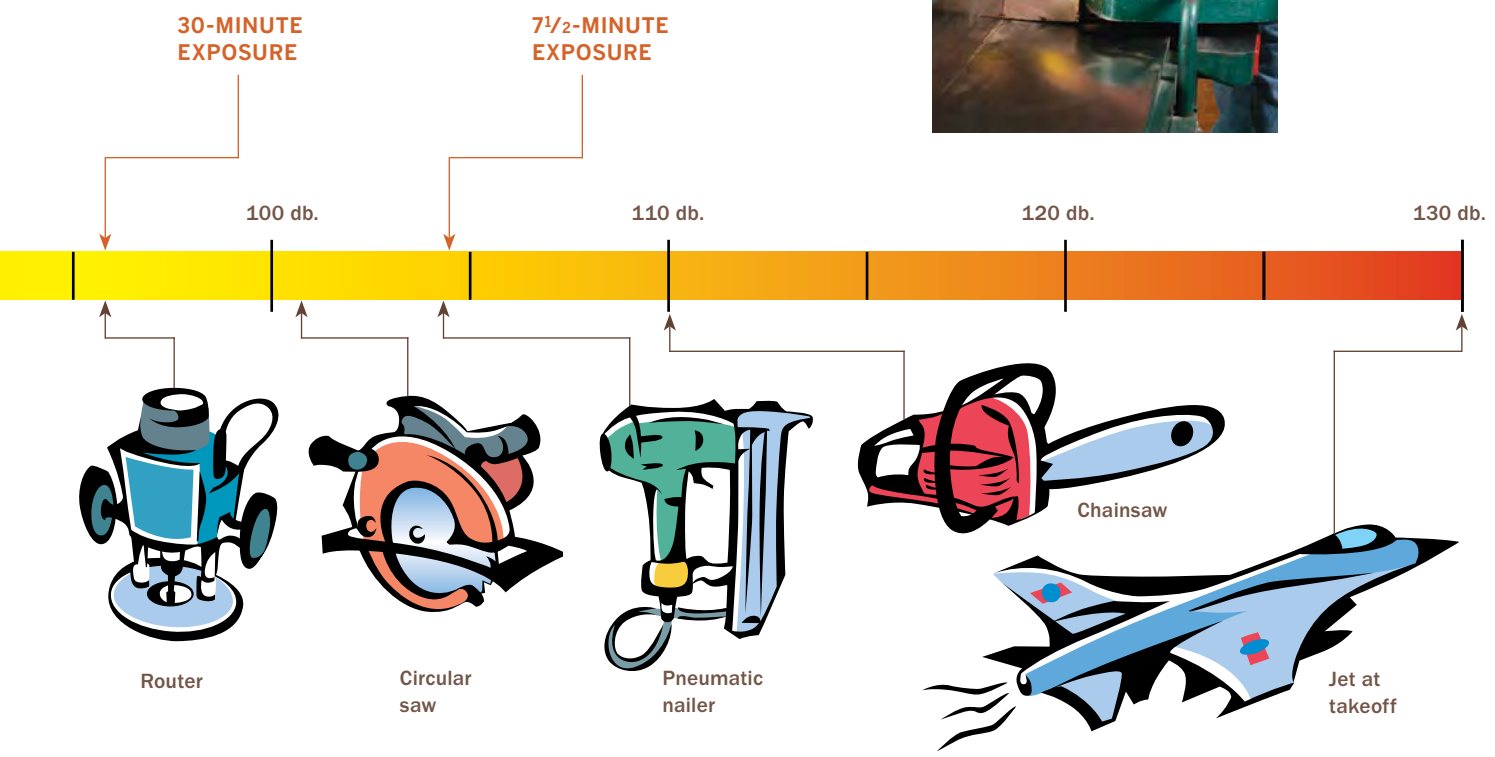

EARPLUGS

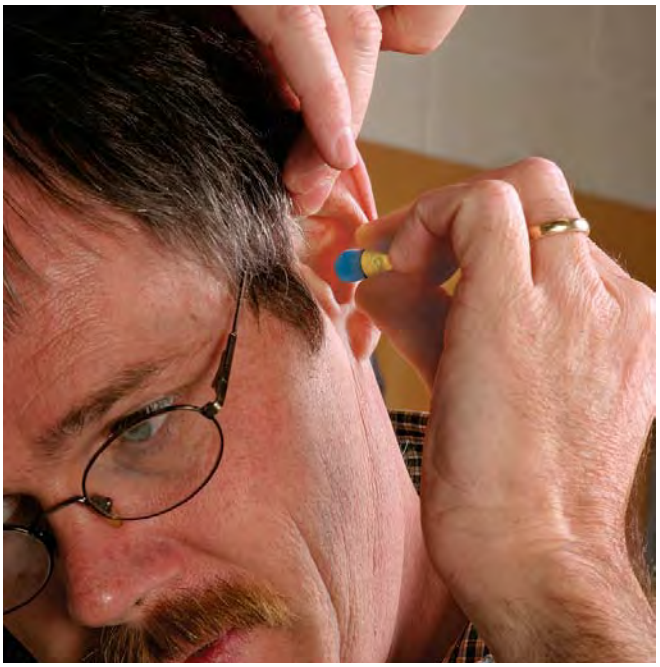

Simple and inexpensive, plugs can provide ample hearing protection. The ones shown here typify new designs that let normal sounds through but block harmful ones. The plug's biggest drawback is difficulty of use. Most are tricky to insert in the ear properly.

sound wave coming toward your ear, which effectively cancels the sound. Some researchers said that noise-canceling headphones work best with steady, constant sounds but are less effective with the relatively short bursts from shop machines.

All plugs and muffs can do the job...

Any hearing protector on the market will cut sound by 10 db. or more. Some claim to reduce sound by 25 db. or more. They're more than adequate for muffling the noise from machines in a home woodshop. In fact, it's pointless to try to figure out which specific hearing protector might actually offer a higher level of protection. Turns out, there's no way to know for sure.

BLAST BUSTERS SHOOTER'S EAR PLUGS

What it does: Reduces ambient noise levels by about 75%, but limits impact noise to 80-85 db.
Panelists' comments: Easy to use if wearing eye protection.
Source: www.earplugstore.com

HOCKS NOISE BRAKERS

What it does: Reduces all sound approximately to the volume of normal speech. Designed so that escaping sound waves cancel dangerous noises.
Panelists' comments: Lets voices through.
Source: www.hocksproducts.com

QUIETEAR

What it does: Reduces sound volume by half, with additional protection above 85 db.
Panelists' comments: Couldn't get them to fit.
Source: www.heartech.co.il

ZEM BY SENSGARD

What it does: Uses specially designed headband to direct sounds away from ears; filters out the most damaging frequencies.
Panelists' comments: Picked up too much ambient noise ("I could hear myself chewing my own gum.") Hard to adjust.
Source: www.zemzone.com

BILSOM ELECTO

What it does: Uses microphone to pick up ambient noise, and has built-in FM/AM radio. Sounds from mic or radio limited to 82 db.
Panelists' comments: Lightweight.
Source: www.earplugstore.com

BILSOM RADIO

What it does: Has built-in FM/AM radio. Radio's loudness limited to 82 db.
Panelists' comments: Good radio, but muffs not as comfortable as some others.
Source: www.earplugstore.com

ELVEX QUIETUNES COM-660

What it does: Has built-in FM/AM radio. Radio's loudness limited to 82-85 db.
Panelists' comments: Radio picked up static from shop machines.
Source: www.elvex.com

LEE VALLEY ELECTRONIC HEARING PROTECTORS

What it does: Uses microphone to pick up ambient noise. Sounds from mic limited to 85 db.
Panelists' comments: Liked ambient noise through microphone. Easy to use with eyeglasses.
Source: www.leevalley.com

MUFFS

Sophisticated new muffs, like those shown here, don't just cover your ears to block noise. Some contain electronics that let you hear some normal sounds but keep the noise at a safe level. Some offer built-in radios for entertainment and to reduce the sense of isolation.

Most hearing protectors carry a Noise Reduction Rating, or NRR. The number, derived from lab tests under ideal conditions, is supposed to indicate how many decibels of protection the product provides. But the lab tests don't track with real-world conditions. Each manufacturer does its own testing under somewhat different conditions, so the NRR can't be used to compare brands. It wasn't surprising that one government audiologist I spoke with joked that NRR actually means "not really relevant."

. . . so comfort and convenience are key

Hearing protectors range from disposable foam plugs that cost about a dollar a pair to electronics-laden earmuffs that sell for close to $200. What's best? Every expert I spoke with offered the same piece of advice: The best hearing protectors are the ones you'll wear regularly. That means you want something comfortable and easy to use.

To gauge the comfort and convenience of some new protectors, I asked several *Fine Woodworking* and *Fine Homebuilding* editors to make informal comparisons. Each person tried four hearing protectors—two earmuffs with built-in radios, microphones, or both and two sets of earplugs. I chose the products based on advice from experts and my own research.

People compared two products at a time, using noisy shop machines for 10-minute stretches. They had to decide whether they preferred one product, based on factors including ease of use, comfort, and whether the wearer still could hear normal sounds. I also asked if they would use the product regularly.

The panelists' favorites

Overall, people preferred earmuffs to plugs. It's simply easier to pop a set of muffs over your ears than to insert plugs every few minutes.

Most of the negative comments about earplugs concerned difficulty with fitting them into the ear. These plugs are only slightly easier to fit than older foam plugs. Yet nearly everyone said they liked a favorite plug or muff well enough to use it regularly.

Our favorite muffs were The Bilsom Radio, the Bilsom Electo (pricey muffs with both microphone and radio), and microphone-enhanced muffs from Lee Valley Tools. The Elvex® QuieTunes were least preferred; several people complained that the radio picked up static from shop machines.

Among earplugs, people said the Hocks Noise Brakers® allowed them to hear normal conversation. At least one person favored the QuietEar and BlastBuster™ plugs; others called them hard to put on. One tester preferred the unique Zem by Sensgard, designed to direct sounds away from the ear.

A Look at Eye Protection

STEVE SCOTT

As beautiful as it might look to you, a woodshop is an unfriendly environment for your eyes.

Sanders kick up clouds of irritating dust. The tablesaw throws sharp chips, while small workpieces can burst into flying shards at the miter saw. The lathe peppers its user with wood chips, and grinders throw sparks and abrasive fragments. Handwork also presents dangers: A chisel and mallet can launch chips like little missiles. Less likely perhaps, but just as dangerous, is a caustic splash from a jostled container of solvent or finish.

According to government estimates, hospitals in 2004 treated about 15,000 eye injuries from tools found in most woodshops. Many of these injuries could have been avoided if the victim had worn an inexpensive set of safety glasses or goggles.

"These are not high-ticket items, compared to saving your sight," said Dr. Larry Jackson, an epidemiologist who studies workplace injuries at the National Institute for Occupational Safety and Health.

Jackson, who helped develop U.S. industry standards for safety glasses, recommends that every woodshop be equipped with all three basic types of safety eyewear—glasses, goggles,

Three lines of defense. Safety experts say there's a need in every woodshop for each of these forms of eye protection: safety glasses for jobs that shoot lightweight chips into the air, goggles to keep heavy dust out of your eyes, and face shields (used with glasses or goggles) to protect your face and repel heavier chips or other projectiles.

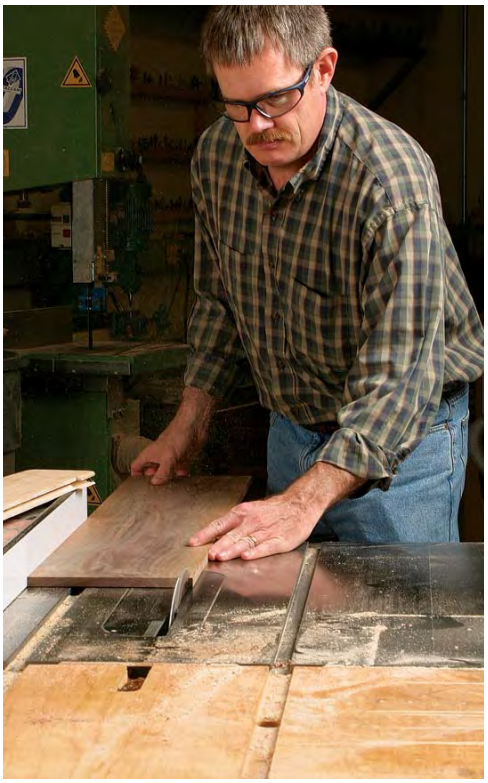

Safety glasses ward off small chips and dust. With impact-resistant lenses and frames and wraparound protection, safety glasses shield your eyes from small flying chips, whether they're launched by a mallet and chisel or by a powerful shop machine. There also are great options for woodworkers with corrected vision.

Good protection isn't costly. The inexpensive Elvex Triad offers no-nonsense eye protection in sporty wraparound frames. The glasses feature a flexible nose bridge and earpieces for added comfort.

The Cadillac. The ESS® ICE 2.4™ offers military level impact resistance and greater visibility. The frameless design doesn't interfere with peripheral vision, a common complaint about some protective eyewear. The military cachet comes at a price, though.

and face shields. Woodworkers should use some type of eye protection at all times in the shop, he says.

No doubt some woodworkers will balk at that suggestion—it's hard to believe that your eyesight is threatened when you're taking shavings with a block plane or laying out dovetails with a marking gauge and a bevel. But it's also hard to argue against a sure way of keeping your eyes safe: making a rigorous habit of wearing the right protective gear. The argument tilts further when you consider how easy it is to find comfortable and effective eye protection.

Every woodworker will strike his or her own balance between convenience and eye safety. Three *Fine Woodworking* editors sized up a broad selection of glasses and goggles, looking for models that offer both protection and comfort. Here's an informal overview of the eyewear that's available with some tips on what to look for.

Safety glasses are a must

Any protective eyewear—glasses or goggles—should meet the American National Safety Institute standard known as Z87.1-2003. This means that the lenses, typically made of tough polycarbonate, won't shatter and the frames won't break when smacked by a ¼-in. BB moving at 150 ft. per second. They must also offer generous side protection to keep dust and flying objects out of the corners of your eyes. The lenses, frames, and packaging should all be stamped with a Z87+ to indicate that they meet this safety standard.

Don't wear glasses?—For the woodworker who doesn't wear glasses or who wears contact lenses, the selection of safety glasses is wide and varied. Most fit and look like lightweight sport sunglasses.

We liked lightweight models from Elvex and Edge Eyewear that had large, wraparound lenses for good peripheral vision. UVEX, Crews, and AO Safety also make suitable and inexpensive models.

To aid in a snug and comfortable fit, some models come with a padded or flexible nose bridge, padding at the browline, and adjustable earpieces.

Plenty of options for glasses wearers—If you wear glasses, you might think they give you adequate eye protection in the shop. They don't.

Your glasses very likely offer no side protection at all, and they probably leave too much room between your brow or cheekbones and the rims of the glasses. Wood-chip projectiles can dart through that gap. Some street glasses also have lenses of glass or acrylic that might not stand up to a direct hit from flying debris.

Safety glasses go a long way toward correcting these flaws. They are designed to fit closely to your brow and cheekbones, and they feature wraparound lenses or side shields to protect the corners of your eyes. The lenses and the frames both are impact resistant.

There are plenty of safety glasses designed to fit over the glasses you already wear. They are sturdy and inexpensive, but the challenge lies in getting a good fit.

Prescription safety glasses can be stylish. Optometrists, vision centers, and online retailers offer plenty of styles for safety frames and prescription lenses that meet industry standards for impact protection. This pair is from Phillips Safety Products.

Glasses for your glasses. Safety eyewear designed to fit over street glasses is a relatively inexpensive way for prescription wearers to protect their eyes in the shop. This pair from Eye Armor offers a snug fit.

Low profile. For folks who don't wear prescription lenses, many goggles offer a streamlined profile. Uvex Spoggles are one example.

Roomy enough to fit over glasses. It's easy to find goggles that fit comfortably over your street glasses. Verdict Goggles by Crews offer indirect air baffles for fog control and splash protection.

Convertible models. Some glasses or goggles can be fitted with inserts that hold prescription optics. Others, like the SG1 from Wiley X™, can be fitted directly with prescription lenses.

Goggles seal out dust. They offer the same impact protection as safety glasses, but safety goggles close all the gaps between your face and the lens with a foam or rubber lining. This full protection is needed when you're filling the air with clouds of fine dust.

Safety frames for prescription lenses range from bland and square to sleek and stylish. There are a few wraparound models, but lenses of this shape cannot be ground to fit some prescriptions.

If you wear contacts, you still need safety glasses or goggles to keep your eyes safe. Some safety experts go further and advise against wearing contacts in environments with a lot of dust or chemical fumes in the air because either of these could become trapped behind the lens and damage your eye. Hard lenses are more likely to trap dust; soft lenses are more vulnerable to chemicals, the experts say. Injury statistics typically don't track contact-lens use, so it's hard to gauge the threat. The safest course may be to always use goggles over contacts or to take the contacts out and wear glasses instead when you're in the shop.

Jackson and others recommend wearing safety glasses for any light-duty shop activity that doesn't involve power tools. For power tools that throw dust and chips at high speed, they recommend stepping up to goggles.

Face shields protect head and neck. A face shield is essential at the lathe, which can spray its user with heavy chips. Flying sparks or disintegrating grinder wheels also are a threat. Be sure to wear safety glasses or goggles underneath; flying debris can ricochet behind the mask.

Goggles provide more comprehensive coverage

Goggles are the most certain way of protecting your eyes from fast-flying debris and heavy floating dust. They're better at this than safety glasses because they completely enclose the eyes, and they're held snug to your face with an elastic head strap. Models with baffled air vents provide the best dust protection and also can protect your eyes against chemical splashes.

For the best field of view, we preferred the full-face models that resemble a diver's mask to the motorcyclist style with separate eyepieces.

Some models, like the goggles you wore in high school chemistry lab, are designed to fit over glasses. Those very goggles, in fact, or ones much like them, are a great and inexpensive way to protect your eyes in the shop. But with their rubbery, scuba-mask feel, you might not want to wear them for long. A roomy, updated version from Crews has baffled air vents and a foam lining. It's more comfortable but still bulky.

Updated version of the basic shield. Jackson and Uvex offer two slightly different takes on the familiar face-shield design. Jackson's The Shield mates a set of safety goggles with an impact-resistant shield for the lower face. The Bionic Face Shield by Uvex provides extended coverage for the chin and the top of the head.

Sources

Safety eyewear is available at home centers and online. Prescription safety glasses can be found at your local optometrist.

www.safetyglassesusa.com
www.woodcraft.com
www.phillips-safety.com
www.discountsafetygear.com
www.grainger.com

When the heavy chips fly, reach for a face shield

Any task in which the tool forcefully throws large wood chips or other heavy flying particles (wood turning, for instance) calls for a face shield.

A face shield consists of a large, clear visor mounted on a piece of adjustable headgear to flip up and down like a welder's mask. Inexpensive models are available from both Woodcraft and Lee Valley Tools. Just like its name implies, a face shield is designed to prevent flying objects from striking the wearer in the face.

It's easy to feel like your eyes are well protected behind this clear shell, but safety experts say otherwise. Because a face shield is more or less open at the bottom, wood chips or other projectiles could get past it and into your eye. For that reason, the experts say, you should always wear safety glasses or goggles under a face shield. A face shield for your face, glasses or goggles for your eyes.

Metric Equivalents

INCHES	CENTIMETERS	MILLIMETERS	INCHES	CENTIMETERS	MILLIMETERS
⅛	0.3	3	13	33.0	330
¼	0.6	6	14	35.6	356
⅜	1.0	10	15	38.1	381
½	1.3	13	16	40.6	406
⅝	1.6	16	17	43.2	432
¾	1.9	19	18	45.7	457
⅞	2.2	22	19	48.3	483
1	2.5	25	20	50.8	508
1¼	3.2	32	21	53.3	533
1½	3.8	38	22	55.9	559
1¾	4.4	44	23	58.4	584
2	5.1	51	24	61	610
2½	6.4	64	25	63.5	635
3	7.6	76	26	66.0	660
3½	8.9	89	27	68.6	686
4	10.2	102	28	71.7	717
4½	11.4	114	29	73.7	737
5	12.7	127	30	76.2	762
6	15.2	152	31	78.7	787
7	17.8	178	32	81.3	813
8	20.3	203	33	83.8	838
9	22.9	229	34	86.4	864
10	25.4	254	35	88.9	889
11	27.9	279	36	91.4	914
12	30.5	305			

Contributors

Andy Beasley lives in Colorado Springs, CO.

Asa Christiana is the editor of *Fine Woodworking*.

Scott Gibson, a contributing writer to *Fine Homebuilding*, lives in Maine.

Chris Gochnour, the owner of the Joiners Bench in Murray, UT , has been building fine furniture for the past 20 years. He teaches furniture making at Salt Lake Community College, the Traditional Building Skill Institute at Snow College, and the Marc Adams School of Woodworking. Visit him online at www.chrisgochnour.com.

Garrett Hack, a professional furniture maker and woodworking instructor, is a contributing editor to *Fine Woodworking*.

David Heim is a former associate editor at *Fine Woodworking*. He now divides his time between freelance editing, woodturning, and SketchUp artistry at his home in Oxford, CT.

Nancy McCoy is a certified lighting designer in Novato, CA. Her husband, **Peter Judge**, is an avid woodworker.

Thomas McKenna is *Fine Woodworking's* managing editor.

Jeff Miller is a furniture designer, craftsman, teacher, and author of woodworking books and a frequent contributor to *Fine Woodworking* and other publications. Jeff's furniture has been shown in galleries and shows nationwide and has won numerous awards. His furniture is in the Decorative Arts Collection of the Chicago History Museum. Visit him online at www.furnituremaking.com.

Bill Peck is shop manager for *Fine Woodworking*.

Michael Pekovich is *Fine Woodworking's* art director.

Clifford A. Popejoy is a licensed electrical contractor and occasional woodworker in Sacramento, CA.

Michael Puryear is a designer/furnituremaker practicing his craft in the Catskills of New York. Visit him online at www.michaelpuryear.com.

Bruce Ryden is a retired fire-safety inspector.

Steve Scott is a *Fine Woodworking* associate editor.

Stelios L.A. Stavrinides AKA Steliart is a graphic Web designer and woodworker in Nicosia, Cyprus.

Patrick Sullivan is an internal medicine specialist with extensive emergency room experience. Now retired from his medical practice, he has more time for woodworking.

Matthew Teague builds furniture in Nashville, TN, and is the editor of *Popular Woodworking Magazine*.

John White, an experienced designer, cabinetmaker, and machinist, managed the *Fine Woodworking* woodshop for almost a decade. Now he splits his time between writing, teaching, designing, and consulting from his home in Rochester, VT. You can reach him by email at zensmithvt@gmail.com.

Credits

All photos are courtesy of *Fine Woodworking* magazine © The Taunton Press, Inc., except as noted below:

Front cover: Main photo by Patrick McCombe, left photos top to bottom: Michael Pekovich and Tom Begnal. Back cover from top to bottom: Thomas McKenna, Matt Kenney, and John Tetreault.

The articles in this book appeared in the following issues of *Fine Woodworking*:

pp. 4-12: 15 Tips for Basement Workshops by Thomas McKenna, issue 202. Photos by staff except for photos p. 7 and p. 12 by Robert Beason, top photo p. 8 by Art Mulder, bottom photo p. 8, top photo p. 9, and top photo p. 11 by Dave Verstraete, middle photo p. 8 and bottom photo p. 11 by Serge Duclos, and photo p. 10 by Christopher Walvoord. Drawing pp. 4-5 by John Hartman and drawing p. 7 by Vince Babak.

pp. 13-24: Turn Your Garage Into a Real Workshop by Michael Pekovich, issue 216. Photos by Rachel Barclay except photos p. 13 and p. 18 by Patrick McCombe. Drawings by John Hartman.

pp. 25-37: Smart Garage Workshop, From the Ground Up by Matthew Teague, issue 195. Photos by Asa Christiana except for photo p. 28 and all photos pp. 26-27 by Matthew Teague except bottom photo p. 27 by James Lennon. Drawings by Toby Welles @ Design Core.

pp. 38-43: Shop Design: Think Your Shop is Small? Think Again by Stelios L.A. Stavrinides, issue 216. Photos by Stelios Athrakiotis. SketchUp drawings by author; final renderings by Dave Richards.

pp. 44-51: Wiring a Workshop by Clifford A. Popejoy, issue 188. Photos by Kelly J. Dunton except for top photo p. 47 by Rodney Diaz, center photo p. 47 by Mark Schofield, and bottom photo p. 47 by Tom Begnal. Drawings by Brian Jensen.

pp. 52-61: Let There Be Light by Nancy McCoy and Peter Judge, issue 209. Photos by Michael Pekovich except for photos pp. 58-59 by Kelly J. Dunton. Drawings by Michael Pekovich.

pp. 62-67: Treat Your Feet by Steve Scott, issue 216. Photos by Kelly J. Dunton. Drawing by *Fine Woodworking* staff.

pp. 68-73: Low-Cost Shop Floor by Scott Gibson, issue 160. Photos by Tim Sams. Drawings by Vince Babak.

pp. 74-85: A Revolution in Dust Collection by Asa Christiana, issue 223. Photos by Michael Pekovich. Drawings by Stephen Hutchings.

pp. 86-97: A Workbench 30 Years in the Making by Garrett Hack, issue 209. Photos by Thomas McKenna. Drawings by David Richards.

pp. 98-109: The Wired Workbench by John White, issue 223. Photos by Matt Kenney. Drawings by John Hartman.

pp. 110-115: Making Sense of Vises by Garrett Hack, issue 191. Photos by Steve Scott. Drawings by John Hartman.

pp. 116-124: Your Miter Saw Needs a Stand by John White, issue 209. Photos by *Fine Woodworking* staff. Drawings by Jim Richey.

pp. 125-136: Best-Ever Outfeed Table by John White, issue 202. Photos by Matt Kenney except for photos p. 126 by John Tetreault. Drawings by Bob La Pointe.

pp. 137-145: Pivoting Plywood Cart by Michael Puryear, issue 223. Photos by Anissa Kapsales. Drawings by Jim Richey.

pp. 146-157: House Your Tools in High Style by Chris Gochnour, issue 223. Photos by Thomas McKenna. Drawings by Bob La Pointe.

pp. 158-163: Keep Planes Close at Hand by Chris Gochnour, issue 209. Photos by Thomas McKenna. Drawings by Bob La Pointe.

pp. 164-167: Divide and Conquer by Michael Pekovich, issue 223. Photos by Steve Scott.

pp. 168-173: Lumber Storage Solutions by Andy Beasley, issue 181. Photos by Tom Begnal. Drawings by Jim Richey.

pp. 174-181: Fire Safety in the Shop by Bruce Ryden, issue 174. Photos by William Duckworth except for photo p. 175 by John Hamel courtesy of Ellis Wallentine and photos p. 176, middle photo p. 178, and top and bottom photos p. 179 by Rodney Diaz. Drawing by Vince Babak.

pp. 182-193: Cutting-Edge First Aid by Patrick Sullivan, issue 216. Photos by John Tetreault. Drawings by Christopher Mills.

pp. 194-200: Protect Yourself from Wood Dust by Jeff Miller, issue 201. Photos by Matt Kenney. Drawings by John Tetreault.

pp. 201-206: Sound Advice by David Heim, issue 189. Photos by David Heim except for top photo pp. 202-203 by Kelly J. Dunton. Drawings by Stephen Hutchings.

pp. 207-212: A New Look at Eye Protection by Steve Scott, issue 187. Photos by Rodney Diaz except for the product shots by Kelly J. Dunton.

Index

G

H

I

J

K

L

M

W

If you like this book, you'll love *Fine Woodworking*.

Read *Fine Woodworking* Magazine:

Get seven issues, including our annual *Tools & Shops* issue, plus FREE iPad digital access. Packed with trusted expertise, every issue helps build your skills as you build beautiful, enduring projects.

Subscribe today at:

FineWoodworking.com/4Sub

Discover our *Fine Woodworking* Online Store:

It's your destination for premium resources from America's best craftsmen: how-to books, DVDs, project plans, special interest publications, and more.

Visit today at:

FineWoodworking.com/4More

Get our FREE *Fine Woodworking* eNewsletter:

Improve your skills, find new project ideas, and enjoy free tips and advice from *Fine Woodworking* editors.

Sign up, it's free:

FineWoodworking.com/4Newsletter

Become a FineWoodworking.com member

Join to enjoy unlimited access to premium content and exclusive benefits, including: 1,400 in-depth articles, over 400 videos from top experts, digital issues, monthly giveaways, contests, special offers, and more.

Discover more information online:

FineWoodworking.com/4Join

CRAFTS & HOBBIES

Design a great woodworking shop in any space

Every woodworker needs a place to work. And with this guide from the editors of *Fine Woodworking*, you'll discover how to get the most out of that space, be it a basement, a garage, or even a parking spot. Learn invaluable tips on how to get organized with smart storage projects, how to work safely with the right dust collection system, how to complete work faster with smart shop accessories, and, most important, how to stay safe while doing it. With *Fine Woodworking Best Workshops* by your side, you'll be able to create a shop that is comfortable, safe...and productive.

LEARN HOW TO:

- **Add wiring and lighting to your existing shop**
- **Store your tools in high style**
- **Protect yourself from wood dust**
- **Install a low-cost wood floor**
- **Store and transport lumber with ease**
- **Build a versatile outfeed table**

ALSO AVAILABLE

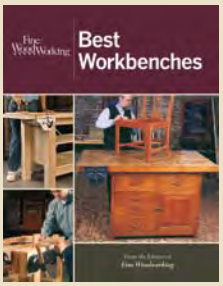

Look for other Taunton Press books wherever books are sold or visit our website at www.tauntonstore.com.

THE TAUNTON PRESS
63 South Main Street, P.O. Box 5506
Newtown, CT 06470-5506
www.taunton.com

The Taunton Press
Inspiration for hands-on living®

Visit www.finewoodworking.com, the single best source of woodworking ideas and information anywhere, to learn about other Taunton Press woodworking books and *Fine Woodworking* magazine.

Taunton Product #077682