THE BEST OF Fine WoodWorking

workshop solutions volume 2

Four articles for you to enjoy:

- Space-Saving Ideas for a Small Shop
- Quik-to-Make Tool Cabinet
- Stowe-and-Go Router Table
- Best-Ever Outfeed Table

Smart Shop in a One-Car Garage

Space-saving solutions for a small work area

BY MATTHEW TEAGUE

Tales of bad shops are a woodworker's war stories. After living in five houses in seven years, I have plenty of them to tell: ladders under closeted trapdoors that descended into windowless basements, ceilings that were only an inch taller than I am when I stand barefoot, abandoned radiators, wasp nests, snow, water—good Lord, the water—and a hole in the middle of one shop floor (about 2 ft. in diameter and 2 ft. deep) just behind the infeed side of my tablesaw. Oh, yes, I could tell you some stories. But that's not my point. My point is that when I moved into a rented house with a one-car garage—9 ft. wide and 18 ft. long—most of my coworkers wondered how I would fit a shop into such a tight space. But after the shops I've endured, I felt like I'd finally arrived.

I spent a lot of time planning to condense workspaces and to make sure that machines work efficiently with one another, and I found quick and simple solutions for storage. I think I've turned the 160-sq.-ft. garage into a smoothly running shop; it's just the kind of place where I want to spend a Saturday or unwind after a day at the office. What's more, when I move, the shop can go with me; everything simply lifts off the walls or rolls out the doors.

A garage transformed

A few months ago, the garage my shop was to be housed in had bare stud walls and one electrical outlet, stored a motorcycle and was littered with enough garden tools to dig a new sea. Luckily, my roommate, who owns the house, was amenable to revamping the space, provided that I pitch in with some of the work. He wanted insulated walls, electricity and wide barn doors on the front—or at least as wide as possible on a 9-ft. run of wall. Renovating the garage would be a hefty task, and I had to do it fast. I had promised my future in-laws a dining set, and if they had to wait much longer, I feared they would take their daughter back.

While I desperately needed a good workspace, I had to remember that I only rent the house. I didn't want my shelving and workstations to be built in. I wanted to be able to lift them off the walls and move them out when I find and buy Connecticut's affordable house. And I didn't want to sink a fortune into cabinets—it's a workshop, after all, and what comes out of the shop is far more important than what goes in. I needed a shop that was well thought out and engineered for a smooth workflow, but not one that was overbuilt. I forgot about all of the garbage that littered the little garage, and started planning on a clean sheet of paper.

Mapping out the territory

Fitting the major machines—tablesaw, jointer, planer, bandsaw, router table, drill press and chopsaw—into a room designed to hold a car (a tiny 1920s Model A, at that) is about as difficult as it sounds. I started on graph paper with paper cutouts of all of my tools. Everything had to be drawn to scale because half a foot in such a tight spot could make or break the shop. As in most shops, large stationary tools are key, but they also demand the most space, so the tablesaw seemed a good place to start.

As soon as I put pencil to paper, I saw that I was going to have to forgo my wide 52-in. Biesemeyer fence—there simply wasn't room. I downgraded to a shorter fence by changing out the rails, which at this point only meant lopping off the end of my tablesaw

Photos: Michael Pekovich

THINKING BIG IN A SMALL SPACE

Thoughtful layout makes this small shop seem bigger. All of the major machines are stored and fully functional in only 160 sq. ft.

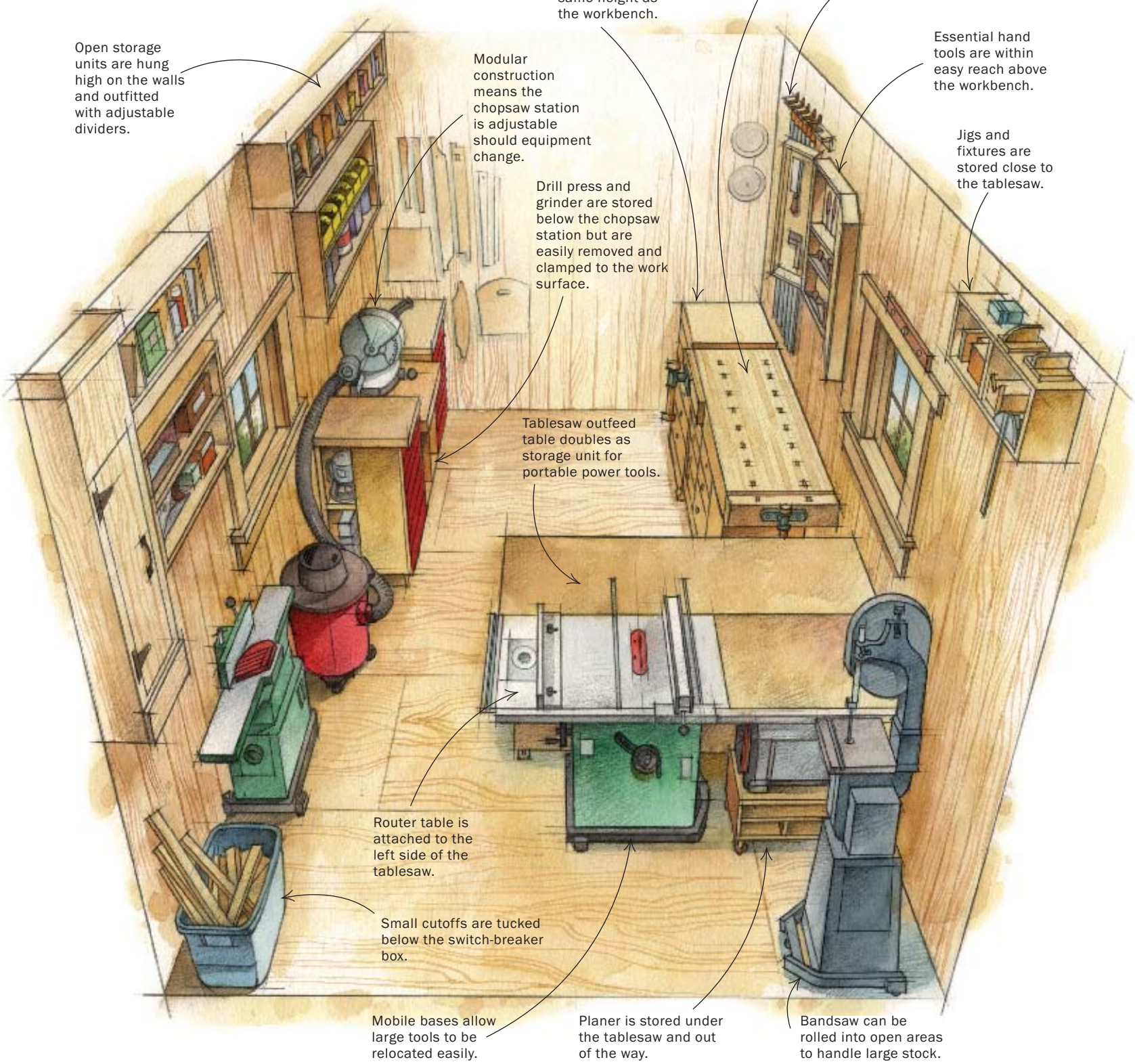

Drawings: Brian Jensen

A well-thought-out corner of the shop. *The chopsaw station not only provides good outfeed support for the saw, but it also stores the grinder and the drill press and houses two banks of drawers.*

MULTIPURPOSE CHOPSAW STATION

Drawers are like clamps—you can never have enough. *Metal drawers slide in sawkerfs in the carcase. Hardware and fasteners are stored in watchmaker's cases. Drawers for cutting tools are padded.*

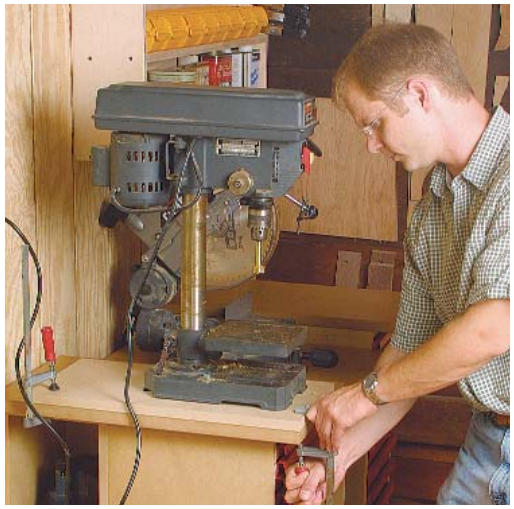

A portable workstation. *The drill press and grinder are both stored below the chopsaw but are easily removed and clamped to the work surface.*

cutout with scissors. I soon saw that large tools had to be mobile; if I left open floor space, any tool could be pulled out easily and put to use. There still were a few wrinkles—like where my router table would go and how I could consolidate my grinder, chopsaw and drill press into one smooth-running workstation—but after a little thinking and shopping around, I solved those problems, too.

I also kept an eye on the horizontal arrangement of tools and workstations, making sure that the outfeed from certain tools—like my tablesaw and jointer—wouldn't be hindered by workbenches or tabletops. After a few more hours of moving around the cutouts and positioning the major machines, I started thinking about storage space and drawing quick sketches of the outfeed situation. In the end, I came up with an arrangement that housed the major tools in just about 80 sq. ft—about half the square footage of the entire space. It was time to run electricity and build the walls.

After cleaning the garage of all its old tools and odds and ends, my roommate and I hired an electrician pal to wire the space. We positioned all of the outlets 44 in. up from the floor—just above bench height—and ran them every 4 ft. We also dropped in four 220-volt outlets conveniently located to reach the beefier machines.

We insulated the walls and hung T-111 siding, which is stronger than drywall and does a better job of holding tool cabinets. The light color of the siding opened up the space, and the rough wood surfaces gave the shop a warm, inviting feel. We then built and hung the barn doors, which took only a weekend to accomplish.

The existing wood floor in the garage would have been nice on the feet, but it was too old and uneven to allow my heavy mobile tools to move easily. We laid down plywood flooring over the existing wood floor and covered it with a few coats of water-based polyurethane.

I have to admit I was shocked that everything worked just as it had on paper. Now I was ready to roll in the machines.

Large tools rest on mobile bases

My tablesaw sits approximately 4 ft. inside the barn doors, leaving enough space on the left side of the saw for my jointer to

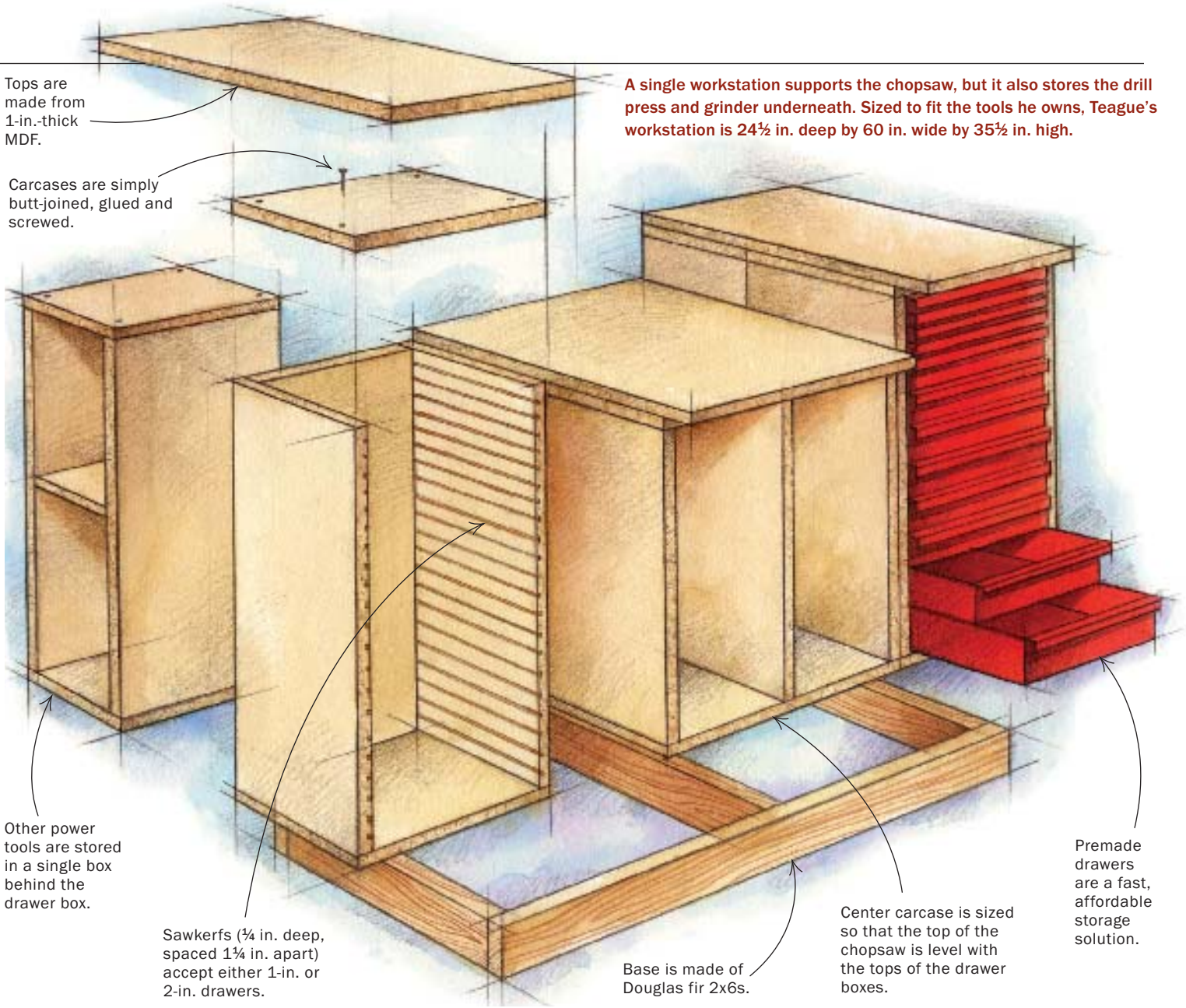

A single workstation supports the chopsaw, but it also stores the drill press and grinder underneath. Sized to fit the tools he owns, Teague's workstation is 24½ in. deep by 60 in. wide by 35½ in. high.

Workstation assembles easily

Set the boxes in place. *The main carcase is centered on the base and screwed into place.*

Keep the carcases flush and secure. *Clamps hold the drawer box in place while it is screwed to both the base and the center carcase.*

Exploit every inch. *Storage boxes are set behind the drawer boxes and screwed in place.*

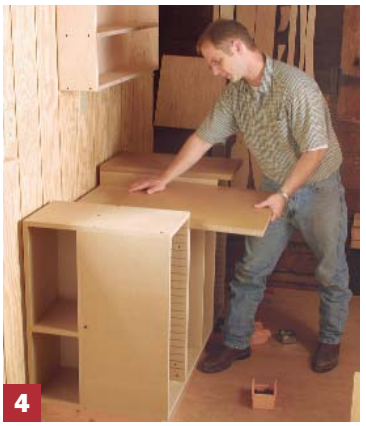

Use a thick top. *The 1-in.-thick MDF is coated with a few washcoats of shellac and will stand up to heavy work.*

stand against the opposite wall. And because I put the jointer on a mobile base, I can move it around if I need to joint especially long boards. My small lunchbox planer, which always has worked wonderfully for me, was relegated to the cubbyhole below the right-hand side of my tablesaw. It saves floor space, but because the planer is light and kept on a shopmade mobile base, its usefulness is not limited.

One big hiccup always had been my router table. It made sense to save space by housing the router table in the tablesaw, but most models mount on the right side of the saw—a setup I'd never been happy with. And with the right side of the saw against the wall, where it clearly had to go, I couldn't stand in front of the fence when routing—doing otherwise always had seemed unsafe. Still, a stand-alone router table was going to take up more room than I had to spare. Browsing through catalogs and the Internet, I found what is the only left-mounted router table that I know of; it's made by Bench Dog (800-786-8902; www.benchdog.com). Although my choice meant losing 3 in. between the tablesaw and the jointer, I still had plenty of working space. Plus, I was able to get rid of my free-standing router table altogether.

The left-mounted router table works great now, but because my tablesaw table is larger than average—even for a cabinet saw—I had to redrill a few holes in the top of the tablesaw and install spacer blocks to make the router table fit. But the afternoon's work has proven well worth it. Not only does the table save space, but it also works better than any free-standing router table I've ever had. I dropped in a router lift (*FWW* #155, pp. 56-61) to make it even more user friendly. Now I can change router bits topside with a quick-action wrench, saving both time and hassle.

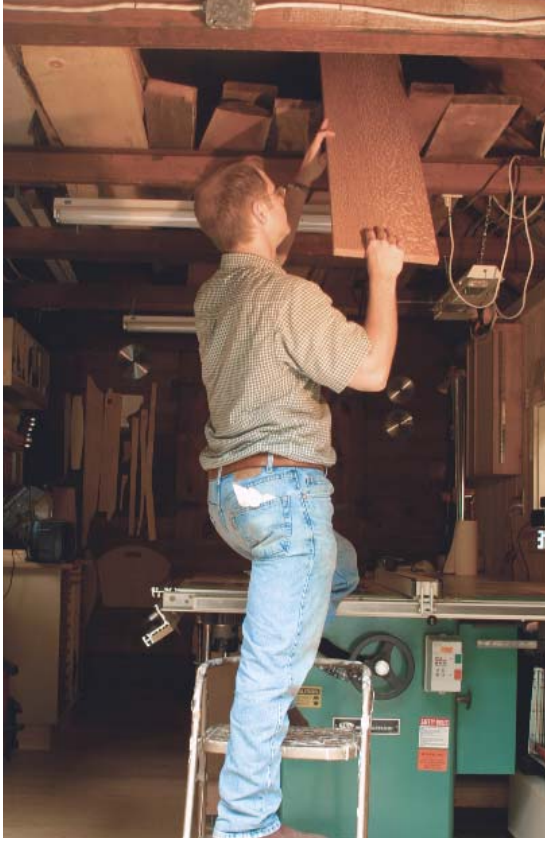

A place for everything. *Space above the rafters is used for storing—and even drying—lumber.*

As planned, the bandsaw rolled into the front corner of my shop, just behind the tablesaw. It is close enough to the doors that I am able to roll it out and use the open doorway as outfeed space as needed. But this is only in a pinch. For most of my woodworking—chairs, small tables and chests of drawers—the bandsaw has plenty of room just where it is.

This arrangement took care of the major stationary tools, and I still had two long walls for the chopsaw station and the workbench. I ended up designing and building a modular chopsaw station that houses not only my chopsaw but also my drill press and grinder. It holds a bank of ready-made drawers and leaves a few cubbyholes in back to store routers and such.

Using the tablesaw's outfeed table as storage for power tools gives me plenty of open floor space, while exposed rafters work

HAVE WHEELS, WILL TRAVEL

Buy a mobile base. *Storing the bandsaw and jointer on mobile bases allows Teague to pull them out into the open when he has to handle especially long stock.*

Or make one yourself. *Teague's planer base is nothing more than an MDF box with locking casters screwed to the bottom, and it includes shelves as well.*

well as lumber racks. Once the major machines were in place, the rest of the shop almost designed itself.

Condensed work areas

One key to working in a small shop is to condense your workspaces for both economy and ease. I wound up building units out of medium-density fiberboard (MDF) to handle tablesaw outfeed, as well as my chopsaw, grinder and drill press.

While I would have loved a nice, long tablesaw-outfeed table that could handle large sheet goods, there was hardly room. When working with plywood or MDF, I cut the sheets to rough size with a circular saw in my driveway, then trim them at the tablesaw. Ninety-nine percent of the time, the 2-ft.-wide outfeed table provides all of the support I need for the tablesaw. And if I'm cutting large sheet goods, the workbench is positioned to serve as outfeed support. But I had to get more out of the outfeed table than just outfeed support—I needed a place to store handheld power tools and to serve as another work surface for assembly and other tasks.

The outfeed table is a heavy setup, but I needed the heft to make it sturdy. I assembled the table with knockdown fasteners so that the whole workstation could be disassembled for easy transport when I move. I installed a 1-in.-thick MDF top and covered it with a few coats of shellac—not only does the shellac provide a moisture barrier, but it also makes the MDF less prone to scratches. Four 4-in. lag bolts serve as levelers, making it easy to bring the outfeed table flush to the tablesaw.

It would have been nice to have a sliding compound-miter saw, a floor-standing drill press and a permanent grinding station that was always ready to go, but working in a small shop meant I had to accept some sacrifices. And because I was working on a budget, I couldn't upgrade all of my tools—not to mention that my tools had always worked well for me.

After a bit of head scratching, I devised a way to combine my chopsaw, drill press and grinder into one workstation that takes up only a small footprint and works smoothly. I didn't work out all of the dimensions ahead of time; I just built it box by box, sized to fit each tool. Almost accidentally, it worked out better than I'd hoped. Because it's built as a modular unit, the workstation is extremely flexible. Should I replace any of my current tools, I simply can change out one of the units and replace it with a new and correctly proportioned carcase.

Well-organized storage

The bank of drawers on my chopsaw station provides more than 30 sq. ft. of storage space. I ordered premade metal drawers (around $4 apiece) from Lee Valley (800-267-8735; www.leevalley.com). Installation was simple. All I had to do was build a box and run sawkerfs every 1¼ in.; the 1-in. and 2-in.-deep drawers slide into place and can be rearranged however I like. The drawer-box carcase became the basis around which I built my chopsaw stand.

One of the best parts of working for this magazine is that I get to visit the best workshops in the world, and the good ideas I see are

ONE TABLE, MANY USES

The outfeed table not only provides support for the tablesaw, but it also stores power tools and other materials. The shop vacuum can be used for dust collection at the tablesaw. The 1-in.-thick MDF top also serves as a sturdy work surface for assembly. Lag bolts in the base make it easy to level the table.

Condense workspaces. *A router table that mounts on the left side of the tablesaw saves valuable floor space and still leaves plenty of room for moving around.*

Making it work. *A well-planned space—even if it's small—allows plenty of room for building furniture. Here, Teague works on a set of cherry dining chairs.*

abundant. While visiting Tony O'Malley, a woodworker in Emmaus, Pa., I was struck by the efficiency and cleverness of his storage space. He had built storage units all around the top of his shop wall similar to the MDF units I had installed above my bandsaw, jointer and chopsaw station.

I built them using an ultralight MDF rather than the weightier MDF of my outfeed table—the weight helps in that situation, but it isn't necessary on the wall. The light stuff is also much more pleasant to use. As O'Malley did on his shelves, I ran dadoes in the top and bottom to make the storage units adjustable and adaptable: By rearranging the ¼-in.-thick dividers, I can design separate cubbyholes for each tool.

Above both the chopsaw station and jointer, I screwed simple plywood shelves to the wall. The shelves hold screws, router and drill bits and help keep everything organized. Staying organized is key to working in any shop—I hate floundering around a sloppy space trying to locate a bit or a tool. And for space reasons, organization is even more important in a small shop. I used watchmaker's cases from Lee Valley to hold screws and other hardware (see the top right photo on p. 46). With just a glance, I can find what I'm looking for.

Watch it on the web

For a shop tour and more storage ideas, go to www.finewoodworking.com.

Where MDF falls short

I was bent on using quick methods and economical materials, but when it came to my workbench, it was hard to accept compromise. I recently inherited an old workbench top from a friend, who had inherited it from another friend, who'd been given the bench by a boatbuilding pal many years ago. It is exactly the kind of workbench that makes you want to be a woodworker—an end vise, a front vise, a tail vise and a heavy maple top scarred with history. I built a maple base for it and installed the same drawer boxes I'd used on an earlier bench. I don't think I could sleep at night if I stored my favorite chisels and planes in an MDF box above the bench. Instead, I made a simple cherry wall unit with two box doors. I picked my favorite and most necessary hand tools and outfitted the box with custom tool holders. It was quick work, but the unit serves all of my needs.

Though the garage required a fair amount of renovation, the shop came together quickly and works better than I ever would have imagined. A good workshop should be simple and sensible but designed with an eye toward efficiency. A sensible shop makes you work better and smarter. The best part is that when I move, the shop can be disassembled to move with me. □

Matthew Teague is managing editor.

Credit Here

Quick-to-Make Tool Cabinet

Attractive design stores all your tools in a small space

BY JAN ZOLTOWSKI

After a career of 35 years I had collected a substantial number of woodworking tools and I finally decided that they deserved a proper home. I set out to create a cabinet capable of holding my tools in a relatively small but accessible area. The result is home to well over 300 tools, yet covers only about 12 sq. ft. of wall.

I deliberately dedicated this cabinet to hand tools to keep them apart from dusty power tools, but the design can be modified easily to accommodate small power tools as well. Think twice before making the cabinet smaller; even if your tool collection would look lost in a cabinet of this size, it's nice to have space to grow into.

No wasted space

The inside surfaces of the main doors hold thin tools such as chisels and screwdrivers. Inside the cabinet, working down from the top, the upper shelf seats larger handplanes; the middle section has a pair of internal doors that support tools on both sides (increasing the hanging area by 40%) and that open to reveal additional space for saws and marking tools. The lower area is divided into cubbyholes for smoothing planes and other specialty planes, while six small drawers in the bottom hold smaller tools such as block planes, drill bits, and router bits.

The cabinet hangs on upper and lower pairs of French cleats. Behind the cabinet, in the space between the cleats, is a place to hold a carpenter's square on one side, and three panel saws, held securely by means of the friction of their teeth, on

A brief tour

Drawers for small objects. *The six drawers at the bottom of the cabinet hold small objects such as block planes.*

Hinged panels add storage. *Tools hang on both sides, adding 40% to the cabinet's hanging area.*

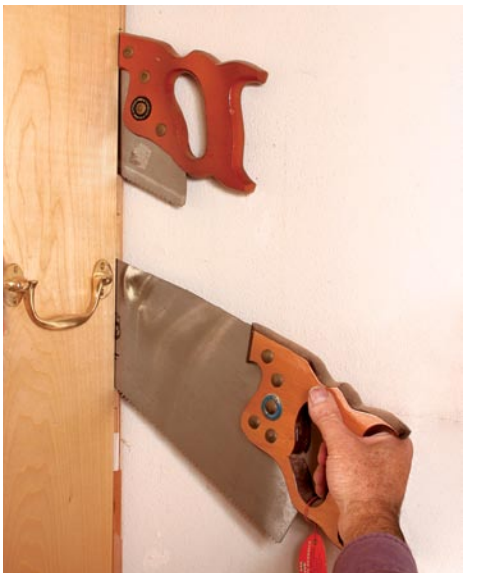

Storage behind the cabinet. *A carpenter's square on one side and three panel saws on the other fit into slots in the back of the cabinet.*

A COMPACT CABINET WITH AMPLE CAPACITY

The cabinet is made almost entirely from birch plywood, which gives dimensional stability at a budget price. The main carcase is ¾-in.-thick plywood connected with finger joints.

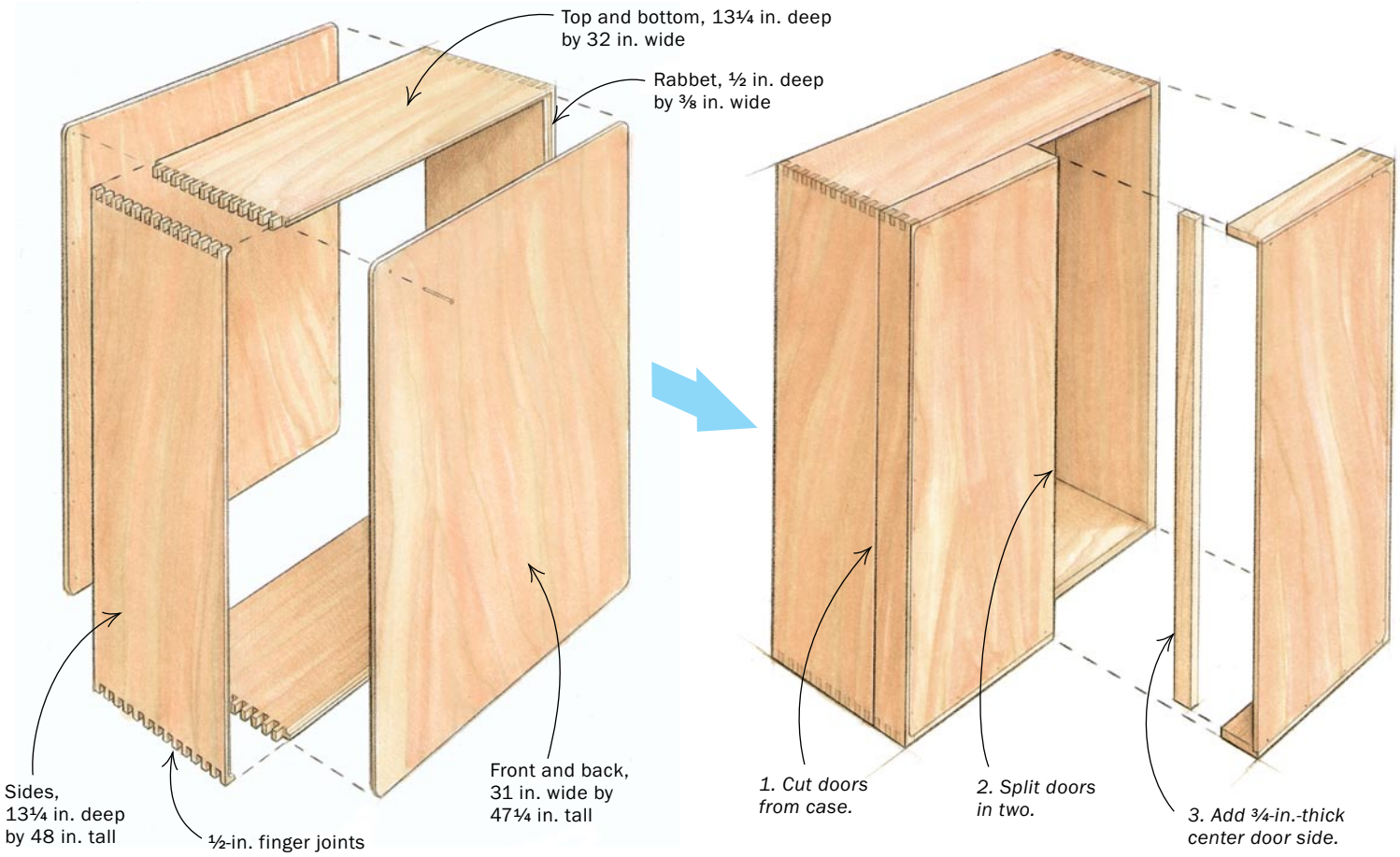

Construct the carcase

Build a big box. *The main body of the cabinet is connected at each corner with ½-in. finger joints cut on the tablesaw (left). Rabbet the front and rear for the panels. Glue and nail the front panel (above), but attach the rear with screws for interior access.*

Photos: Mark Schofield; drawings: Bob La Pointe

the other. The cabinet holds all these tools within easy reach, and every blade and tooth stays sharp and protected.

Construction starts with a single box

I built my cabinet out of Baltic-birch plywood. Not only is it more economical than solid lumber, but it eliminates problems such as stuck drawers from dimensional changes caused by the high humidity in the Northwest. The body of the cabinet starts out as one large box with the sides made from ¾-in.-thick plywood. Join the corners with ½-in. finger or box joints (for more on this method, see "A Lesson in Box Joints," *FWW* #181, p. 84, or "Box Joints on the Tablesaw," *FWW* #148, pp. 60-63).

Rout a ½-in.-deep by ⅜-in.-wide rabbet around the inside front and back edges to accept panels of ½-in.-thick plywood. The front of the cabinet is attached with glue and nails, but the back is attached with screws only to allow access during later construction.

Next, cut off approximately the front third of the box to form what will become the main doors. On the tablesaw, using the rip fence as a guide, cut through both ends of the box. Attach a thin piece of scrap plywood to each end by nailing it on both sides of the cut. This is to keep the two parts of the box attached while cutting through the long sides on the tablesaw.

Cut away the door section. *With the front and rear panels installed, cut away the front quarter of the box to form the main doors. Cut the short sides first, and then tack a batten across the cut to hold the section in place while cutting the long sides.*

While at the saw, cut the newly removed front section of the cabinet in half to form the two main doors. When this is done, attach pieces of ¾-in.-thick plywood to form the center side of each door. Don't worry about the exposed edges of the plywood sides; these will be covered by banding.

Create the gallery and drawers

The central gallery, with its cubbyholes used to store planes, gives the cabinet rigidity. Cut the upper and lower crosspieces, then cut the dadoes for the ¼-in.-thick shelf partitions either on the tablesaw or with a router. Use the same method to create the dado on the underside of the gallery to receive the center drawer divider.

Before installing the gallery you need to make the drawers, because their height and spacing will determine the location of the gallery. The six drawers are made of ½-in.-thick plywood with ¼-in. finger joints. The bottoms, made of ¼-in.-thick plywood, sit in a rabbet rather than a groove because the latter would reduce the depth of these already-shallow drawers.

After unscrewing the back panel of the cabinet, rout a dado on each side for the upper shelf, and then glue in the shelf. Stack the drawers using laminate or thin cardboard as spacers, and mark the top of the stack for the location of the bottom dado of the gallery. Lay the gallery across the cabinet and mark the location of the top dado. Cut the pair of dadoes on each side, and then install the gallery and the central drawer divider. The latter is screwed to the bottom of the cabinet from the outside and is not dadoed, so as not to weaken the bottom of the cabinet.

I hung the drawers by attaching ¼-in.-thick by ½-in.-wide strips of hard maple to the sides of the cabinet and the central divider. To get the drawers to hang perfectly

Next cut makes the two main doors. *Tack two strips of wood across the cut line as shown. Then set the sawblade to just score the underside of the strips. In this way the panel is cut in half but won't bind on the sawblade.*

French cleats, ⅝ in. thick by 3 in. wide by 30½ in. long

Carcase

Top shelf, ⅝ in. thick

Piano hinge

Dado, ⅜ in. deep by ⅝ in. wide

Butt hinges

Inside doors, ⅝ in. thick

Door post, ⅝ in. thick, screwed to the cabinet through counterbored holes

Top shelf, ½ in. thick

Bottom shelf, ⅝ in. thick

Gallery dividers, ¼ in. thick

Back panel consists of two layers of ¼-in.-thick plywood. The inner layer has sections cut out to hold panel saws and a carpenter's square.

Drawer guides, hard maple, ¼ in. thick by ½ in. wide by 9½ in. long

Drawer divider

Grooves, ¼ in. deep by ½ in. wide by 9½ in. long

Drawer sides, ½-in.-thick plywood

Drawer fronts and backs, ½-in.-thick plywood

Drawer bottoms, ¼-in.-thick plywood, recessed into a rabbet cut in the bottom of the drawer sides

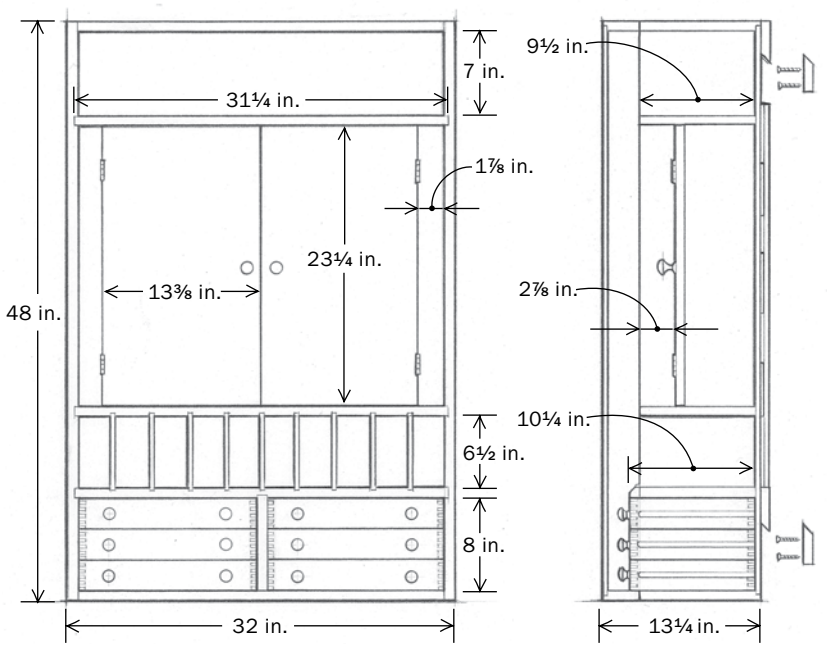

SHELVES AND CUBBYHOLES PROVIDE TOOL STORAGE

The internal doors are ⅝ in. thick; the shelves are either ⅝ in. or ½ in. thick, and the front and back are ½-in.-thick panels. The drawers are made from ½-in.-thick material with ¼-in.-thick plywood used for the drawer bottoms and the gallery dividers.

parallel, I used the same spacers when cutting rabbets in the drawer sides and when attaching the strips to the cabinet.

On a router table, create a guide channel the same width as the drawer sides comprising two outer guide strips, two center strips of wood the width of the straight-cut router bit, and two equal spacers to go above and below the bit that center the drawer side over the router bit. Clamp the outer strips to the table, remove the spacers and the center strips, raise the bit to ¼ in., and cut a groove until just before the finger joints at the front of the drawer.

When all the grooves have been cut, use the spacer strips from the router table and the laminate spacers used earlier when stacking the drawers to establish the location for each maple drawer runner. Screw the runners to the sides, and the central divider and the drawers are hung.

The two inner doors and their posts are made from ⅝-in.-thick plywood. Cut matching recesses on each door and post for a pair of hinges, and then screw each post to the sides of the cabinet between the top of the torsion box and the upper shelf. Hang the doors on these posts.

The separate unit at the back of the cabinet is built of two layers of ¼-in.-thick plywood and should be designed to accommodate carpenter's squares and panel saws. Screw this unit to the back of the cabinet between the French cleats.

The outer doors are hung using piano hinges and magnetic catches; ball catches give a positive latch to the doors. After hanging the front doors, conceal the exposed rabbet joint around the front panel with a 3⁄16-in.-thick by ¾-in.-wide strip of solid maple, rounded slightly (as all exposed corners should be).

With the main cabinet construction complete, make and attach custom hangers for each tool using scraps of plywood.

I finished my cabinet with two coats of oil-based sealer that were sanded with P320-grit sandpaper. Then I wiped on a couple of coats of tung oil.

The cubbyholes and the bottoms of the drawers were covered with industrial rubber-backed floor covering, available from home centers. It comes in many colors and gives excellent protection to edge tools. The final step was to attach pulls to the drawers and doors, and stout handles to the outside of the cabinet. These are a great help when you and a friend lift the cabinet onto the wall-mounted part of the cleats. Install all of the tools and then start putting them to use. □

Jan Zoltowski is a professional antique and art restorer who lives near Seattle, Wash.

Install the upper shelf and gallery. *Cut a dado on both sides of the cabinet and install the upper shelf. This gives the carcase extra rigidity. After routing the dadoes for the upper and lower shelves, test-fit the gallery and then glue it in.*

Assemble the interior

Attach the inner doors. *Stretching from the top of the gallery to the bottom of the upper shelf, each inner door is hung from a post screwed to the cabinet.*

Storage behind the cabinet. *An inner layer of ¼-in.-thick plywood is cut to receive panel saws and a carpenter's square, then covered by a solid outer piece of plywood.*

Stow-and-Go Router Table

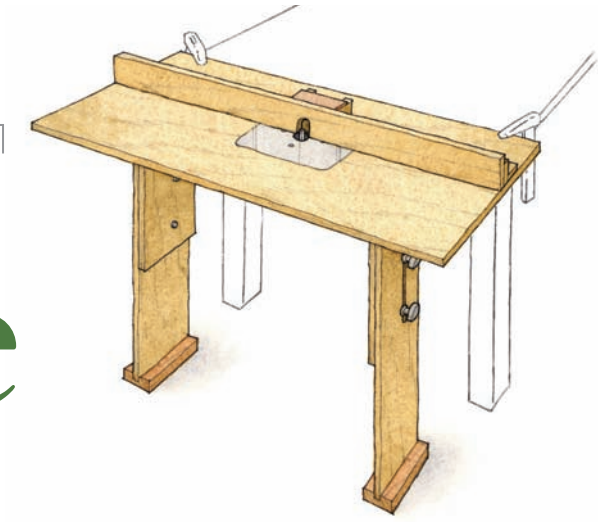

A portable setup with big features

BY ROLAND JOHNSON

Building a router table doesn't require the expertise of NASA engineers. I've been using a simple knockdown router table in my shop for years. It's quick to make and doesn't require much in the way of materials. All you need is a half sheet of plywood, some hardwood lumber, a handful of hardware, a router mounting plate, and a router that features above-the-table adjustments. My table is adjustable in height, has a large top and built-in dust collection, and can be raised and knocked down easily.

The biggest expense is the mounting plate that holds the router in the top. You can buy these plates from JessEm, Woodpecker, or any other router accessory source. I paid about $60 for a Woodpecker mounting plate with three rings. I spent an extra $12 on a template to lay out and cut the opening for it (see photos, below).

The tabletop is 24 in. deep by 48 in. wide. Once you have it cut to size, lay out the opening for the mounting plate. Draw centerlines front to back and side to side. The mounting plate is centered on the front-to-back line, but it's shifted about 4 in. to the right of the side-to-side line. Locating the mounting plate in this way provides a long outfeed surface, which I find useful for many router-table tasks.

Online Extra

To watch a video of the table in use, go to **FineWoodworking.com/WS.**

After routing the mounting-plate opening, cut the hardwood braces that mount under the table. These braces help keep the top flat, so be sure that the edges that mate to the table are square and straight.

Next, cut the parts for the fence, dust-collection box, and leg sections. The fence base and main fence must be perfectly 90° to the tabletop. The sacrificial face is screwed to the main fence, and the dust-hood box is screwed to the fence assembly.

The fence pivots on a bolt and locks in place with a threaded knob. To install the pivot, align the front edge of the fence, including the sacrificial face, with the centerline on the tabletop. Clamp the fence in place and drill a 5/16-in.-dia. hole through the fence base and top.

You're now ready to put this handy table to use. Just don't forget to put it away when you're done.

Roland Johnson is a Fine Woodworking *contributing editor.*

CUT THE OPENING FOR THE MOUNTING PLATE

Mark the opening. *Johnson bought the optional template for the Woodpecker mounting plate.*

Use a jigsaw to rough out the hole. *Stay about 5/8 in. away from the layout lines.*

You don't need a rabbeting bit to cut a rabbet. *For this job, a 3/4-in. top-bearing bit will do.*

Take light passes. *Use the mounting-plate template to guide the router as you cut the rabbet.*

Photos: David Heim; drawings: Jim Richey

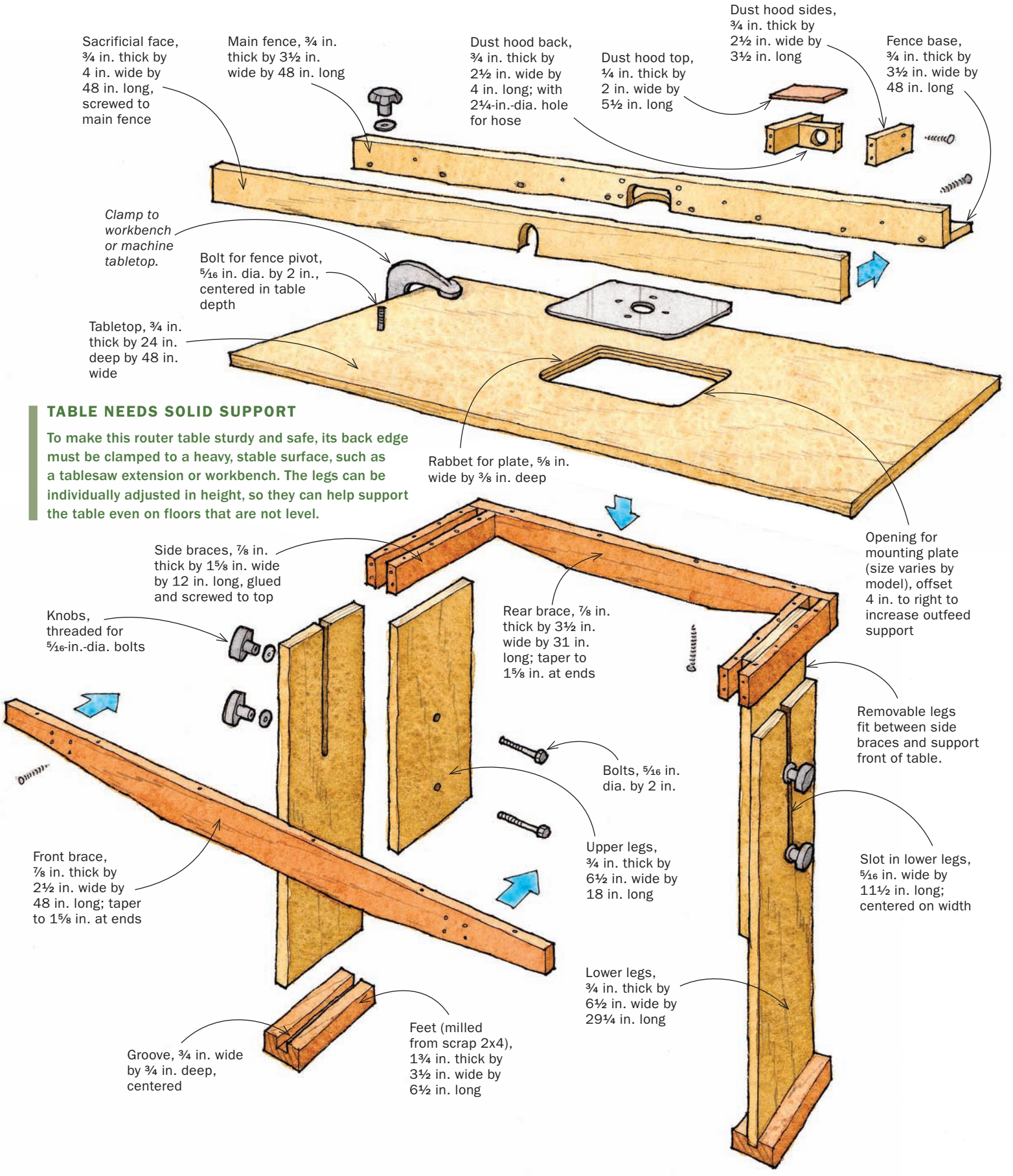

TABLE NEEDS SOLID SUPPORT

To make this router table sturdy and safe, its back edge must be clamped to a heavy, stable surface, such as a tablesaw extension or workbench. The legs can be individually adjusted in height, so they can help support the table even on floors that are not level.

Best-Ever Outfeed Table

Versatile workstation stores all your tablesaw gear and then some

BY JOHN WHITE

Shelve your sled. *A dedicated shelf keeps the crosscut sled out of the way but easily accessible.*

No wasted space. *You can do glue-ups and other bench tasks on this table, so you'll need tools and supplies nearby.*

Blades at the ready. *The bottom drawers are deep enough to store blades vertically, making them easier to identify and pull out.*

Stow your fence. *A well-placed rack keeps the rip fence close at hand.*

Photos, except where noted: Matt Kenney; this page: John Tetreault

A good outfeed table is essential for safe woodworking, because it allows you to control the workpiece as it moves past the blade and off the back of the tablesaw.

Without it, you'll have to push down hard on the back of long boards, which makes it difficult to guide them safely past the blade. An outfeed table also naturally doubles as a work surface for assembly and finishing. But the space beneath the table often lies unused, a wasted opportunity for efficient storage.

This outfeed table has a cabinet below that takes advantage of that space, with dedicated storage areas for the rip fence, miter gauge, crosscut sled, blades, and several big drawers for jigs. And there's plenty of shelf space for general storage, as well as room on the end panels for clamps. The large phenolic-plywood top is great because it's so slick that materials almost float across it. And because the surface resists stains and glue, it's perfect for assembly and finishing. I let the top overhang the base for easier clamping.

It's easy to adjust the table's height and level it, too. So if you move to a new shop, you won't need a new table.

Best of all, this outfeed table is not difficult to build. The hardest part may be dealing with the large sheets of plywood, but I'll offer tips that make breaking down and squaring the material easier. All of the joinery is simple. The cabinet itself is joined by butt joints held together by screws (I'll offer pointers on assembling the joints accurately). The drawers are joined by a rabbet-and-groove joint that requires only two tablesaw setups.

Materials improve function and ease construction

This cabinet is built entirely of sheet goods, except for two Douglas-fir runners. The top, drawer fronts, and kick plates come from a single 4x8 sheet of phenolic plywood. The cabinet is ¾-in.-thick Baltic-birch plywood and the drawers are ½-in.-thick Baltic-birch plywood.

The entire table can be made more economically from medium-density fiberboard (MDF) or ordinary plywood, but you'll have to use connecting bolts with barrel nuts to make strong joints in the softer MDF. With plywood, you can use screws. And you'll need to apply a finish to the

PRECISE PLYWOOD PIECES

Use a circular saw and guide to square up factory-cut edges and to cut parts to a manageable size for the tablesaw.

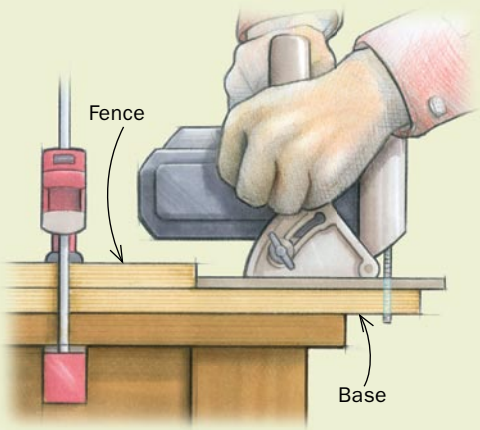

Make a cutting guide. *Attach a fence to a slightly oversize base. Then trim the guide with a circular saw to establish a dead-accurate reference for lining up cuts.*

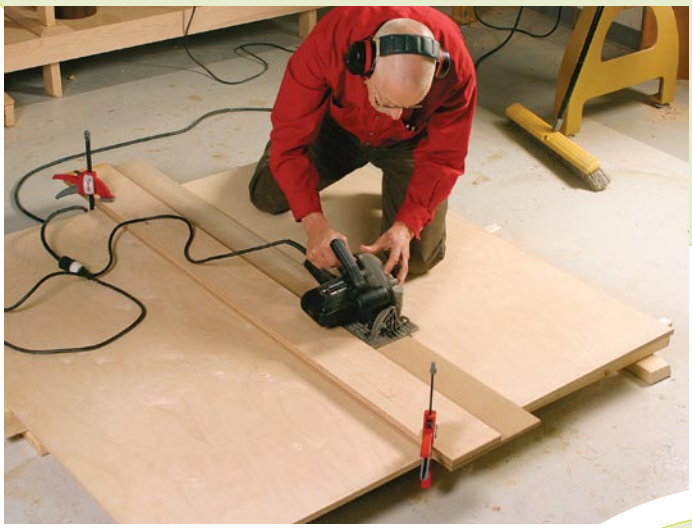

How to use it. *Align the guide so that the first cut not only gives you a straight side, but also a square corner.*

TIP

Bar-clamp handle. *When trimming the panel square, use a bar clamp to help hold it against the fence. A block at either end helps keep the clamp in position.*

BASIC ANATOMY

Baltic-birch and phenolic plywood combine for good looks, a sturdy base, and a low-friction top. Adjust the height shown here to fit your saw.

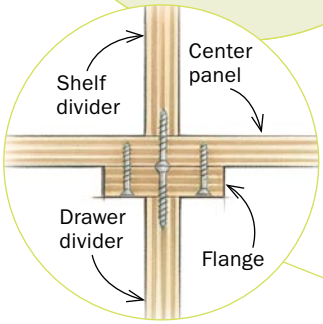

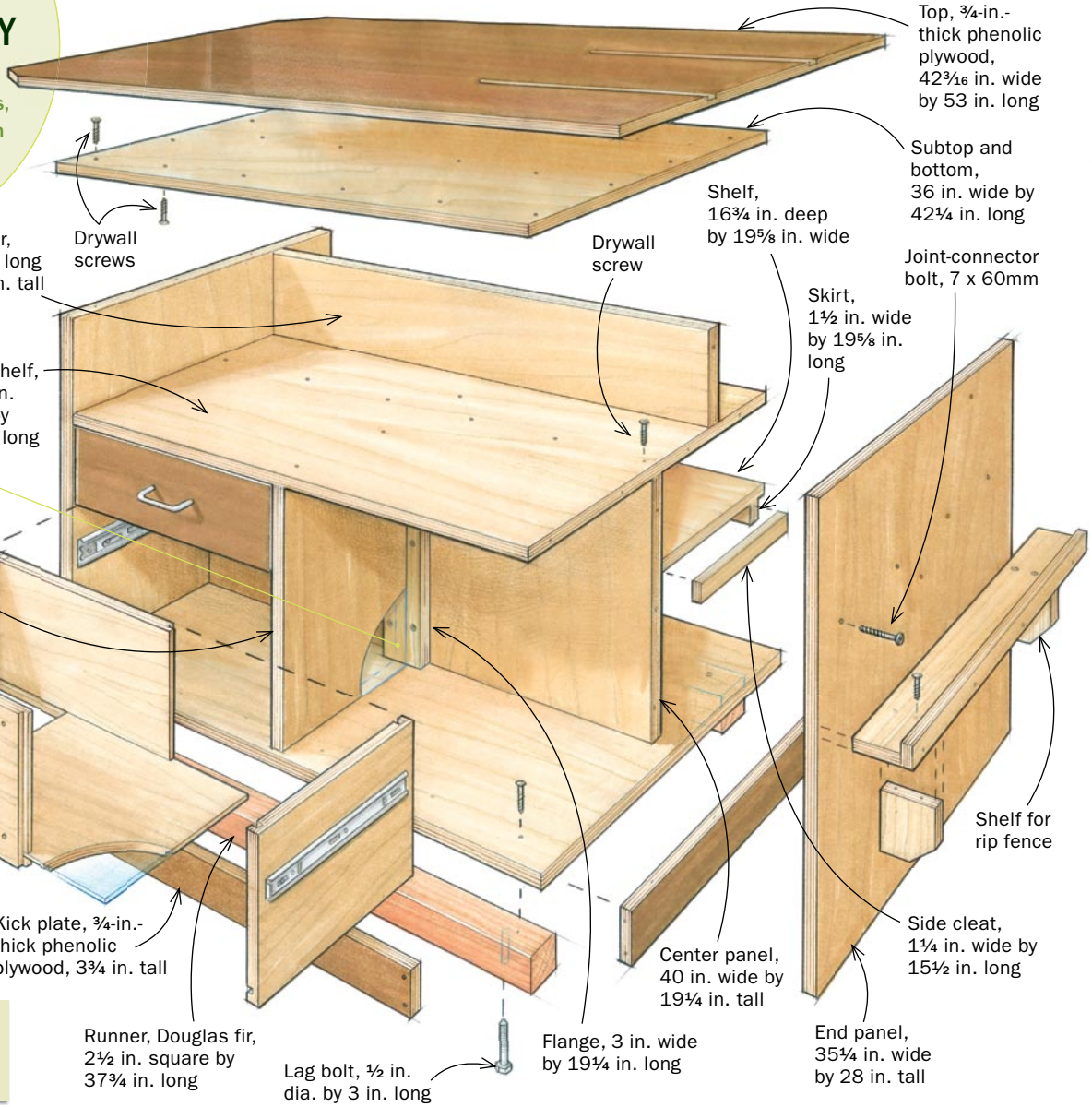

Full-size plans for this outfeed table (including plywood cutting diagrams) are available at FineWoodworking.com/PlanStore.

END VIEW

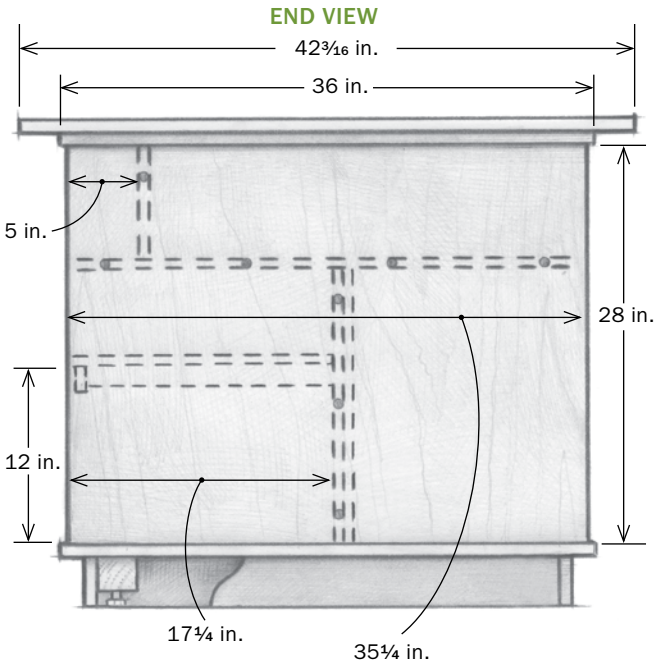

SIDE VIEW

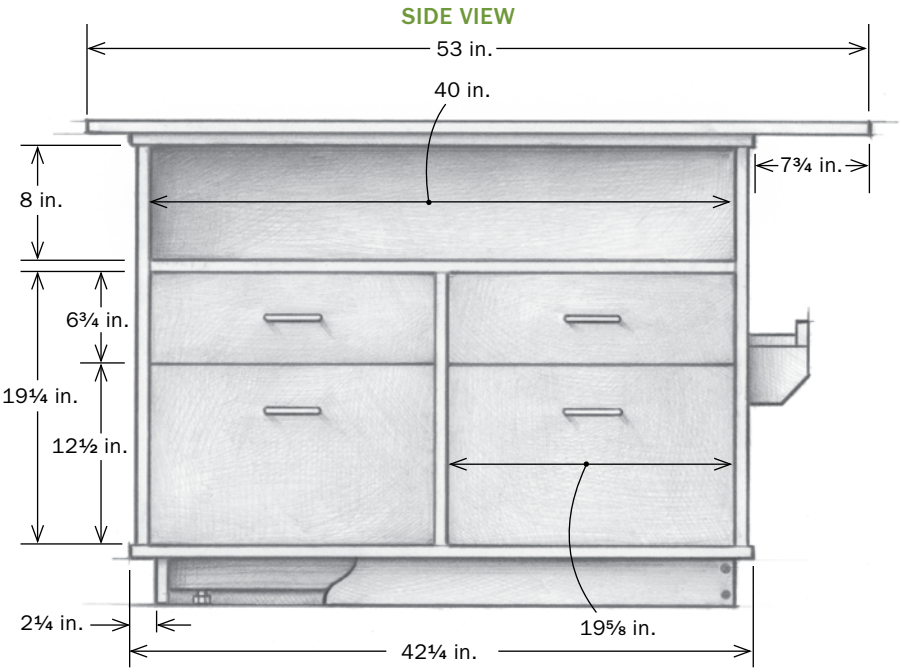

Drawings: Bob La Pointe

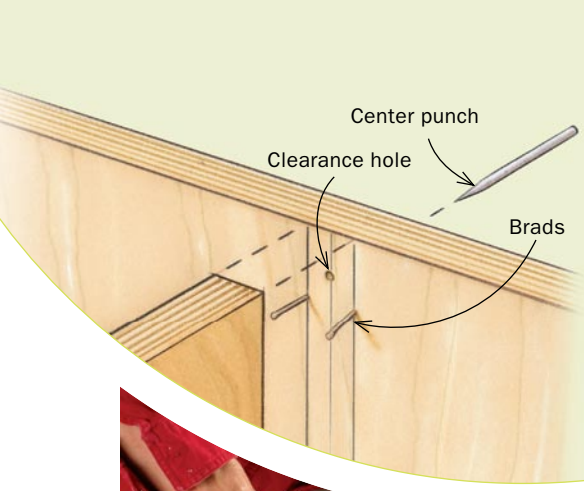

JOINERY TIPS

Careful layout of joint locations and a few well-placed brads take the fuss and frustration out of butt joints. The layout lines show you where to drill, and the brads act as a third hand to hold the panels steady as you mark screw locations.

Drill along the centerline. *Two lines show the edges of the intersecting panel. The third line marks the centerline for the clearance holes.*

Brads are helping hands. *Brads driven in along the edge lines will hold the intersecting panel in place as you transfer the location of the clearance holes. A pair at the top and at the bottom is all you need.*

Transfer the pilot-hole locations. *With the two panels aligned and held in place, slide a center punch through the outer panel and tap it to mark locations for the pilot holes. Disassemble the parts and drill the holes.*

tabletop to toughen it and seal it against stains and glue.

A guide for square panels

You can't rely on the factory-cut edges being square to each other, and full sheets are hard to handle on the tablesaw anyway. Solve both problems by using a circular saw and cutting guide to break down the sheet into smaller workpieces.

Set the guide so that it cuts an edge square to a factory edge. Use a sanding block to clean up the two square edges and then measure and mark the panel's final dimensions. Trim it to size on the tablesaw, running the square edges along the fence.

Bevel all edges on the panels with a chamfer bit. This prevents damage to the panels and adds a bit of safety. A square phenolic edge is very sharp and easily can cut you. Beveled edges also create crisp shadow lines at the joints, which I like.

Screw joints are solid

All of the table's joints, except those in the drawers, are simple butt joints held together with screws. Where they wouldn't

Use a drill to start the screws. *Drive in the joint-connector bolts, leaving them about ⅛ in. proud of the panel.*

Hand torque brings them home. *Use an Allen wrench to drive the bolts flush with the panel. A drill might over-drive the head or strip the pilot hole.*

LOGICAL ORDER FOR ASSEMBLY

Start with the center and end panels because everything else is built around them. The bottom keeps these parts square and stable while you attach the rest of the components.

Start with the core. *Assemble the end panels and center panel, and trace their locations onto the bottom. Mark centerlines, drill holes for the drywall screws, and then attach the bottom.*

Add the dividers. *Attach the shelf divider first. Then install the flange (see drawing, p. 38) and drawer divider.*

The sled shelf is next. *Drive joint-connector bolts through the end panels into the sled shelf. Use drywall screws to secure the shelf to the drawer and shelf dividers.*

Flip the cabinet to attach the feet. *Lag bolts screwed into Douglas-fir runners make easily adjustable feet. After flipping over the cabinet, attach the runners with drywall screws.*

be visible, I used drywall screws. Where the screw heads are exposed, I used joint-connector-bolt wood screws (www.mcfeelys.com, #1423-CWB), which have large, bronze-colored heads that look good on shop furniture. Although these are called bolts, they're actually hefty wood screws that need aligned clearance and pilot holes drilled before you drive them home (see photos, p. 39).

Butt joints can be hard to align and assemble, so I use a couple of tricks to make things easier. First, I mark where one panel butts against the other. With these lines drawn, it's easy to tell where the joint is located and to drill accurate clearance or pilot holes along the centerline.

TABLE TOPS IT OFF

Attach the phenolic top from below. That way, its smooth surface is unbroken except for the miter slots, which provide clearance for gauges and sleds.

Once the clearance holes are drilled, you need to transfer their centers onto the edge of the intersecting panel so that you can drill pilot holes. But it's not easy to hold everything in alignment when you do that, so I drive a few brads into the edge lines drawn earlier to trap the panel and hold it steady while I transfer the centers. I pull out the brads with a claw hammer when the joint is together. The layout lines and small nail holes left behind are hidden inside the case.

Assemble the table in stages

I built my table in stages to avoid accumulated errors, but some parts should be cut in groups for uniformity. The cabinet's center panel can be cut at the same time as the drawer and shelf dividers because they need to be the same height.

Begin by assembling the end panels and the center panel. Once they're joined and square to one another, get the dimensions for the bottom and subtop by measuring the assembly and adding ¾ in. to its width and length. The bottom and subtop overhang the core assembly by ⅜ in. on all four sides, which makes it easier to fit them because the alignment of the edges won't need to be exact. Attach the bottom, but not the subtop.

The drawer and shelf dividers are next. The shelf divider is simply screwed to the center panel. The back of the drawer divider, however, has a strip of plywood attached to it. Screws are then driven through the resulting flange to attach the drawer divider to the center panel (see detail, p. 38). This is necessary, because once the shelf divider is installed, you won't be able to drill through the center panel to attach the drawer divider.

After the dividers are in place, install the large shelf that provides storage for the sled. When you screw it down, keep the drawer and shelf dividers square to the center panel. Next, add the divider that serves as a back to the shelf.

You're now ready to attach the subtop, which adds stiffness to the phenolic top and makes it easier to screw it on. Before you attach it, drill and countersink a series of holes for the screws that will attach the phenolic top to the base. Drill them 6 in. apart around the subtop's perimeter and about 2 in. from the edge. Do the same around the center. Now, attach the small shelf on the side of the table. To keep things simple, I screwed the shelf to a pair of cleats, which are hidden by a skirt on the front edge.

Flip over the base and attach the two runners that receive the table's lag-bolt feet. These runners are made from

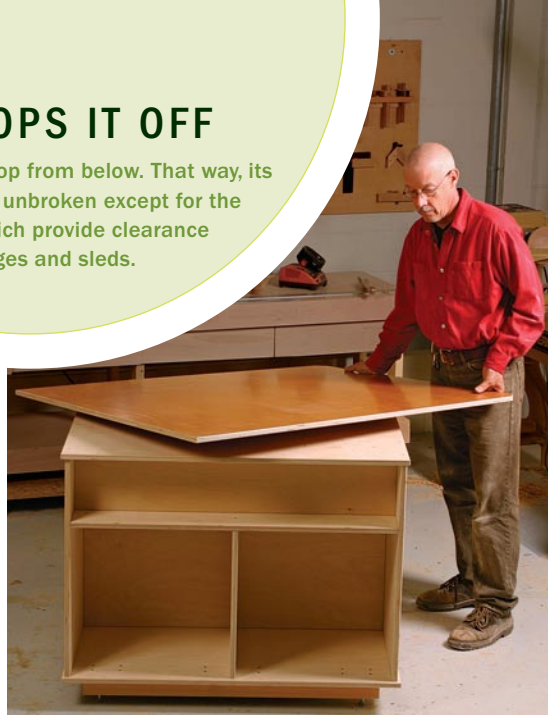

Screws shouldn't show. *After the table has been righted and the subtop attached, you can put the phenolic top in place. Secure it from below with drywall screws.*

Make way for the miter gauge. *Put the outfeed table in place—leveled and adjusted to the right height—and use the saw's miter gauge to locate the clearance slots.*

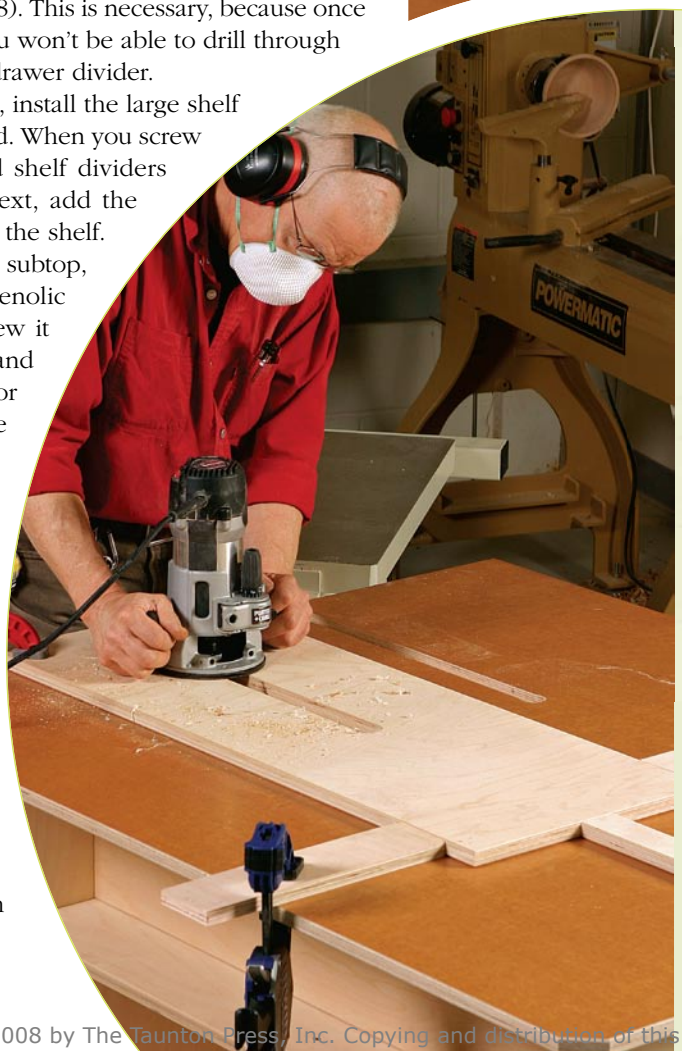

ROUT THE CLEARANCE SLOTS

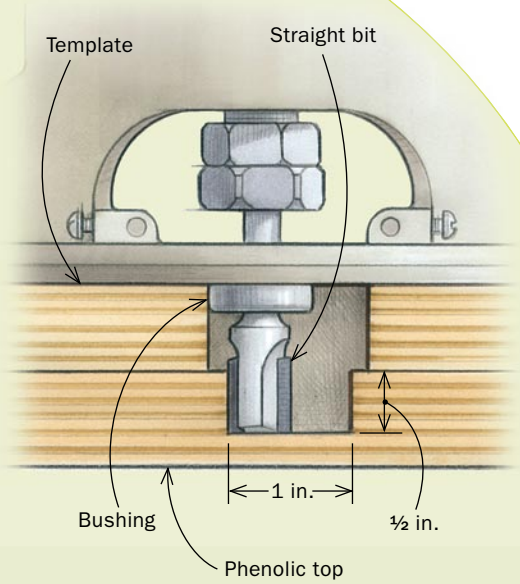

Jig makes quick work of wide slots. *White used a router equipped with a guide bushing and straight bit to cut the clearance slots. His method produces a wide, accurate slot without having to move a straightedge for multiple passes.*

SIMPLE JOINERY, STURDY DRAWERS

Build the whole drawer box with just two tablesaw setups, one for the grooves and one for the rabbets.

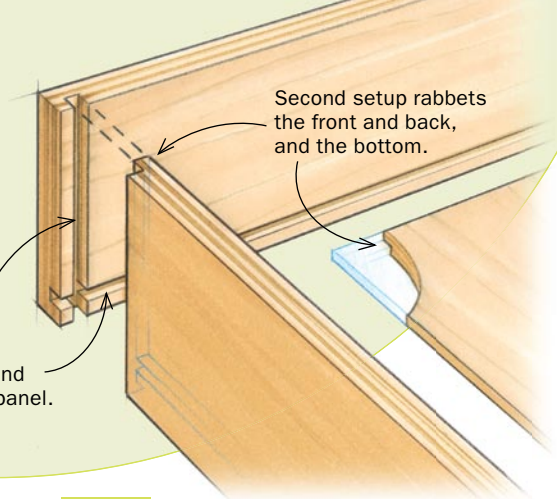

1 Dadoes and grooves

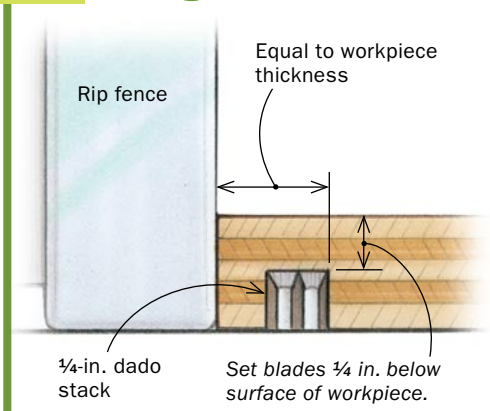

Dadoes in the sides. *Use a miter gauge to guide the drawer sides safely along the rip fence.*

Grooves for the bottoms. *Run the bottom of the sides, fronts, and backs against the fence to cut the groove for the bottom panel.*

2 Rabbets

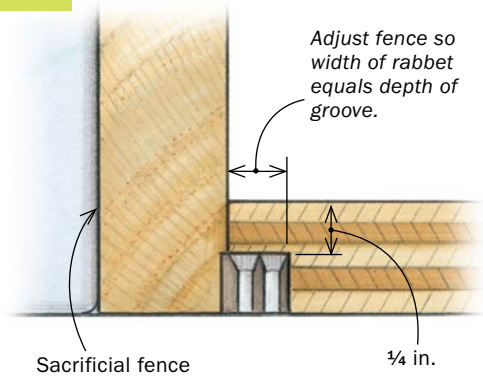

Rabbet the fronts and backs. *With the dado head buried in a sacrificial fence, cut the rabbets for the corner joints.*

Rabbet the bottom panels. *All four sides of the bottom panels are rabbeted to fit into the grooves running around the bottom of the drawer box.*

Douglas-fir 4x4s trimmed to 2½ in. square. Drill pilot holes for the lag-bolt feet and screw them in, leaving them about 1 in. proud of the runners. The lag bolts allow you to adjust the table's height and to level it. Attach them 2¼ in. from the edge of the bottom.

Flip the base back over and attach the phenolic top. In addition to beveling the edges of the panel, I trimmed the two corners opposite the saw at 45°, which is easier to do with the top attached.

Next, level the cabinet and bring the top in line with the saw's table. Then transfer the location of the miter slots directly from the saw table and mark them out on the top. Mine are ½ in. deep by 1 in. wide by 20⅝ in. long. To cut the channels, you only need a router, a straight bit, and a straightedge, but I made a template and used an offset guide bushing, which allowed me to rout the entire channel without having to adjust a straightedge to get the full width.

For dust clearance, I drilled a ¾-in.-dia. hole about 6 in. from the end of each channel. The dust falls into the gap

Assembly is easy. *Go easy on the glue to avoid squeeze-out. Use brads to hold things snug as the glue dries.*

between the back of the saw and the outfeed table.

A fast drawer joint that lasts

You can build the drawer boxes in a variety of ways, but I recommend a rabbet-and-groove joint that requires only two setups on the tablesaw. These drawers are quite strong and can be made in short order.

The drawer boxes are made from Baltic-birch plywood that's just a hair under ½ in. thick, but that doesn't mean the joint is harder to cut. You'll cut all of the dadoes and grooves with the first setup, and all of the rabbets with the second (see photos, facing page). The dadoes, grooves and rabbets are cut with a ¼-in. dado stack set at the same height, so you'll only need to reset the fence between setups.

The easiest way to assemble the drawers is to brush a small amount of glue on the rabbets (you want to avoid squeeze-out) and tack the joints together with two or three small brads. The brads will hold the joint snug as the glue dries. Clamping is time-consuming, and the weight and pressure of the clamps can throw the drawer out of square.

I used standard ball-bearing, full-extension slides from a home center to mount the drawers in the outfeed table.

Attach the drawer fronts and kick plate

Fit the fronts with the table in place and adjusted for height and level. The table might twist a bit as a result of the adjustments, and you'll get a better fit after them.

The four pieces of the kick plate are screwed to one another at the corners, but aren't attached to the cabinet. This makes them easy to remove should you need to tweak the table's height if you move the saw and table.

A few coats of shellac on the Baltic-birch plywood will give it some protection.

Your newly minted outfeed table will make your shop safer and better organized. And that will make your woodworking more enjoyable. □

A former shop manager at Fine Woodworking, *John White is now a freelance writer living in Vermont.*

ADJUST THE HEIGHT

The lag-bolt feet let you adjust the table to be level and just the right height.

Check for a consistent gap. *The outfeed table should be a hair below the saw table. Hold a straightedge firmly down on the tablesaw to check.*

Quick adjustments. *The coarse thread of the lag bolts makes for speedy height adjustments.*

CAP IT OFF

Phenolic drawer fronts and kick plates are durable, but also give the cabinet a unified look and subtle pop.

Add a kick plate. *The plate hides the feet and stops things from rolling under the cabinet. It's easy to remove to make height adjustments.*

Install the false fronts. *Use shims and double-faced tape to position each drawer front, and then screw it on from the inside.*

ENGINEERED WITH YOU IN MIND

FOR A MORE PRODUCTIVE WAY TO WORK

15 GAUGE ANGLED FINISH NAILER KIT

The Bostitch 15 gauge "FN" style Finish Nailer is loaded with several world's first innovations for pneumatic nailers that help you remain efficient and eliminate downtime.

- LED work-light for increased visibility in hard-to-see areas
- Air blower to clear debris from the work surface
- 16" on-center gauge that directs users to the next stud

These features, combined with the industry's best warranty, provide the durability and productivity you demand on the job. That's why Bostitch has been the leader of pneumatic and fastening tools for more than 100 years.

N62FNK-2

Kit Includes:
Finish Nailer, 1/4" Swivel Air Fitting, 1000 2" Finish Nails, 4 Profile Tips, Carrying Case, Hex Wrench & Belt Hook

BOSTITCH 7 YEAR LIMITED WARRANTY

Visit your local retailer or learn more at **Bostitch.com**

STANLEY BOSTITCH®