Build a Sofa Table

An Arts and Crafts design with a contemporary twist

BY SCOTT GIBSON

A couple of years ago, some friends expanded their small farmhouse by adding a wing that included a new a living/dining room. At one end they built a big fieldstone fireplace and moved in a Stickley-style sofa. The back of the sofa faces the dining-room table a half-dozen feet away. A narrow table at the back of the sofa would offer a convenient place to lay out food, plates or serving utensils, but there was very little room to work with. The tabletop could be no deeper than 12 in. In addition, the base could not completely obscure the quartersawn oak panels in the back of the sofa.

This table was designed to fit that space. Its top is exactly 1 ft. deep and 60 in. wide, big enough to be useful but not wide enough to block traffic. Its drawers are shallow—just 3 in. deep inside—so the upper part of the table presents a low profile. To keep it from looking too spindly, I added a curved steel stretcher at the base. The table fits the spot perfectly, but it also could work in any long, narrow space, like an entrance hall.

Nothing about the construction is complicated, although two components—the legs and the steel stretcher—require more than their fair share of planning.

Making the legs

Gustav Stickley's Craftsman furniture gets a good deal of its charm from its simple, rectilinear lines and the rays exposed on the radial face of the white oak he typically

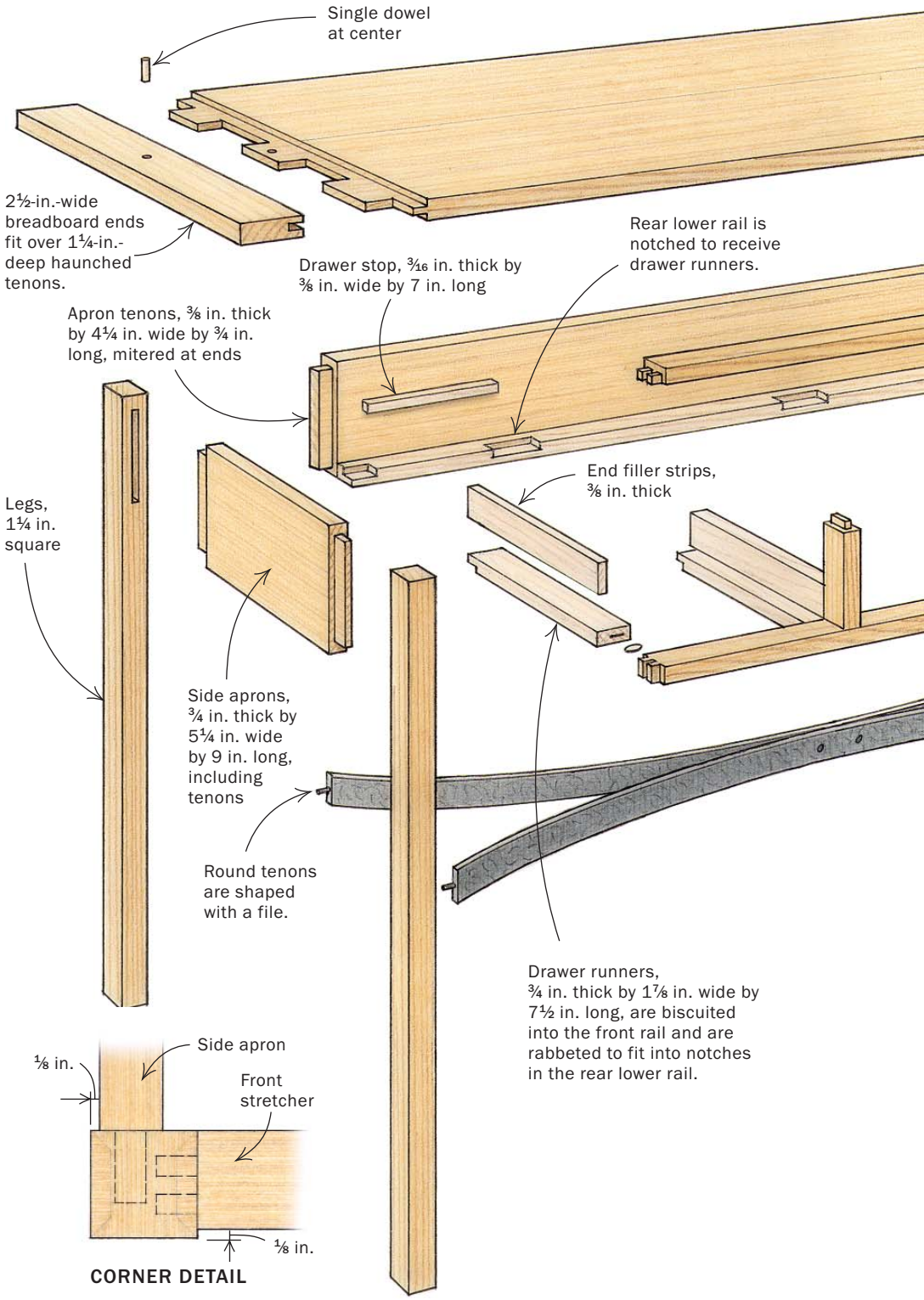

Drawings: Vince Babak

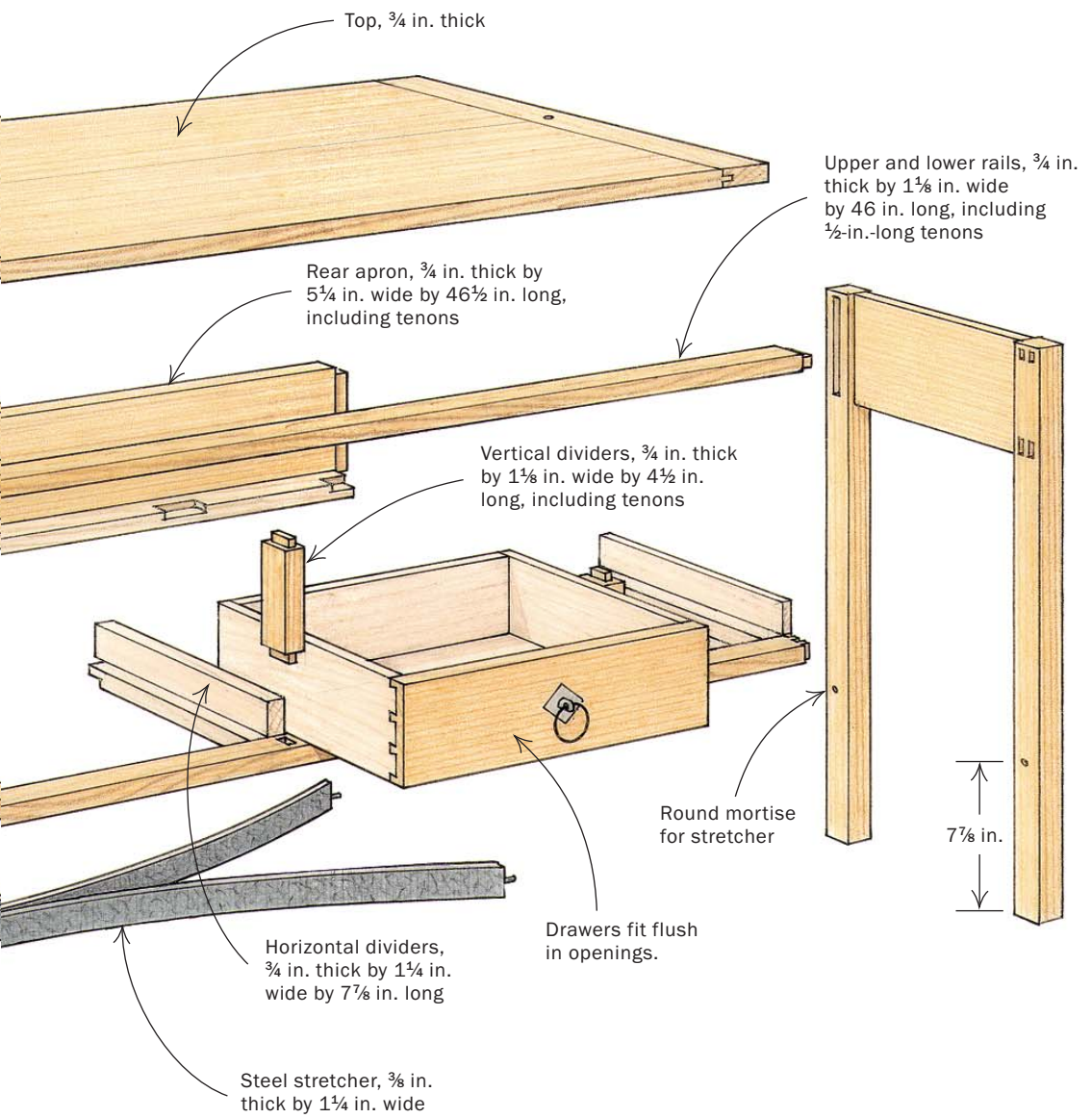

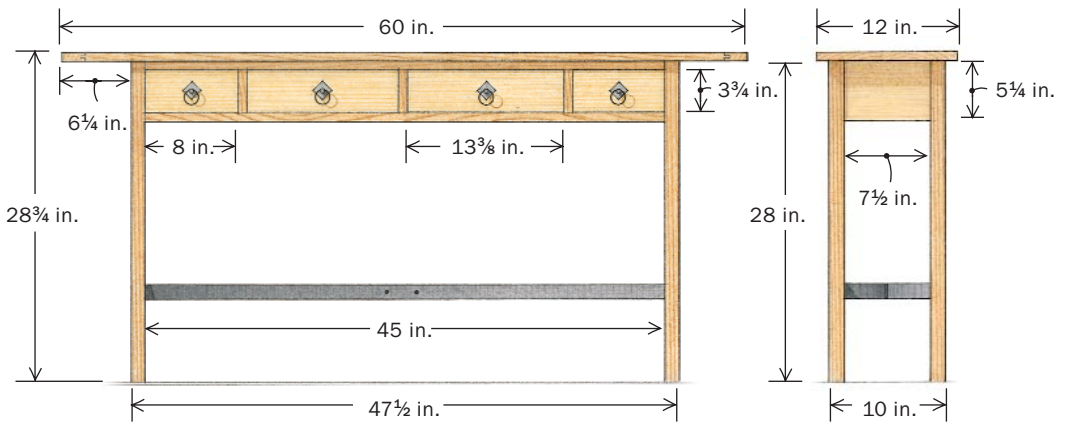

Four ways to make a quartersawn leg

Quartersawn legs are a signature of Arts and Crafts furniture. Here are four ways to make them.

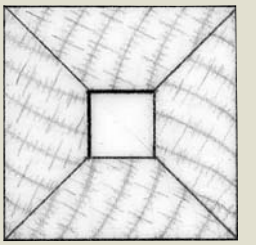

MITERED ASSEMBLY
Set up your tablesaw at 45°, miter all four pieces and glue them together.

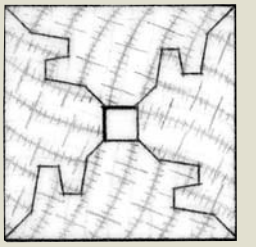

LOCK MITER
With a lock-miter router bit, assembly can be easier and the leg stronger.

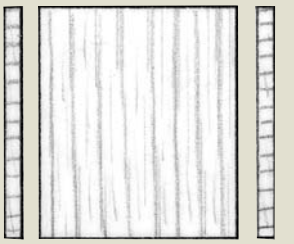

VENEER ON TWO FACES
A simple solution is to cut the leg ¼ in. undersize and glue on two ⅛-in.-thick quartersawn veneers. The glueline virtually disappears, especially if the edges are chamfered.

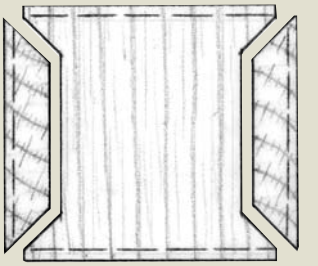

AUTHOR'S SOLUTION
Gibson starts with a leg that is ⅛ in. oversize. Then he makes 45° cuts in the four corners and plows out the middle of two faces with a dado blade. He uses epoxy to glue in oversize wedges with quartersawn faces, then planes all four sides down to size.

DOUBLE MORTISE-AND-TENON JOINERY

For strength, the upper and lower rails are joined to the legs with double tenons.

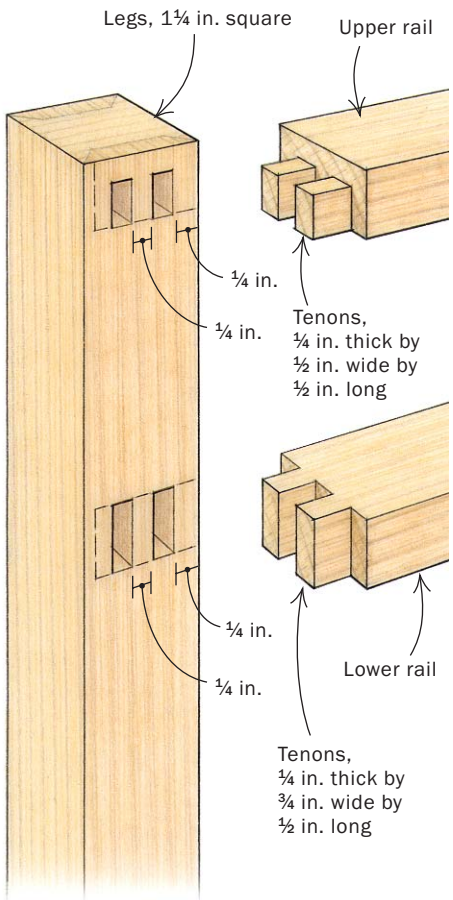

Mortise for double tenons. *Using double tenons creates a stronger joint. To ensure consistency, cut all of the mortises at the same time.*

Use the mortises to lay out the tenons. *Place the rail on the mortised leg and mark the locations of the tenons.*

One pass removes the waste. *Clamp the rail to your miter-gauge fence and use a dado blade to remove the waste. Use a chisel to fine-tune the fit. A taller fence and a sturdier clamp would be safer.*

used. To make the legs, Stickley milled an interlocking profile into the edges of four pieces of 4/4 quartersawn stock and glued them together so the distinctive figure showed on all four sides. There is more than one way to make the legs this way (see the drawings on p. 75), so choose an option that works best for you.

Cutting the base joinery

Milling leg pieces so that a radial face is exposed on each side takes time and patience, but the rest of the joinery in the table is straightforward. Apron pieces on the sides and back are joined to the legs with mortise-and-tenon connections. At the front of the table, two long rails connect the legs. Short dividers create the drawer openings. Here, the joinery is all mortise and tenon.

To make the drawer-rail assembly as sag-free as possible, the two rails are as heavy as I could make them: ¾ in. thick and 1⅛ in. wide. The double mortises on each leg for the bottom rail are ¾ in. wide by ¼ in. thick by ½ in. long. For the top rail, the mortises are ½ in. wide. The ends of the rails get a corresponding double tenon. With a single tenon, you easily can adjust a tablesaw jig with a piece of scrap until the tenon fits the mortise perfectly, then run off all of the tenons quickly. For a double tenon, that's not possible. So lay out the joints on each piece and, using a miter gauge, cut the tenons by eye with a dado blade on a tablesaw. If you're careful, the process is quick and accurate. At the very least, a dado sure makes it easy to remove the waste between the tenons—a chore when you're chopping them out by hand.

Each of the three vertical dividers between the drawers gets a stub tenon, ¼ in. thick by 9/16 in. wide by ⅜ in. long. This drawer assembly can be glued up in advance. But first, cut a biscuit slot in the back of the lower rail at each divider location. The slots will be used later for the drawer runners, and it's easiest to cut them now.

Making the steel stretcher

Stickley furniture has mostly straight lines. This table does, too, but I thought a curved stretcher at the bottom of the table would relieve some of that monotony. Making it from a completely different material was appealing, too. My son, Ben, fabricated these two curved pieces from mild steel, heating the pieces in a coal forge and

Photos: Tim Sams

WHERE METAL AND WOOD MEET

The two pieces of curved steel that form the bottom stretcher are tenoned on both ends. The tenons, shaped with a hacksaw and a mill file, fit into holes drilled by hand, on an angle, into the legs.

Steel tenons filed to fit. *Gibson uses a mill file to shape the stretcher tenons to their final thickness.*

hammering them into shape over a pine log (see the photo below). The two pieces are joined at the center by a pair of ¼-in. steel rivets.

Ben had to make the stretcher fit exactly between the legs of the table base. To guarantee a good fit, I drew the stretcher full scale on a piece of plywood. That gave Ben a reference against which to check his work. At the ends of the stretcher pieces, he formed ½-in.-long tenons that fit into mortises drilled into the inside faces of the legs. The stretcher is glued to the legs with epoxy. Finding a blacksmith to make parts such as this is not always easy, but a national organization of blacksmiths can help

Assemble the table on its side. *With the side flat on the floor, assemble all of the apron pieces and the steel stretcher. Then attach the second side assembly.*

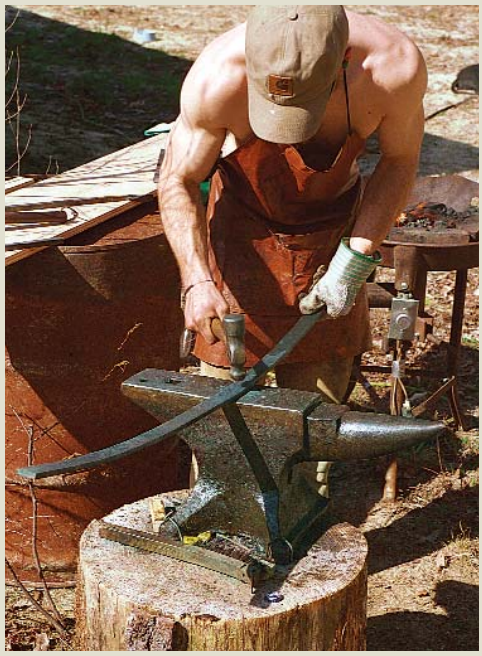

Texturing the stretcher. *Blacksmith Ben Gibson uses a ball-peen hammer to create a dimpled texture in the stretcher.*

Finding a blacksmith

The heyday of the village smithy may be long past, but there still are thousands of skilled artisans capable of fabricating custom iron or steel furniture components. One place to look is on the web site of the Artist-Blacksmith's Association of North America (www.abana.org; 706-310-1030). The organization claims a membership of 4,500 in the United States, Canada, New Zealand and Australia. Although individual members are not listed, the site gives names, phone numbers and e-mail addresses for chapter presidents by state and region. They should be able to recommend someone local.

Jonathan Nedbor, president of the Northeastern Blacksmiths Association, said a blacksmith probably can offer ideas on how metal can be worked to complement a piece of furniture in ways a woodworker might not think of. Although he would rather fabricate metal parts with the piece of furniture in his shop, Nedbor said he also can work from scale drawings.

Nedbor said it's important to find a blacksmith who is competent and has a similar design sense to yours. "There's no way to know until you really look at their work and do a little research talking with them," he said.

Steel is relatively cheap, but labor rates vary considerably. Full-time smiths are likely to charge more because they carry higher overhead than do weekend or evening blacksmiths who hold down day jobs. Sound familiar? Labor rates also vary by region. Nedbor's shop rate is $58 an hour.

JIG FOR MAKING BREADBOARD ENDS

This jig slips over the end of the tabletop and provides a guide for a router to make the breadboard tenons. It's held in place by wedges and allows the tenons to be routed quickly and accurately on both sides of the tabletop.

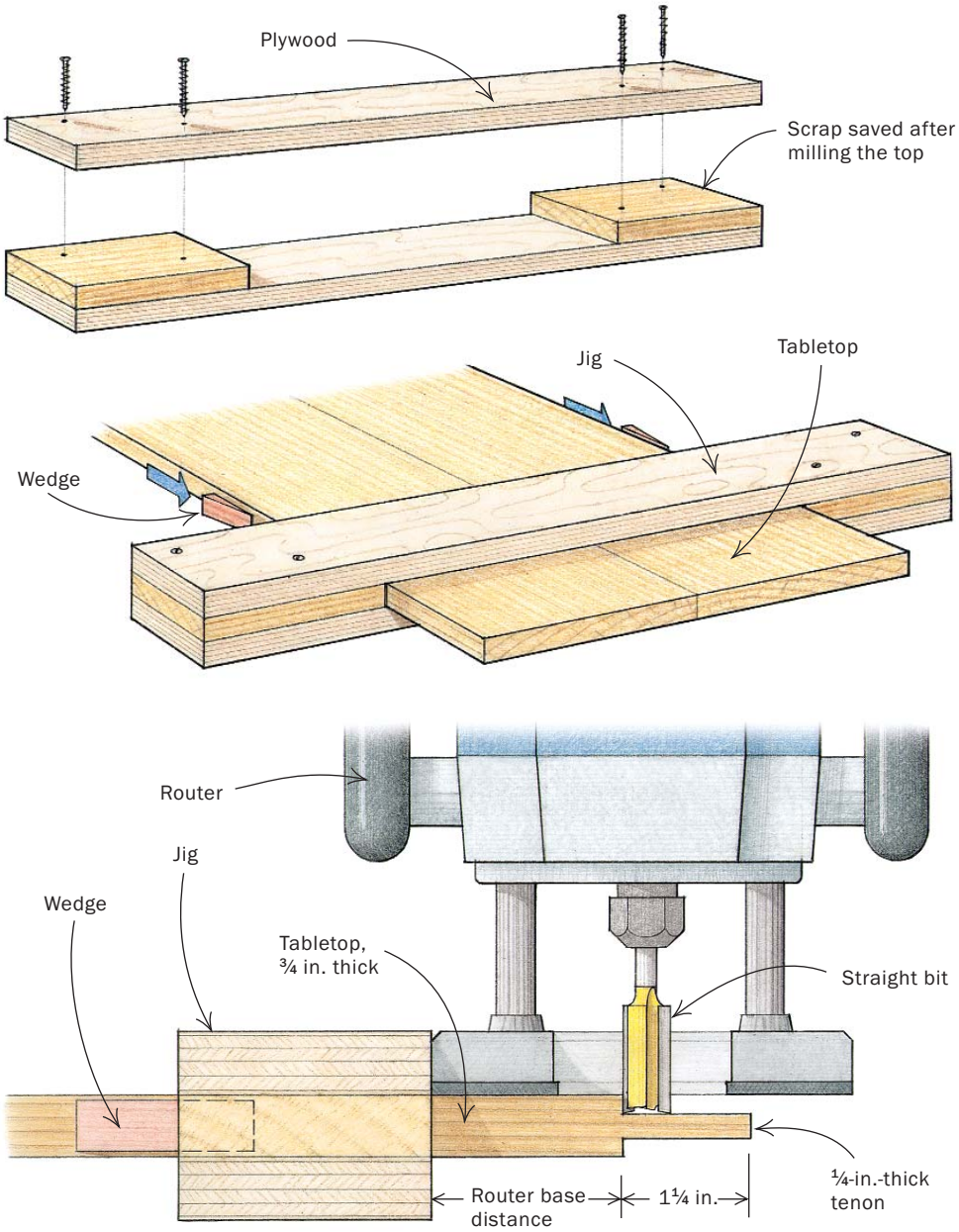

1 ***Hold the jig in place.*** *Tap wedges between the sides of the top and the jig at the back so that it won't move during routing.*

2 ***Rout the tenon.*** *Butt the router against the edge of the jig. Rout out the tenon waste in two passes.*

3 ***Flip the tabletop to rout the other side.*** *The best part of this jig is that once one side is done, you simply flip the board over and rout the other side.*

(see p. 77). This table also can be made using wooden stretchers.

Once the steel stretcher has been made, the parts of the table can be glued together. To make the glue-up manageable, the side aprons and the drawer-rail assembly should be glued together first. After that, the drawer-rail assembly, the long back apron and the stretcher are put together. A dry run, and an extra pair of hands, is a good idea. Once the glue has dried, add the drawer runners and horizontal dividers. I made these from poplar. They are glued to the inside of the drawer-rail assembly to create level, square openings for the four drawers.

Adding drawers and the top

The drawer fronts were cut from a single board to create continuous figure and color across the front of the table. Cut the ¾-in.-thick drawer fronts first. They should fit flush into their openings. The poplar drawer sides, ⅜ in. thick, are cut to width in order to slide perfectly into the openings. I handplaned the drawers to fit after they

Remove the waste. *Use a jigsaw to cut away the waste between tenons for the breadboard ends. Leave a shallow stub tenon between them, creating a haunched tenon for the full width of the top.*

Fit the breadboard ends. *After mortising the breadboard ends, fit them to the tenons using a rabbet plane or a chisel.*

were glued up. To operate smoothly, they must fit their openings snugly.

The drawers come within ¼ in. of the rear apron. Small strips of poplar glued or screwed to the back of the runners stop the drawer fronts so they're flush. Once the drawer sides and front have been cut out, cut a ¼-in.-wide groove around the inside edge, beginning ¼ in. up from the bottom edge. The back of the drawer is not as wide as the sides and is cut to stop at the top of the groove for the bottom.

These drawer bottoms are clear white pine, ¼ in. thick. Just about any material will do, including ¼-in.-thick hardwood plywood. The bottoms should be oriented so that the grain runs side to side. Glue up the drawer box first, then add the bottom and secure it with a single screw set in the back. A slot in the bottom allows the pine to move seasonally without disturbing the dimensions of the drawer box.

Making the top and breadboard ends

I made the top from a plank roughly 7 in. wide by 10 ft. long. I cut it in half and edge-joined the pieces for a good match in figure and color. After the two pieces had been glued up and cut to finished size, I cut two breadboard ends 2½ in. wide and as long as the top is wide. A breadboard end is a wood cap that fits over haunched tenons on the end of a tabletop. I use them on tabletops because they are visually pleasing and keep the top flat.

This table's breadboard end is ¾ in. thick by 2½ in. wide by 12 in. long. On the tablesaw, I plowed a ½-in.-deep groove in the center of one edge. This is the depth of the haunched tenon. Then, on the grooved edge, I marked the locations for three tenons 2 in. wide, then cut a 1½-in.-deep mortise at each location. Transfer the marks from the breadboard end to the tabletop.

I used a router and a simple shopmade jig to make the tenons on the ends of the top (see the facing page). The jig ensured that the shoulder of the tenon would be in the same plane on each side of the table.

On the tenon, I extended the marks I'd made from the breadboard end and trimmed the tenons to width. I used a jigsaw for the inside tenons and a handsaw for the outside haunches. Finally, I fit the breadboard end to the tenons, trimming where necessary for a good fit.

On a wide top, each tenon can be pinned with a wood peg, but holes in the outer tenons should be elongated to allow for seasonal movement in the top. Because this top is only 12 in. wide, I used a single pin on the middle tenons.

This table is stained to the same reddish brown of the sofa. The stain color is a 50-50 mix of two Minwax stains, ipswich pine and puritan pine. The topcoat is Tried & True varnish oil. □

Scott Gibson is a furniture maker and freelance writer living in Maine.