4 Planes for Joinery

Get perfect dadoes, grooves, rabbets, and tenons in no time

BY VIC TESOLIN

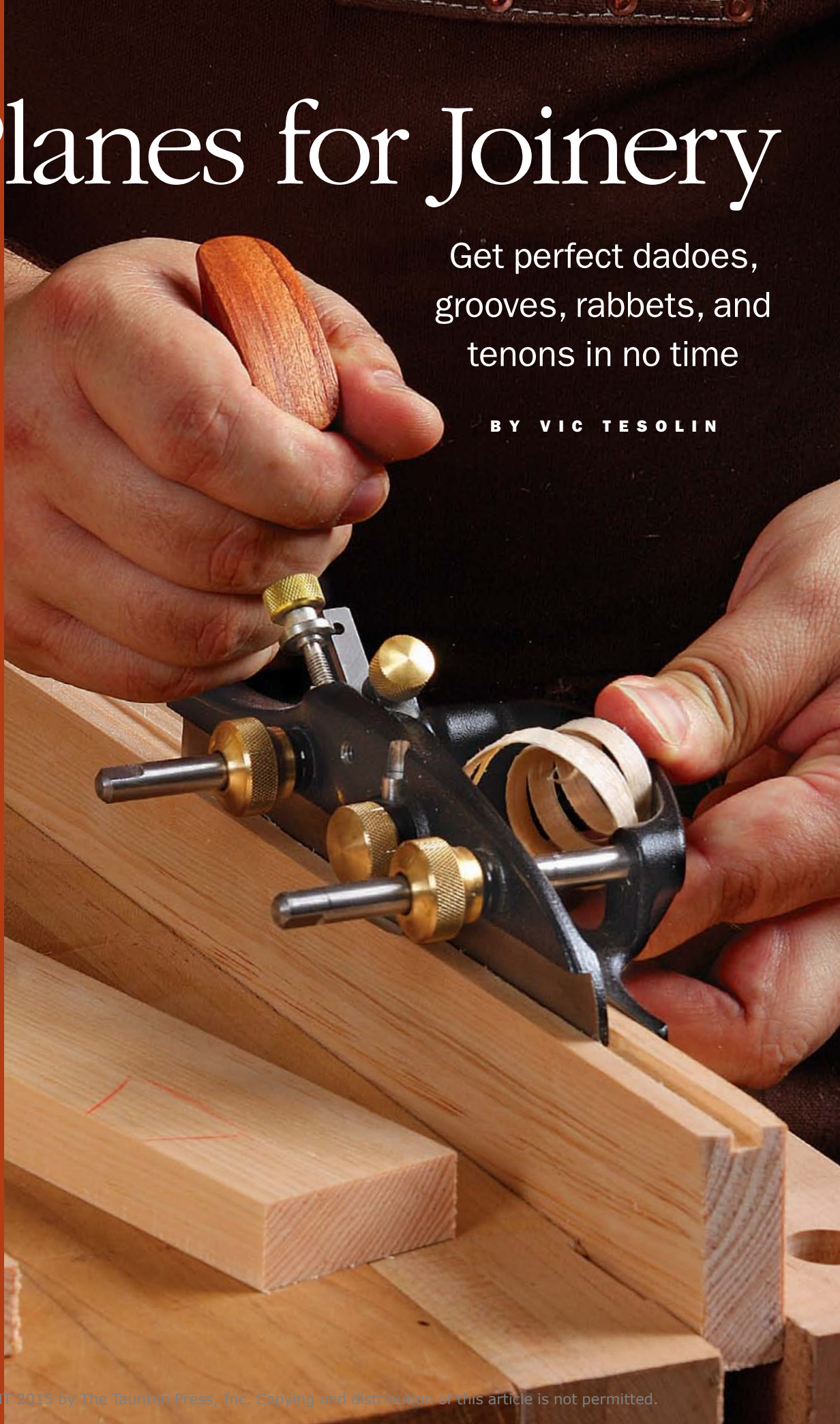

At just 170 sq. ft., my shop is—without question—small. When I first moved into it, I was forced to think carefully about which machines were essential and which I could do without. In the end, only my bandsaw, drill press, and thickness planer survived the cut. As a result, most of my woodworking, including all of the joinery, is done with hand tools.

After I made that decision, it didn't take long to realize that to cut joinery by hand I'd need more than just my backsaw and a set of chisels. So over time I added some specialty planes to my collection. With these planes—shoulder, router, rabbet, and plow—I'm able to knock out just about any traditional furniture joint quickly and accurately. Here I'll demonstrate how I use each of these planes in my furniture making, and I'll give you some tips on setting them up for best results.

Vic Tesolin enjoys building furniture with hand tools in his well-insulated shop outside of Ottawa, Ont., Canada.

SHOULDER PLANE
Fine-tunes tenons

Cutting the mortise-and-tenon joint by hand means sawing the shoulders and the cheeks with a backsaw. And unless your saw work is perfect, you'll need to trim both the cheeks and the shoulders to get the tenon to fit the mortise tightly with no gaps. This is where the shoulder plane comes in. As its name suggests, it excels at trimming shoulders. Set for a light cut, it can also do a good job of trimming the cheeks. Your first shoulder plane should have a ¾-in.-wide blade. It's small enough for shoulders, but wide enough to trim most cheeks in two passes. Comfort is important, too, so give the plane a spin before buying it if you can. Whether you buy new or used, check that the blade is slightly wider than the body, and that the sole is square to both sides. Finally, look for an adjustable mouth, so you can tighten it for light shavings.

SETUP

Align the blade to the body. *To avoid creating a stepped corner, the iron must be flush with the side of the plane that's in the corner. A blade that's a bit wider than the body is easy to set up. With the cap iron loose and the plane on its side, press the blade down against the bench, then retighten the cap iron.*

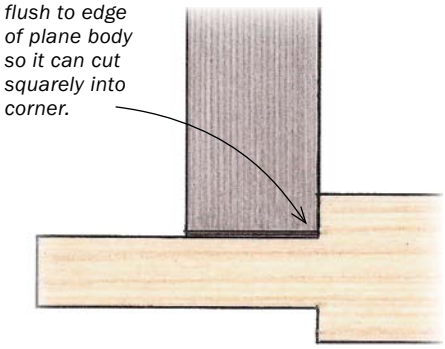

Stand up for cheeks. *You have to flatten the cheeks before trimming the shoulders. To prevent the cheeks from tapering, overlap cuts and work carefully to your layout lines.*

USE

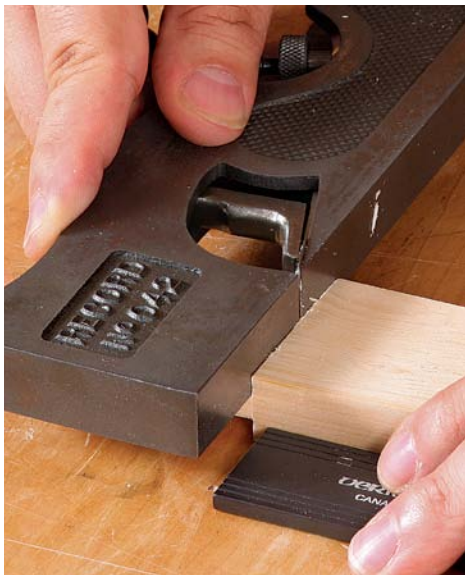

Lay down for shoulders. *With the rail laid horizontally, the tenon's cheek becomes a broad support surface for the plane, making it much easier to trim the shoulder than if you held the rail vertical and tried to balance the plane on the narrow shoulder.*

ROUTER PLANE
Guarantees flat-bottomed cuts

Though designed for a very specific task—to trim the bottom of a recess flat and parallel to the surface of the workpiece—the router plane is quite versatile. It can be used to clean up the bottoms of dadoes and to cut mortises for hinges and inlay. It also can be used to trim tenon cheeks. Working from both sides of the rail, you end up with a tenon that's perfectly centered and cheeks that are

HINGE MORTISES

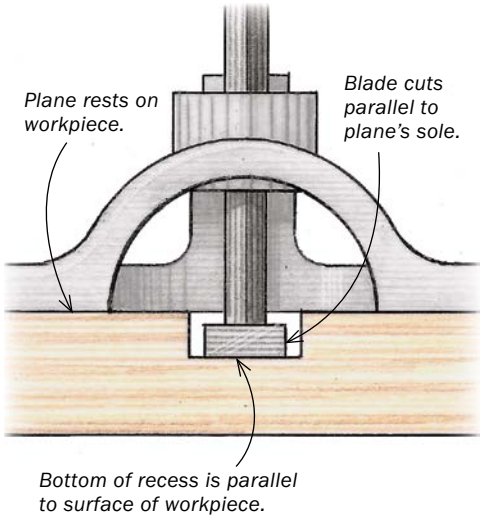

Mark the mortise depth. *Use a wheel or cutting gauge set to the hinge leaf's thickness.*

Set the blade depth. *Put the blade's cutting edge into the knifed line, then lock it in.*

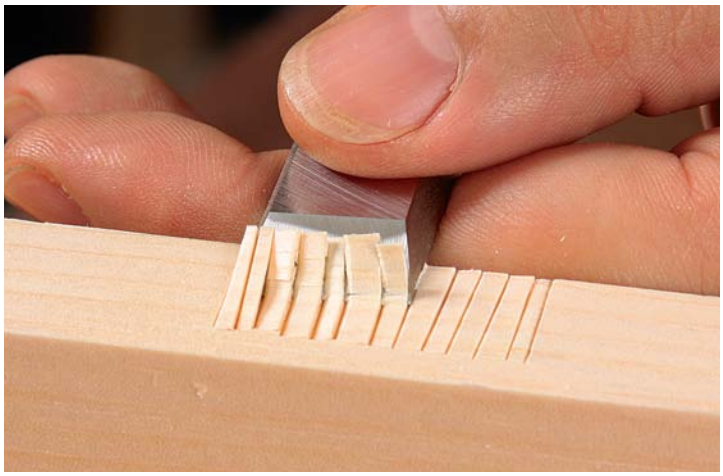

Chisel the waste. *After lightly chopping across the grain down the length of the mortise, clear out the waste by chiseling in from the open side. Don't attempt to pare down to the mortise's full depth.*

Plane to final depth. *Balance the plane on the door's edge, wrapping your fingers around the stile, then come straight in. The blade is set to the final depth, so one series of overlapping cuts does the job.*

Photos: Matt Kenney; drawings: Vince Babak

parallel to one another. Two features I recommend are a depth stop, which makes it easier to set the blade's cutting depth, and a fence, which allows you work parallel to edges. Look for a fence that allows you to work both straight and concave edges. As for size, large router planes are good for most furniture-size joinery and larger hinge mortises. Small ones are great for inlay and smaller hinge mortises.

TENONS

Saw and plane. *You're only roughing out the tenon at this point, so there's no need to saw to the line (right). After setting the blade's depth of cut just like you did for the hinge mortise, clean up the cut with the router plane (below). Press the plane firmly onto the rail, and then pivot the plane with the outboard hand, bringing the blade over the tenon in an arc.*

STOPPED DADOES

Chisel removes the waste in two steps. *After defining the dado's sides with a knife followed by a chisel, work from the center out and down to chip out the waste quickly (top). Use a chisel, bevel down, to get rid of the triangular ridge of waste that remains after the first step (left). Two to three passes should be enough. Stop when there's just a bit left, and trim down to the final depth with the router plane (below).*

RABBET PLANE
Ideal for case joinery

Rabbets show up in furniture making more than you might think. Case and cabinet backs typically fit into rabbets, drawer bottoms are rabbeted to fit into their grooves, and panels—whether for a door or casework—are often rabbeted to fit into the frame's grooves. To cut a rabbet, you need a plane with a blade that extends just past the edge of the body (so that it cuts cleanly into the corner), a fence to control the rabbet's width, a depth stop to determine its depth, and a nicker in front of the blade to sever wood fibers when cutting a cross-grain rabbet. This is exactly what you get with a rabbet plane. It's also nice, but not necessary, to have a skewed blade, which makes it easier to work across the grain.

SETUP

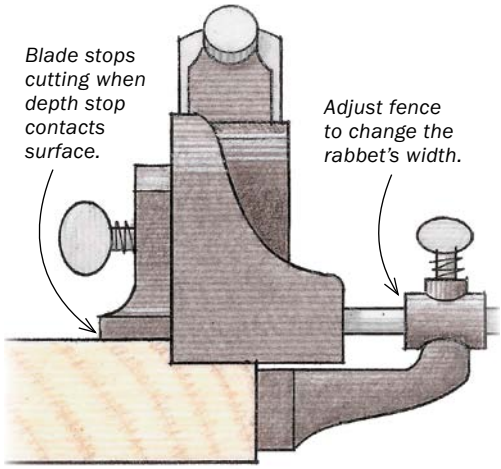

It's simple. *To prevent tearout when cutting cross-grain rabbets use the nicker, making sure it's aligned with the blade's edge (left). It severs the fibers cleanly ahead of the blade. A stop on the side controls the rabbet's depth. It's easiest to set it with a rule (center). But set the fence, which determines the rabbet's width, directly from the workpiece (right).*

USE

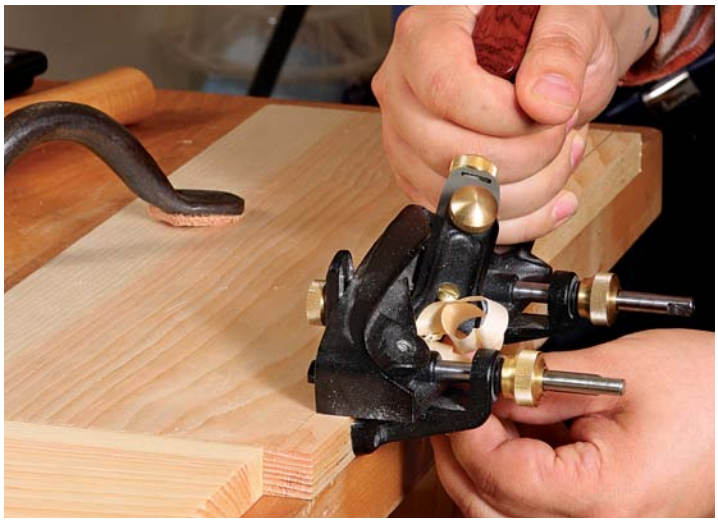

Start at the far end. *As you work back toward the near end, both the fence and the blade will guide the plane. The added tracking from the blade is key while the rabbet is still shallow.*

Concentrate on the fence. *To cut a vertical wall, keep firm, sideways pressure on the plane's fence. Push gently on the tote with the other hand to move the plane through the cut.*

PLOW PLANE
Cuts flawless grooves

Need to make a drawer or a frame-and-panel door? You'll have to cut some grooves. To cut grooves accurately and repeatedly, get a plow plane. Like a rabbet plane, the plow has a fence and depth stop, allowing you to locate the groove precisely and control its depth. You can also get blades of different widths, so you can cut different-size grooves.

SETUP

Fence locates the cutter. *Tesolin scribes a centerline for the groove, centers the cutter on the line, and then pushes the fence against the workpiece, tightening the locknuts with his other hand.*

Stop determines the groove's depth. *Because it's easier and more precise, set the stop with a rule rather than with a mark on the workpiece.*

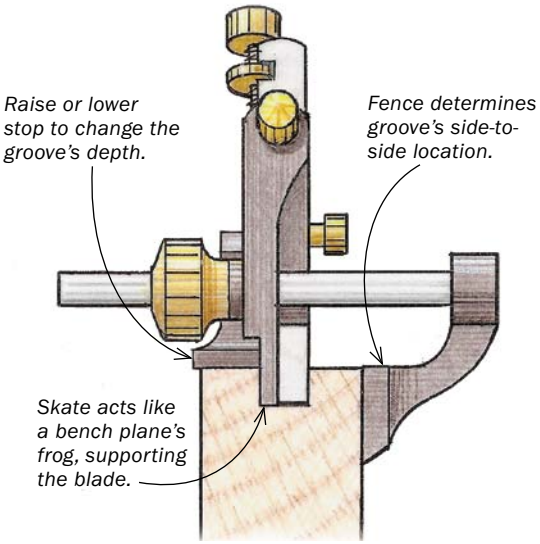

USE

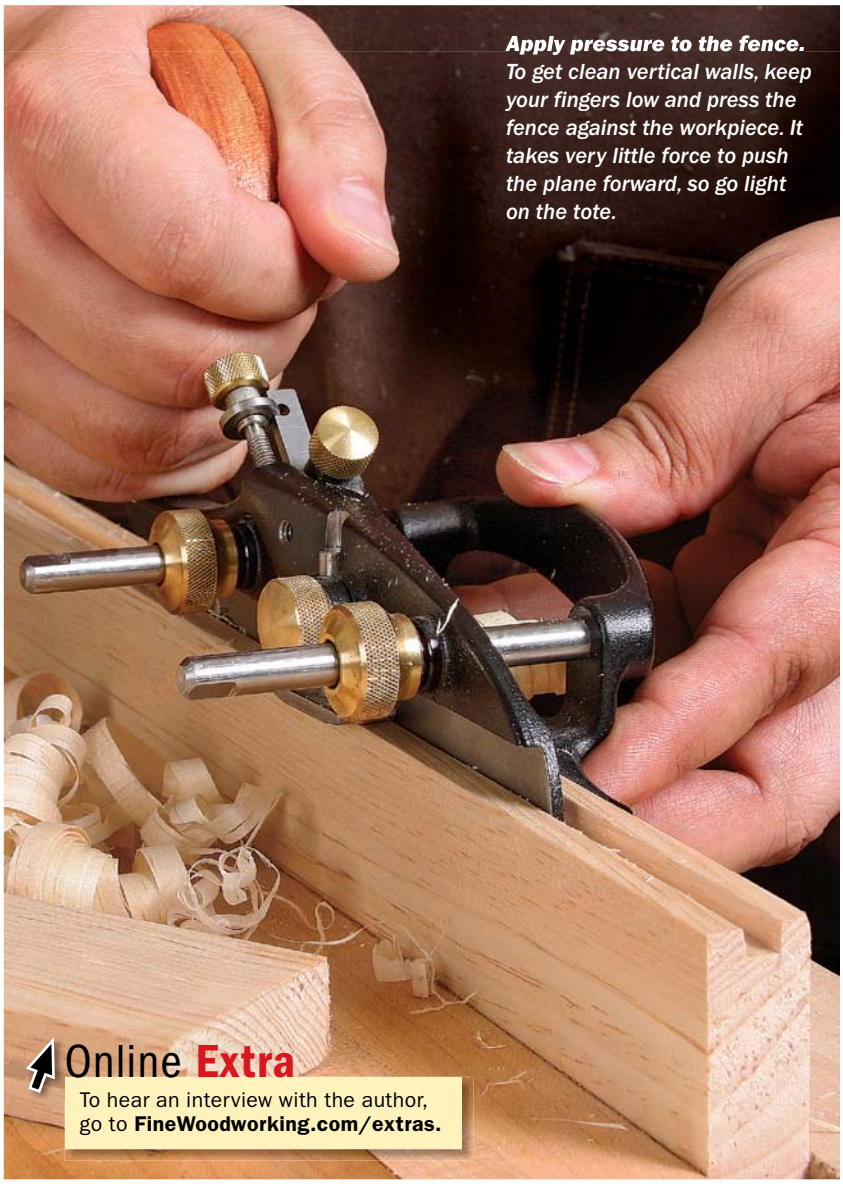

Apply pressure to the fence. *To get clean vertical walls, keep your fingers low and press the fence against the workpiece. It takes very little force to push the plane forward, so go light on the tote.*

Online Extra

To hear an interview with the author, go to **FineWoodworking.com/extras.**