Arts-and-Crafts Sideboard

— Part two —

Adding drawers and doors to a basic carcase

by Gary Rogowski

I've seen many a piece of furniture that looked great from across a room but fell short on closer inspection. Often, it's something as simple as a drawer binding in its opening or a pair of doors that aren't aligned properly. That's why building and fitting these parts carefully is every bit as important to a piece of furniture as making a sturdy case.

The previous issue *of Fine Woodworking* covered carcase construction for the Arts-and-Crafts style sideboard in the photo at right. That article ends with the mahogany case pieces made and mostly glued up. Now it's time for those all important details: adding web frames to support the three drawers and then building and installing both drawers and doors.

Building web frames for the drawers

On many case pieces, the front rail of a web frame—also called a drawer divider—is visible on the outside of the case. On this sideboard, however, I kept the dividers hidden behind the drawer fronts to act as

Bottom photo: Jim Piper

drawer stops. One other benefit of keeping the dividers hidden is that the front of the sideboard has a cleaner, less cluttered look.

All three web frames are made of western maple. The side rails of the upper two frames have tongues that are glued into stopped grooves in the plywood dividers (see the drawing on p. 81).

The side rails are joined to the front web-frame rails with stub tenons ⅜ in. thick and ¼ in. long. The front rails are joined to the plywood dividers with stub tenons of the same size. Web-frame joinery was done on the tablesaw and router table (see the top photo at right). No matter how you do it, make sure the shoulder-to-shoulder lengths of the front rails are all exactly the same. Otherwise, the plywood dividers won't be straight when the rails are in place, altering the size of the drawer openings and making drawer fitting much more difficult.

The bottom drawer also needs a web frame, but I was concerned that if I used the same joinery as I had for the upper two web frames, the grooves would be too close to the spline joints connecting the dividers and divider rails. Grooves located this close to each other would have compromised both joints.

My solution was to use 1½-in.-wide stock for the front and side rails of the bottom web frame (this increased the glue surface area), biscuit the side rails to the divider rails and rabbet the front web-frame rail over the front rail of the carcase (see the drawing on p. 81). The side rails, or runners, were simply butted to the backs of the front rails. After all the web-frame rails were fitted, I planed their tops and bottoms flush to one another and cut grooves for the dust panels.

Glue in dividers, top rail and kickers

The next step was to finish assembling the case. I glued the dividers to the divider rails (see the photo at right). I glued in one at a time and used the front bottom web-frame rail as a spacer between the plywood dividers when gluing in the second one. Dry-clamping the top front carcase rail and kickers to the dividers kept the drawer openings precisely aligned during assembly. After both dividers were in, I glued the top rail and then the kickers in place.

I set the web frames back in place, and checked them for twist using a pair of winding sticks. I pre-finished the web-frame rails with three coats of shellac, being careful to keep it off the joinery. Then I

GROOVES FOR WEB FRAMES

Rout web frame grooves in dividers. *Start and stop marks are penciled on the masking tape on the router-table fence and on the divider itself. Dividers get two grooves on their inside faces for the top two web frames.*

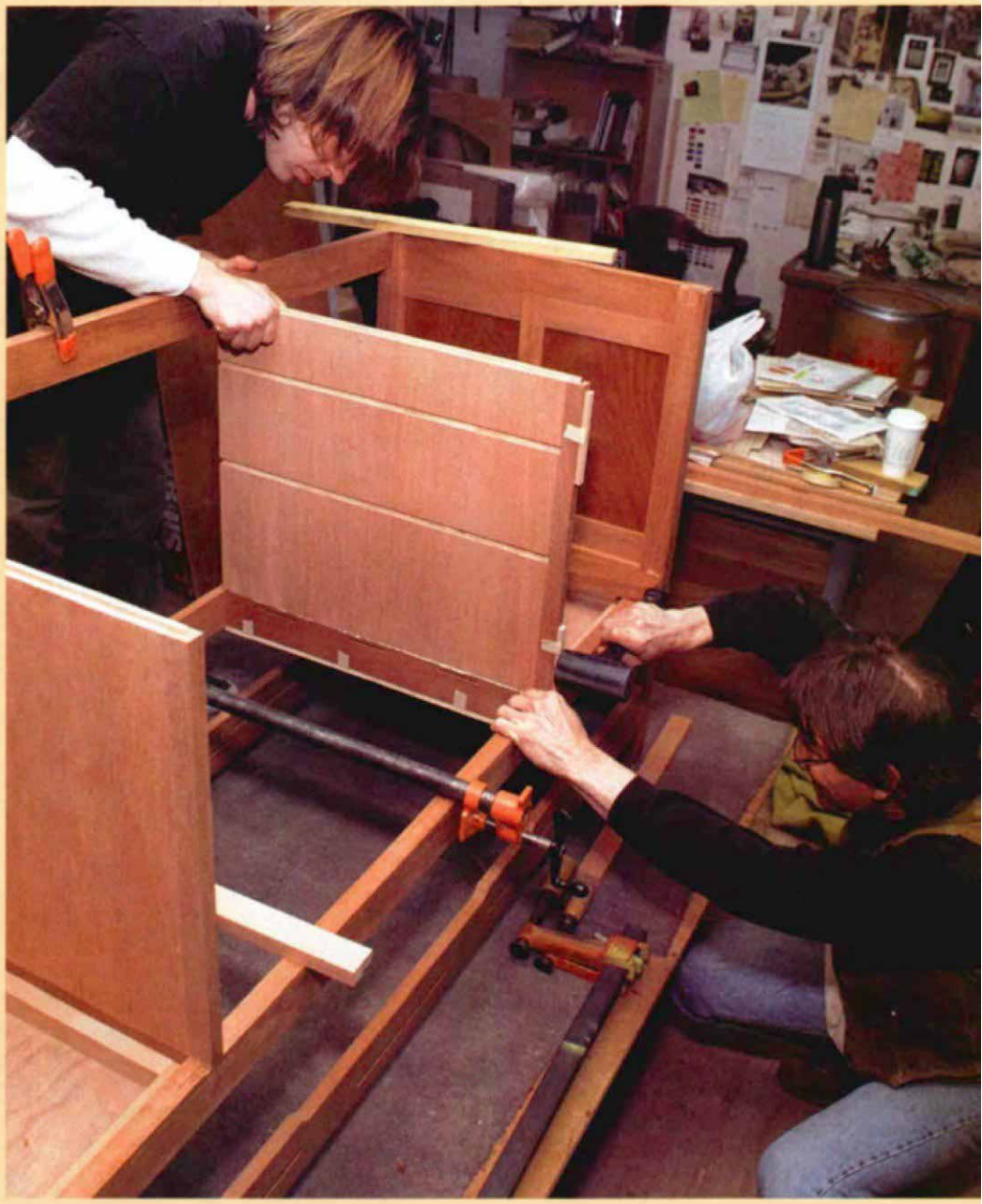

Glue divider to divider rail. *Once the grooves for the web frames have been routed, the dividers can be glued into the case. Make sure the front of the dividers are flush with the outer face of the lower front rail.*

Photos except where noted: Vincent Laurence

glued all the web-frame rails in place.

I cut dust panels out of ⅛-in.-thick mahogany plywood, but when I slid them in place, they sagged too much for my liking. To remedy this, I added rear rails to the web frames, using ⅛-in.-thick splines to attach them to the side rails (see the photo at right). I left these rear web-frame rails unglued until after the drawers had been fitted, so I would have a better view of the drawers while working on them.

Dust panel is supported on all four sides. *Because the ⅛-in.-thick plywood panel sagged when he first slid it home, the author added a rear rail to the web frame.*

Make doors and drawers of quartersawn stock

I used quartersawn mahogany for the drawer faces and doors for two reasons: the grain pattern of quartersawn stock is less flashy than flatsawn (it works better as a background for inlay), and quartersawn shrinks less than flatsawn.

I had a problem at first with the quartersawn mahogany, though. I would get tearout every time that I sent it through the planer because the grain was interlocked. I'd heard that dampening wood reduces tearout, so I gave it a shot. It worked beautifully. Just before sending a board through the planer, I dampened (not soaked) its face with a rag. This softened the fibers just enough that they could be cut cleanly with no tearout.

I was concerned about finding a secondary wood for the drawer sides, that would move at the same rate as the mahogany. I wanted a wood that was also quartersawn but wore better than the mahogany. I was fortunate to stumble across some quartered sycamore that was glorious to look at and tough enough for the job. Using the formula in Bruce Hoadley's book *Understanding Wood* (The Taunton Press, 1980), I compared the shrinkage rates of mahogany and sycamore. I found that in a board 8 in. wide—the width of my widest drawer—there was less than 1/32 in. of difference in shrinkage between the two species. I had found the right wood for my drawer sides. And sycamore is a beautiful contrast to the mahogany.

I resawed the sycamore to just over ½ in. thick, stickered it for a few days and then milled it to ⅜ in. thick. I kept the drawer sides thin to reduce the weight.

Drawers are dovetailed—I don't cut half-blind dovetails every day, so I swept the shop floor twice (okay, three times) before getting down to business. But once I started cutting them, things went smoothly. When I cut dovetails for drawers, I lay out the joints so the drawer sides are slightly proud of the tightly fitted drawer fronts when the parts are glued together. This results in easier planing and a better final fit.

I joined the drawer backs to the sides with sliding dovetails (the backs sit on the drawer bottoms). I roughed out the slots in the sides on a tablesaw and then routed them to finished size on a router table. The dovetails on the ends of the backs were cut on the router table using the same bit and height setting used for the slots. Rather than resetting the fence if the joint doesn't quite fit, take a pass with a handplane across the face of the board, and then run it by the bit again. Taking one light pass off the end grain of the dovetail also helps ease the fit.

I added drawer slips to the inside bottom edges of the drawer sides to give the edge of the drawer more bearing surface (see the drawing on the facing page). This helps prevent wear in the drawer runners. Drawer slips also are grooved for the drawer bottoms. This is stronger than grooving the ⅜-in.-thick drawer sides. Slips are notched to fit around the drawer backs.

I glued the half-blind dovetails at the front of the drawers with the back set in dry to keep the drawer square. I checked diagonal measurements inside the drawers to make sure they were the same and used a clamp to adjust the drawers square where necessary. After the glue had set, I carefully removed the backs, checked and trimmed the height of the drawer sides to fit their openings. Then I glued the backs in place, using scrap plywood in the drawer grooves to keep the back from going down too far in the dovetailed slot.

A feeler gauge helps fit the drawers—*If* the drawers go together square, half the battle is over. Fitting each drawer to its opening will be much easier. I started planing at the rear of the drawer sides and worked my way forward, fitting the drawers until they slid home smoothly. I used a long, very thin feeler gauge (available from most auto-parts stores) to let me know where a drawer was hung up. Once all the drawers were fitted, I trimmed the top and bottom edges of each of the drawer fronts to get even reveals between them all. I planed the drawer faces flush to each other last.

One final touch for the top drawer in this sideboard was to glue in a divider and a velvet bottom to protect the silverware that would likely be put in it. I glued the velvet to a thin piece of cardboard using a can of aerosol spray mount (you can buy it at art-supply stores). You'll want to use a respirator when using this stuff. Then I trimmed off the excess fabric around the edges and glued the cardboard to the plywood drawer bottom. Make sure the groove for the drawer bottom is wide enough to accommodate the extra thickness of the cardboard and velvet.

A shaped divider slides into dadoes cut in the front and back of the top drawer. I screwed the drawer bottom to the divider from below to prevent the bottom from sagging under the weight of silverware.

Breadboard ends keep door panels flat—Because the door openings are 18 in. sq., I thought two doors for each side would look better than one. Rather than using a traditional frame-and-panel con-

> "I'd heard that dampening wood reduces tearout, so I gave it a shot. It worked beautifully."

WEB FRAMES SUPPORT THE DRAWERS

Each web frame consists of a divider, or front rail, a pair of runners and a rear rail. The pieces are grooved for a dust panel.The two top frames are dadoed into the divider panels. The bottom frame is joined to the carcase with biscuits.

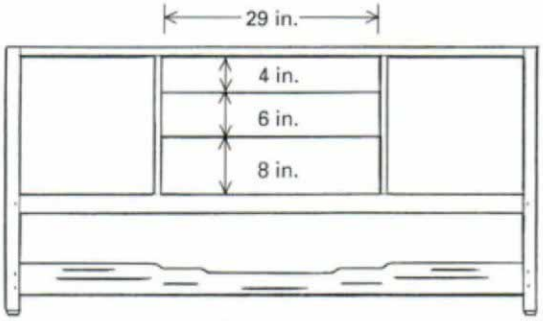

Section through carcase with plywood divider panel removed

Top rear rail

Top front rail

Drawer slips, ¾ in. sq., support the drawer bottoms and strengthen the drawer.

Dust panel, ⅛-in.-thick plywood

Kicker

Spline, ⅛ in. thick, connects rear web-frame rail to runners.

Tongues on drawer runners mate with ¼-in.-deep, ⅜-in.-wide grooves in divider panels. Stub tenons on ends of runners mate with shallow mortises in the backs of the divider rails.

Runner

Drawer fronts extend below drawer sides by about ¾ in. When a drawer is closed, the divider rail serves as a stop.

Drawer divider rail

Bottom front rail

Drawers are 21¾ in. from front to back.

Front stretcher

Rear stretcher

Bottom runners are attached to the carcase with #20 biscuits. The runners butt against the bottom drawer divider rail, which is rabbeted over the bottom front rail.

BREADBOARD-END DOORS

Breadboard ends ⅛ in. thicker than door panels keep the doors flat. Quartersawn stock ensures a minimum of movement across the door panels.

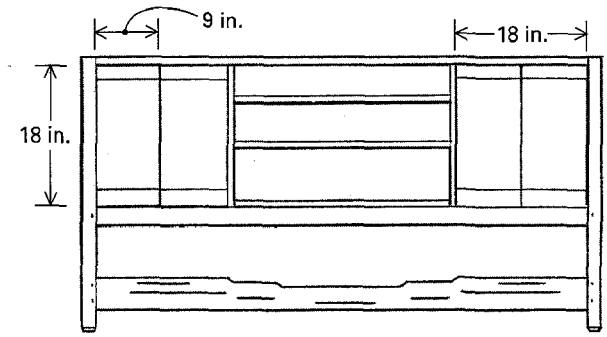

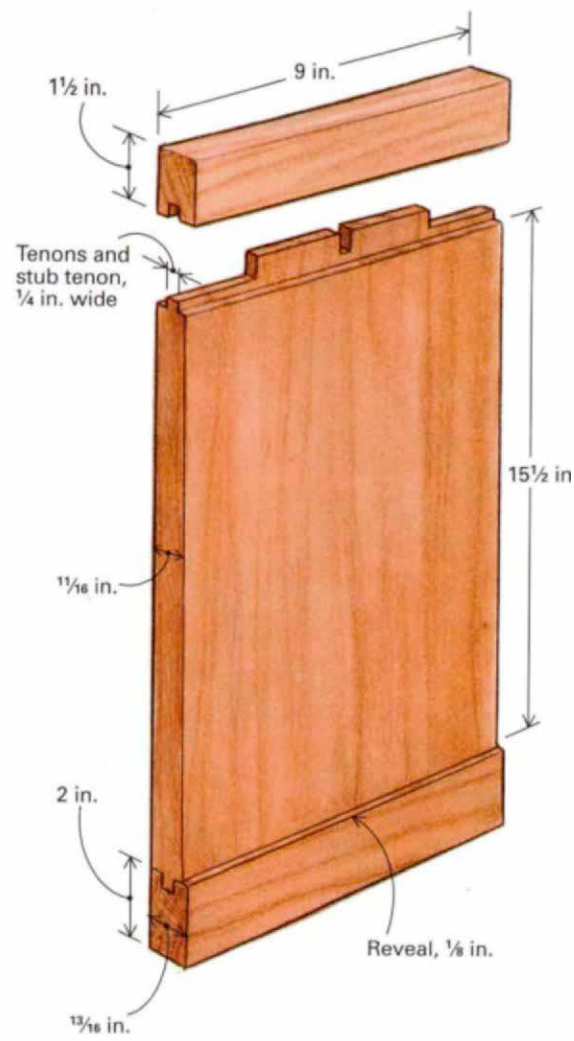

SEE ERRATA AT END OF ARTICLE

Shims of plastic laminate *keep the reveal around the door consistent.*

Tap the screw hole *with a steel screw, and then replace it with the softer brass screw.*

struction, I designed the doors as panels with breadboard ends (see the drawing above). This helps reinforce the strong horizontal lines of this sideboard and keeps the front from looking cluttered. The breadboard ends keep the panels flat yet still allow for movement, and the quartersawn mahogany minimizes the amount of shrinkage. The breadboard ends are ⅛ in. thicker than the panels to add a shadow line to the front of the sideboard.

When fitting the joints, make sure that the breadboard ends slide onto the panels with just hand pressure. Otherwise, the ends may split.

To keep the breadboard ends tight against the panels, I planed a slight concavity along their lengths. When I glued the ends in place, I used a clamp to draw in their centers. This forces the ends in tight.

One of the other advantages of dimensioning the breadboard ends ⅛ in. thicker than the door panels, besides the shadow line, is that you can hammer against this lip to disassemble the doors when you're fitting them. I used a block of scrap and held my hammer flat to the panel. The disadvantage is that you can't plane the face of the door to make it flush with its neighbor—the breadboard end gets in the way. To simplify things, I disassembled the doors and cleaned up the ends and panels individually before gluing each assembly together. Then I glued only the center 2 in. to 3 in. of the tenon and clamped the breadboard ends to the panel.

Laminate shims help set reveal—Because door rails should line up horizontally, whatever you do to the rail on one door, you need to do to the corresponding rail on the other door. I started by fitting the bottom rail and hinge side of one door to the opening. Using pieces of laminate to set the reveal, I handplaned the bottom and hinge edges of the door until the reveal was consistent. Then I mortised the door for the bottom knife hinge.

With the bottom hinge in place (but not screwed in), I trimmed the door's top rail until its reveal was consistent with the bottom and hinge side reveals. Then I mortised for the top hinge. I repeated these steps for the second door. Something to keep in mind is that if the doors don't align across their faces, you can alter that alignment somewhat by moving a hinge mortise slightly in or out Make any adjustments on the bottom rail hinge mortises where they won't be noticeable.

Before any final fitting of the door reveals, I set steel screws into the hinges. I used a Vix bit, which is self-centering, to set the screw hole center. Then I drilled the hole to depth, put some wax on a steel screw and drove it home. This cut the threads for the hole and eliminated the risk of snapping off the head of one of the softer brass screws.

When both doors were hinged and all screws had been driven home, I checked the reveal between the two doors (see the top photo at left) and planed as necessary to make this reveal the same as the others. Also, I planed a slight bevel along their mating edges so the doors would have room to open. Then I replaced the steel screws with the brass ones that came with the hinges.

Bullet catches give a positive stop—Bullet catches make a satisfying thunk

Drawings: Bob La Pointe

INSTALLING BULLET CATCHES IN DOORS

Door catches must be aligned perfectly. Bullet catches won't work unless the catch and strike plate line up precisely, so the author drills through the top rail and into the door to locate the holes for both parts simultaneously. The guide block clamped to the top rail prevents the drill bit from wandering.

Bullet catch pilot holes are enlarged separately. Using a portable drill with a masking tape stop on the bit, the author enlarges the catch and stop holes and drills them to depth. The doors should be supported when the catch holes are being enlarged.

when they engage, but they have to be placed with bull's-eye accuracy if they are to work at all. I wedged the doors firmly in place with scrap; then I drilled down through a guide block, through the top front rail, through the scrap and into each door with a 3/16-in.-dia. bit (see the photo at left above). Drilling both holes at once guaranteed that mating pieces of the catch would be aligned.

Once I'd established the location of the holes with the 3/16-in.-bit, I used a series of progressively larger twist drill bits to enlarge the holes to 1/4 in. I enlarged the holes in the door and rail separately, drilling up into the front rail and down into the edge of the door. I supported the doors when drilling the holes to avoid putting a lot of shear on the hinge screws. I used masking tape stops on the bits to let me know when I was at depth. I set the bullet catch and strike plate into their holes with a dab of epoxy and used a clamp and a wooden caul to pull them home. I applied clamping pressure very gradually because both catch and strike plate tended to resist the clamping force at first and then give way all of a sudden.

I attached door stops to the insides of the door openings with brass screws. Leather pads were set into shallow mortises in the stops with barge cement. □

Gary Rogowski designs and builds furniture in Portland, Ore. He teaches at the Northwest Woodworking Studio and is a contributing editor to Fine Woodworking *magazine.*

Next issue: inlay, pulls and handles

In the next issue, Gary Rogowski completes this sideboard. After describing the construction of the top and back rail, he focuses on carved inlay, pulls and handles. An article in the previous issue explained the construction of the carcase.

Erratum—A drawing showing parts for a door on Gary Rogowski's Arts-and-Crafts sideboard included an incorrect dimension *(FWW#126,* p. 82). The door panel should be 14½ in. tall, not the 15½ in. that's shown.