The Torsion Box

How to make strong, light and stable panels

by Ian J. Kirby

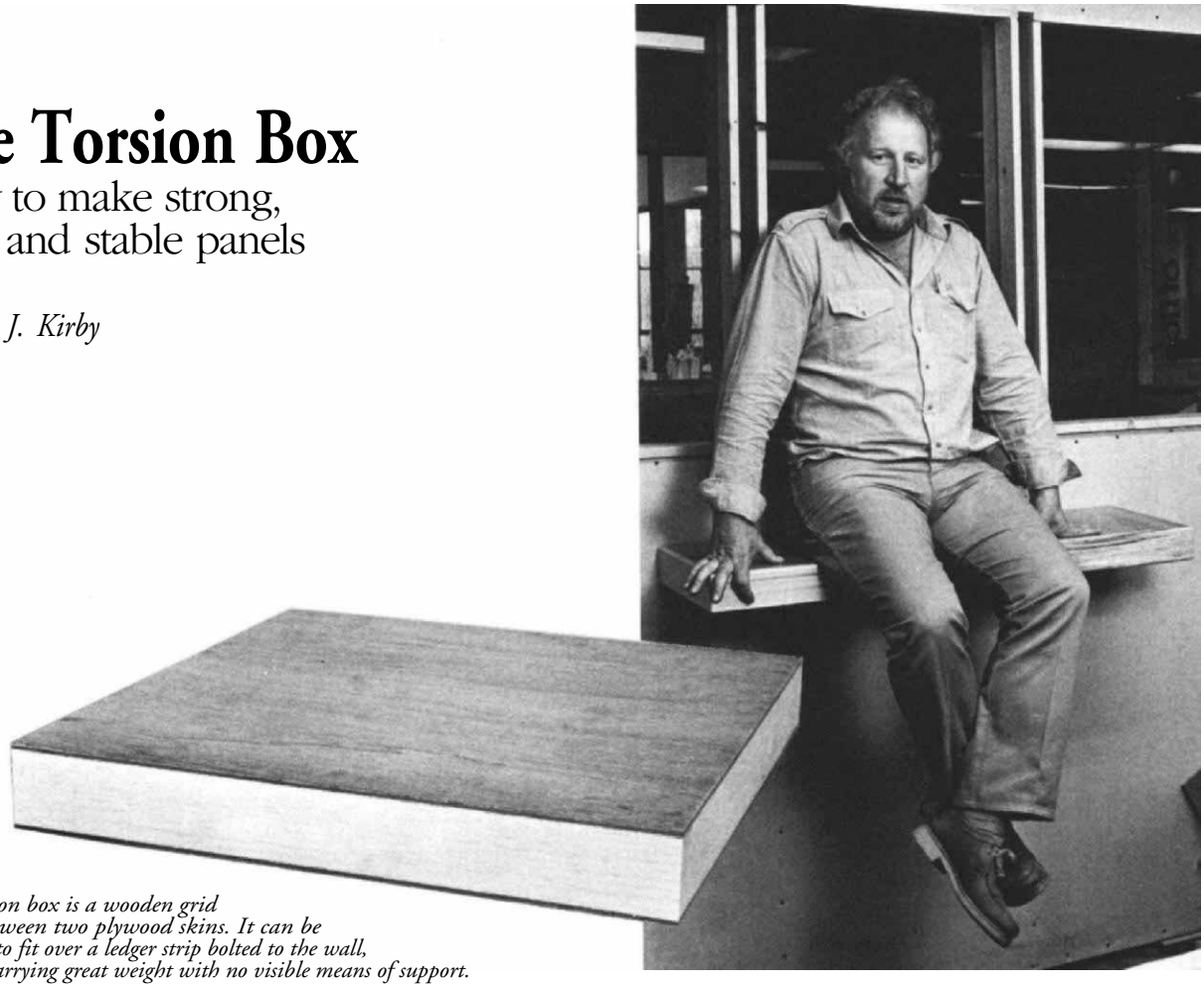

The torsion box is a wooden grid glued between two plywood skins. It can be designed to fit over a ledger strip bolted to the wall, thereby carrying great weight with no visible means of support.

Suppose you wanted to make a low bench about 18 in. wide and 4 ft. long, cantilevered out from a wall with no supporting structure underneath. In solid wood, you'd have to use a plank 2 in. thick or thicker, so this simple bench would consume at least 12 bd. ft. of wood, and it would weigh 40 lb. or more. Then you'd have the devil's own tussle figuring out how to hang it on the wall.

If you used a torsion box, you could make the same bench from less than 3 bd. ft. of wood and 12 sq. ft. of ¼-in. plywood. It could be any thickness you wanted, it would weigh about 10 lb., and it would be child's play to cantilever it from the wall. The torsion box is especially suitable for building high-quality veneered furniture, because it's both lighter and more stable than a conventional lumbercore structure. It's probably the simplest way to make a curved panel, and the ease with which the designer can manipulate the thickness dimension is truly liberating. At the same time, the torsion-box system is well within the technical reach of the amateur craftsman and the small professional shop.

As used in furnituremaking, the torsion box is two thin skins of plywood glued to a core grid of thin wooden strips. The resulting structure has strength not present in either the skin or the core alone—it's strong the same way an airplane wing is strong. In particular, a torsion box has tremendous resistance to twisting and bending forces. This is because the structure's geometry converts any applied force into shearing stress on the glue lines between skin and core grid. And a sound glue line is strongest in its resistance to shearing stress.

Consulting editor Ian Kirby teaches woodworking and furniture design at Kirby Studios in North Bennington, Vt.

The concept behind the torsion box isn't new. Engineers use it for box beams as well as for airplane wings, and the same concept makes possible the structural steel I-beam. The system described here was developed in Europe during the 1960s for the manufacture of large wardrobes and other case goods for storage. The traditional way of making a wardrobe is to join four pieces of wood at the corners, firmly attach a back, and hang doors on the front. Although the back contributes a great deal to rigidity, the front corner of a 6-ft. wardrobe can still be lifted several inches off the floor with the other three legs remaining on the ground. Any unevenness in the floor will thus twist the case, jamming its doors and drawers. If a torsion box is used to make the back or sides, they will be absolutely rigid, and the rest of the wardrobe, if firmly attached to the torsion box, will also be rigid. The furniture industry hasn't made much use of the system, even though its applications extend far beyond keeping wardrobes free from twist. It can be used in practically every furniture form—storage cases, shelving units, tables, beds and all forms of seating, upholstered or not.

The torsion box is not a shoddy alternative to solid wood. It opens up design possibilities that simply cannot be achieved in solid wood. In the solid, you can usually find a board that's long enough, and the width can be glued up, but the thickness dimension is pretty much limited by weight and commercial availability to 2 in. or less, and you cannot eliminate wood movement. In terms of workmanship, the torsion box is fully as demanding as working in solid, and the result can be furniture of the highest quality. In fact, making a torsion box

Drawings: Ian J. Kirby

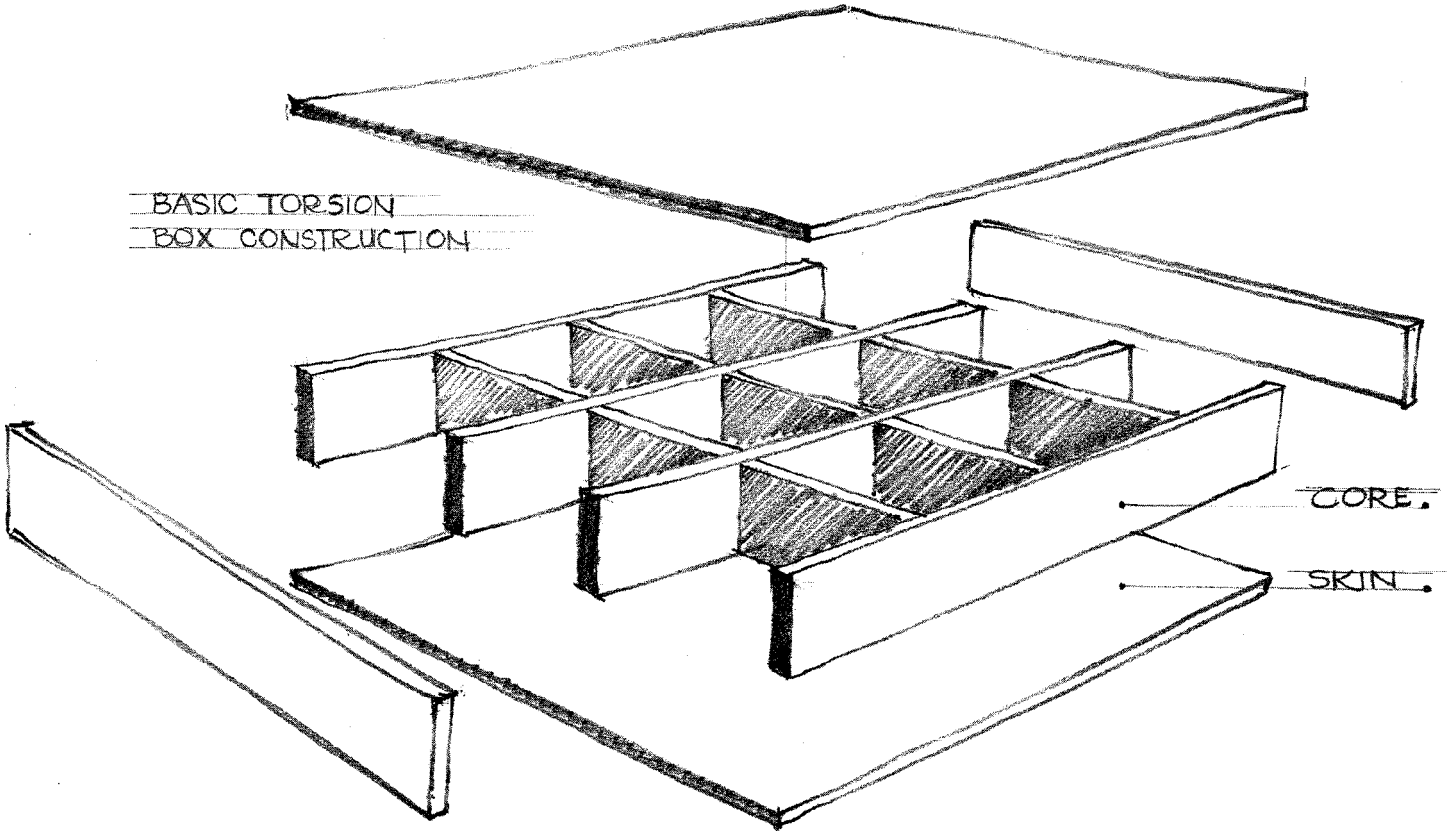

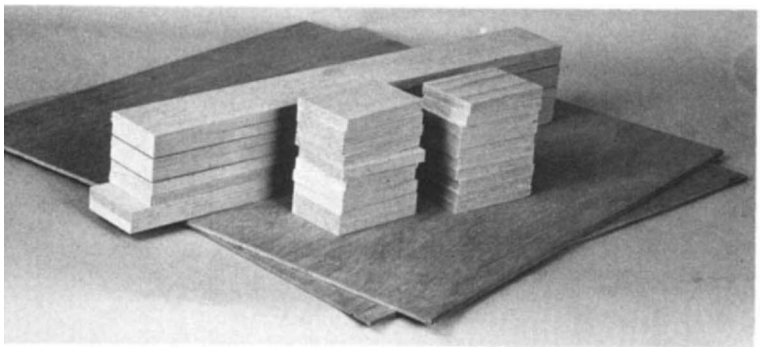

Here is the basic method for making a torsion box. Prepare stock for the skins and core (above), in this example ¼-in. plywood and clearpine sawn ⅜ in. thick by 2½ in. wide. Ordinary staples hold the core together until the skins can be glued on. Start with the outside pieces (right), and the long strips, then fill in the grid (below, left). Run a bead of white or yellow glue on one side of the grid (below, center), roll it out well, and carefully position the skin. Then flip the box over on top of the bench and clamp it down, using curved cauls to distribute the pressure (below, right). Unless you are using a veneer press, it's unwise to glue both skins at once.

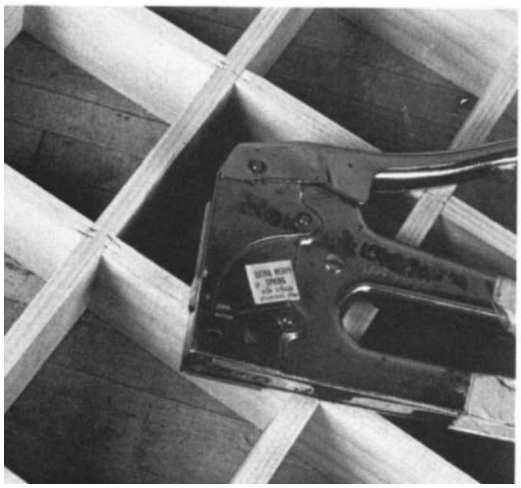

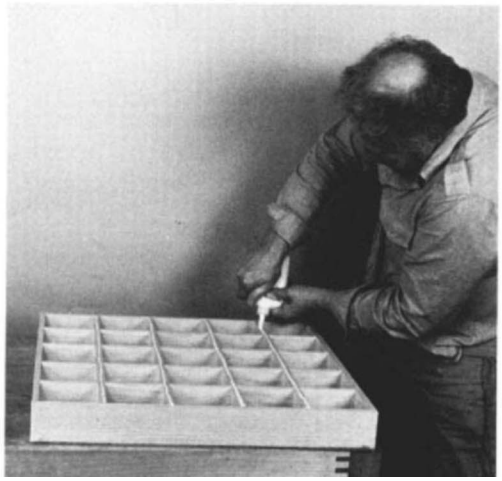

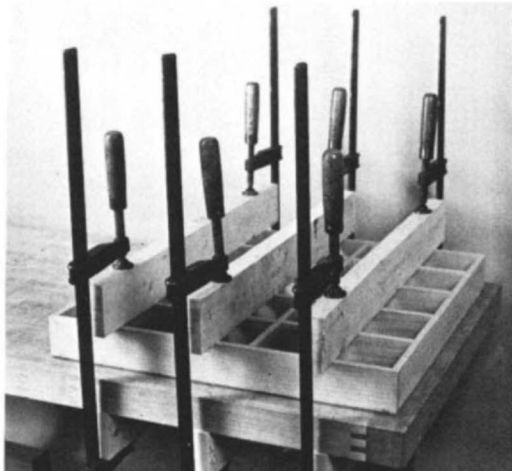

requires more thorough planning than working in solid wood, for once you've glued up the box, you cannot change your mind and trim a half-inch off. There's no room here for inadequate design planning or for sloppy workmanship—quite the opposite.

A sample panel—The photo sequence on p. 97 and the following discussion are based on making a sample panel that's 2 ft. square and 3 in. thick, using ¼-in. veneered plywood for the skins and ⅜-in. by 2½-in. softwood for the core. The panel might be for a tabletop or for a shelf—it doesn't matter. The point is to establish the working principles involved. Once you understand the system, you'll see that the core grid and the resulting box can be virtually any shape you want, according to what your design requires. Later on I'll discuss surface and edge treatments, ways of joining two boxes together, and how to attach a torsion-box structure to a wall.

For the core we should use wood of practically any clear species, from poplar to maple, even pine, at 6% to 8% moisture content. But don't mix species in any one core. Differences in shrinkage can make the panel wavy. The thickness of each strip is as much a function of handling as of anything else. We could cut it down to ⅛ in. thick and build the grid on 2-in. centers, but we'd waste a lot of wood in sawdust. We'd also have trouble keeping the 24-in. long strips straight in one direction, and even more trouble handling 121 bits of wood, each 1⅞ in. long and 2½ in. wide, in the other direction. Even so, we could make a 4 sq. ft. core grid from 1½ bd. ft. of stock (not counting kerf losses), the 2-in. spacing would be enough to keep the plywood skin from sagging into the voids in the grid, and there would be about 78 sq. in. of gluing surface on each side—the panel would be plenty strong. If we make the core stock ⅜ in. thick, the strips won't be as numerous or as flexible. Spaced just over 4¼ in. apart, we'll have a 2-ft. square that still consumes less than 2 bd. ft. of material. There'll be 108 sq. in. of glue surface on each side, more than enough. At this point in the analysis we might decide that the grid spacing is too great for ¼-in. plywood, especially if it is to be veneered and used for a table. To keep the skin from dishing into the core voids, we could add a couple of core strips, or use ⅜-in. plywood for the skin instead. There is no hard rule—you decide according to the materials and the ultimate use of the box.

Whatever dimensions you choose, all the core material must be accurately prepared: it must be flat, uniformly thick, and cut off squarely. Both the width and the thickness can be got with a carbide-tipped saw, but it's better done through the thickness planer. Both skins should be made the same size, with their corners truly square, to the finished dimensions of the panel. The core grid, on the other hand, should be made a trifle large, say 1/16 in. over in length and width. Then after assembly it can be planed to meet the skin exactly.

If the finished box is to be veneered, the veneer should be glued onto the skins before they are cut to size. It's bad practice to veneer the assembled box, because the pressure of the press will tend to force the glue away from the core grid, making it puddle up over the voids. The box might end up looking like a lumpy checkerboard.

Joining the core grid—There are no joints in the core grid. The pieces are simply stapled together across the joint lines, top and bottom. Start by stapling together the four outside pieces, then run all the long strips in one direction, using crosspieces as spacers. Hold each piece firmly in place and staple. When all the long strips are stapled on one side, turn the grid over and staple the other side. Then fill in with the crosspieces. It's natural to imagine that staples can't possibly hold this thing together, that some joint must be necessary. Actually, the staples don't hold anything together. They merely stabilize the grid so it can be handled until the core can be glued onto it. The glueline between core grid and skin is what holds the box together. You would have to apply enough force to shear all that gluing surface before any core joinery would come into play.

Having now got the two skins cut to size and the core assembled, the next step is to put the three parts together. Any normal wood glue will do the job; I find it easiest to squeeze white or yellow glue along all the core edges, then to spread it out with a 1-in. paint roller. It is important to wet the entire surface of the core grid, since the skin goes onto it dry. Plant the skin on the core, register one long edge, then align an adjacent edge. If the core seems out of line, pull it into place using the skin as a try-square. Once one corner of the assembly is aligned, the rest of it will be aligned too. You can drive a couple of veneer pins or small brads through the skin into the core to hold it in place. Clamp or press the skin onto the core until the glue cures, then turn the box over and glue the second skin in place, being sure to work from the same edge and corner you aligned on the first side.

A veneer press is the ideal tool for gluing up the box, not because of the pressure it can exert, but because its bed is flat. In whatever shape you hold the torsion box while the glue is drying, that will be its final shape. If it is twisted while it cures, it will stay twisted forever. The veneer press also makes

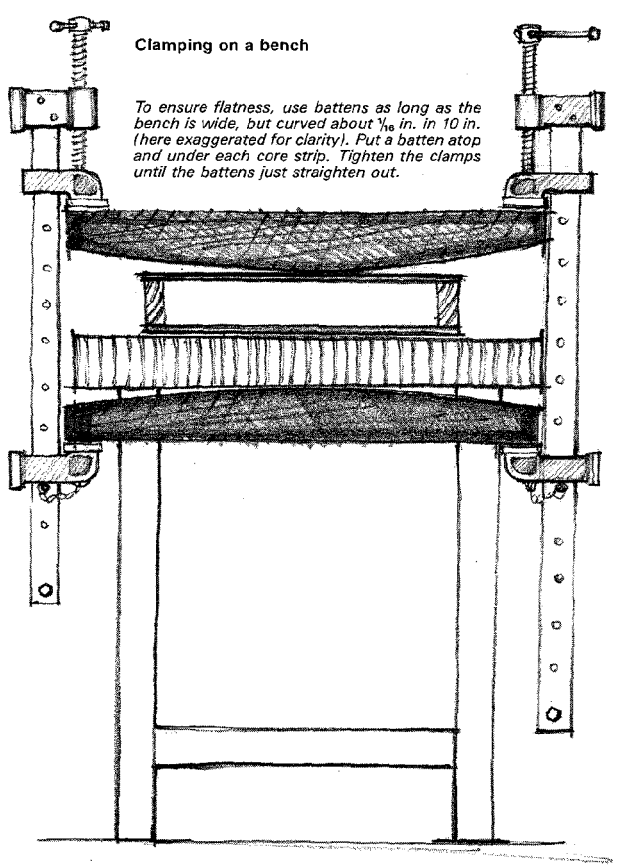

it practical to glue both skins onto the core at one pressing.

The best alternative to a veneer press is the top of your bench, but check it for flatness before you spread any glue. You can clamp the core to the panel (panel flat on the bench top) with standard quick-set clamps, as shown on p. 97. Use cambered battens to distribute the pressure. Be sure the clamps themselves don't twist the bench top; don't, for example, anchor clamps to the bench's understructure. The appropriate method is determined by the availability of a press or of clamps and a flat surface, and by the geometry of the workpiece. The important thing is to understand what has to be achieved and to respond accordingly.

When the glue has cured, unclamp the assembly, clean off the glue squeeze and plane the core to the size of the skins. To assess the strength of the box you've just made, clamp one edge in the vise, grab the top corners and try to twist it.

What we've done up to this point is make the basic building brick of the torsion-box system. In order to use the system we must consider how to join two or more boxes together, and how to finish their surfaces and edges. These considerations are part of the design process, not afterthoughts, for most joining methods require some provision in the construction of the core. When you understand the system, the possibilities are limited only by your ingenuity.

Surfaces and edges—The torsion box is well-suited to the application of quality veneers and to the quality cabinet-making techniques that go with veneering. As I mentioned earlier, it's best to veneer plywood skins before you assemble the box. There is nothing wrong with using pre-veneered plywood—the only drawback is that your choice of veneers is restricted. Applying your own veneers gives you easy access to the ebonies and rosewoods and other exotic species that can no longer be had in solid wood. I'll discuss veneering techniques in future articles.

Whether you apply your own veneer or use pre-veneered plywood, the edge of the torsion box needs to be finished. The most direct solution is to glue a solid wood lipping to the core, of the same species as the veneer or some contrasting species. Mitered corners always look good. If the lipping is to be flush with the surface of the box, it can be registered with a spline or a Lamello, or else it can be milled a little wide and planed flush after assembly. If the lipping must bear a load, a hinged door for example, it should be reinforced with a spline or tongue-and-groove. Grooves can be milled directly into the core of the box, and tongues onto the lipping stock. Of course the lipping can be shaped to virtually any profile. When the surface is an exotic veneer, you can make lipping stock by gluing three or four veneers together.

With the torsion box system, there is no reason to confine your design universe to wood. The stability of the skin allows you to cover it with virtually any sheet material. Thus you can develop your design with the colors, textures and properties of paint, leather, Naugahyde, cloth, Formica, ceramic tile, slate, metal tile or even sheet metal. There are special adhesives available for most of these materials. Tiles can be laid with adhesive and grouted. A traditional way to attach sheet copper is with decorative nails. Leather and Naugahyde are best stuck down with white glue. *(continued, next page)*

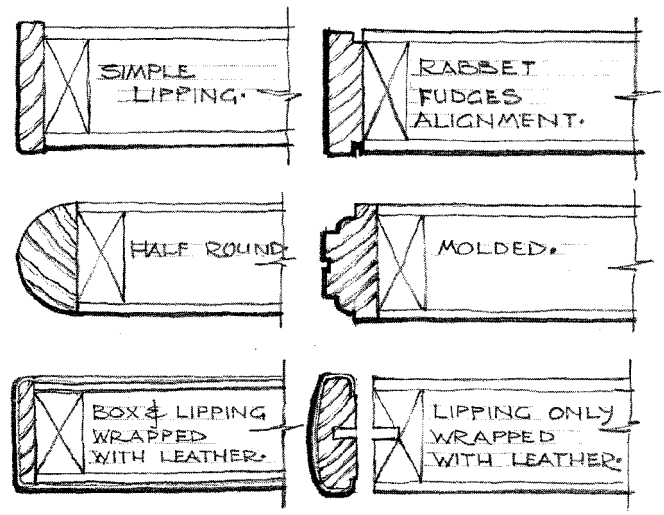

Rich Lippings

When the box is veneered, a leather-covered lipping will be quite rich in look and feel. An upholsterer would make up lipping stock by driving nails through one strip of wood, then gluing a second strip atop the nailheads to capture them. Trim this sandwich to width, profile its edges, glue the leather around it and then hammer it into position.

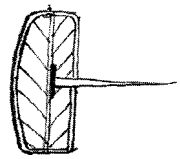

When the box is covered in leather or Naugahyde, neatly wrapping the corners can be most difficult. You can avoid the grief if you trim the leather exactly flush with the edge of the box, then glue on a solid wood lipping whose width is the thickness of the box plus surface material or even slightly wider, so it stands proud of the surface. The job will be especially rich if you make the lipping as wide as the panel is thick without surface material, then plane the panel's top edge down by the thickness of the leather or Naugahyde. This planed margin should be about **1½** in. wide; it can be planed flat or round as shown. Glue on the surface material, trim it back flush, and use a spline to locate the lipping flush with the leather surface.

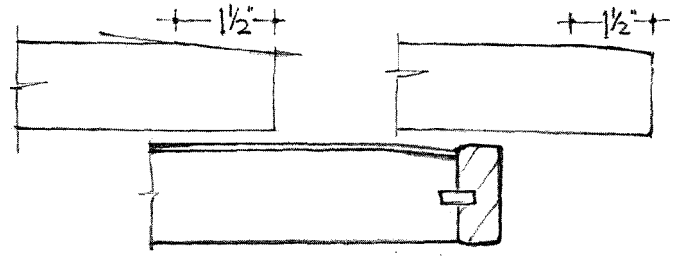

Joinery—The simplest way to join two torsion boxes edge-to-edge is to butt them together with glue. To keep the surfaces in line, use a loose spline or a Lamello spline (figure A). If you're in any doubt at all about the ability of the core to support the joint, double up the core stock in the joint area when you design the box.

A butt joint can also be used to join two boxes with their skins at right angles, as shown in figure B, but usually the core stock must be made doubly thick at the joint. The result will probably be more attractive if the skin of one of the boxes overhangs its core, so it can conceal the joint. Splines can be used to register the parts.

Alternately, the mating edges of the boxes can be mitered and glued (figure C), although once again enough stock must be provided for the miter cut when you are designing the box. The miter is especially strong in this application, since the core strips both present long-grain gluing surfaces, not a near end-grain surface as is usually the case in solid wood. Some form of register is vital, and again a spline will serve.

There's a slightly different strategy for forming a right-angled joint with one box in the middle of another, for example a bookshelf or a wall system. It's best to glue and screw a ledger strip onto the surface of one box (the screws going into a core strip), and to build a pocket into the other box (figure D). The pocket then slips onto the ledger strip. It can be glued in place for permanency, or screwed. The lippings on the boxes will conceal the ledger.

Finally, an intermediate piece of solid wood can always be used at a corner, with the edges of the two boxes glued directly to it, as shown in figure E. *(continued, p. 102)*

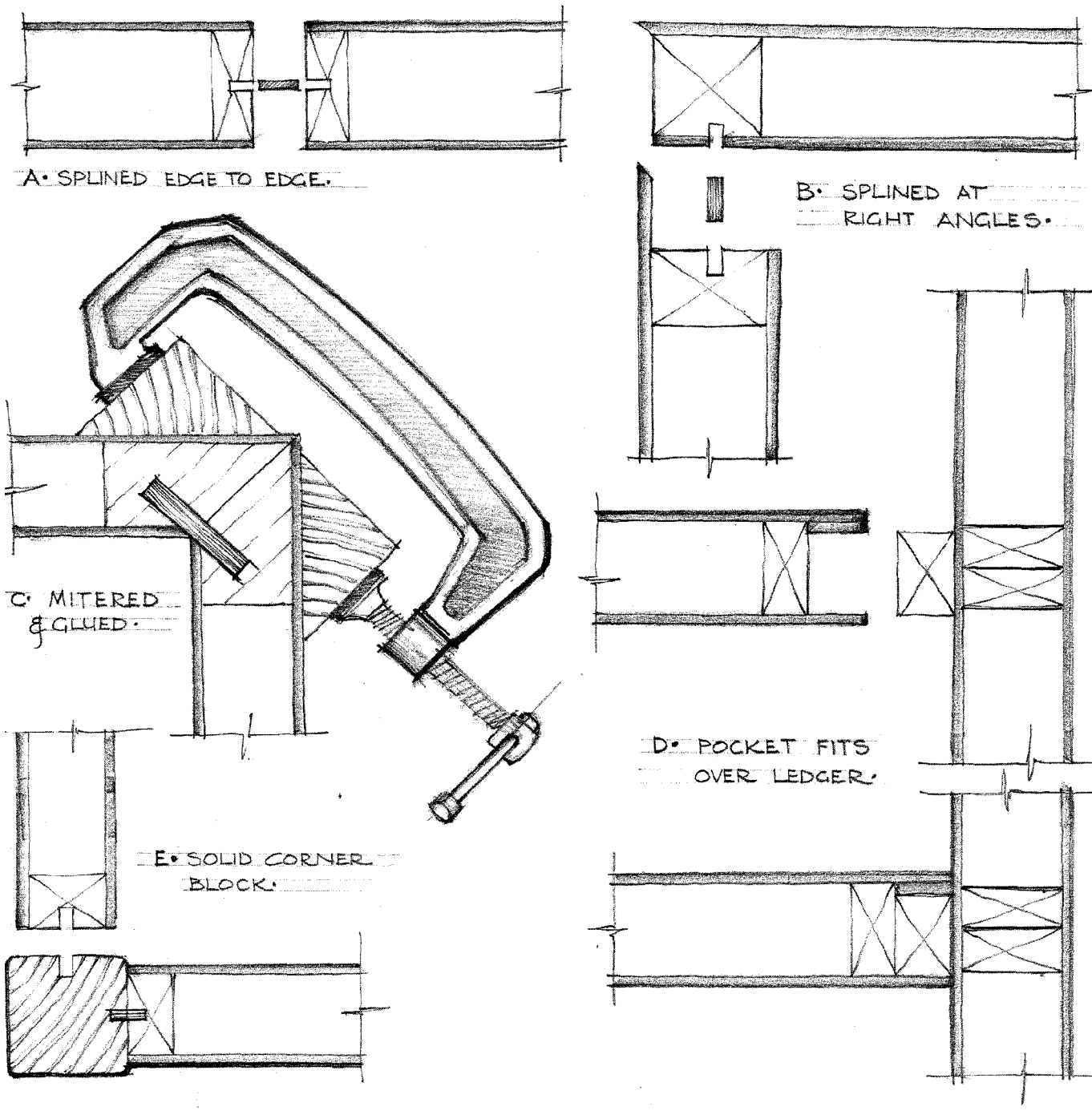

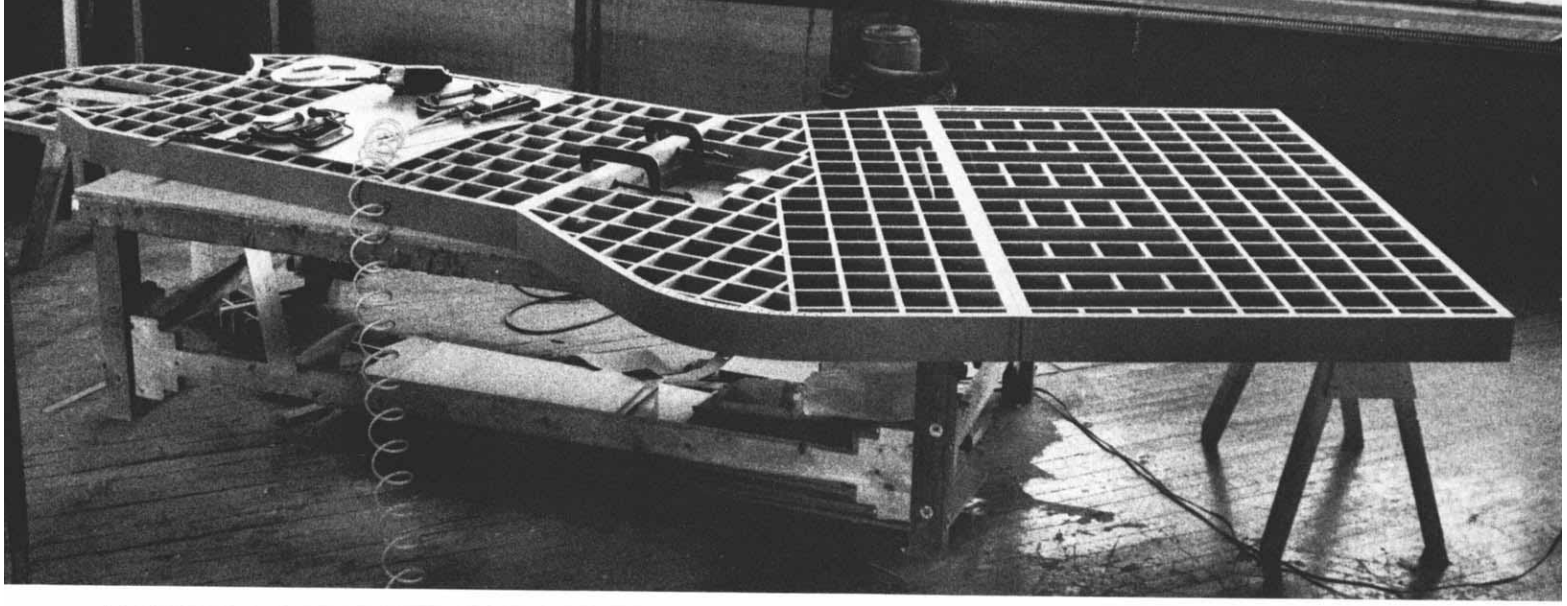

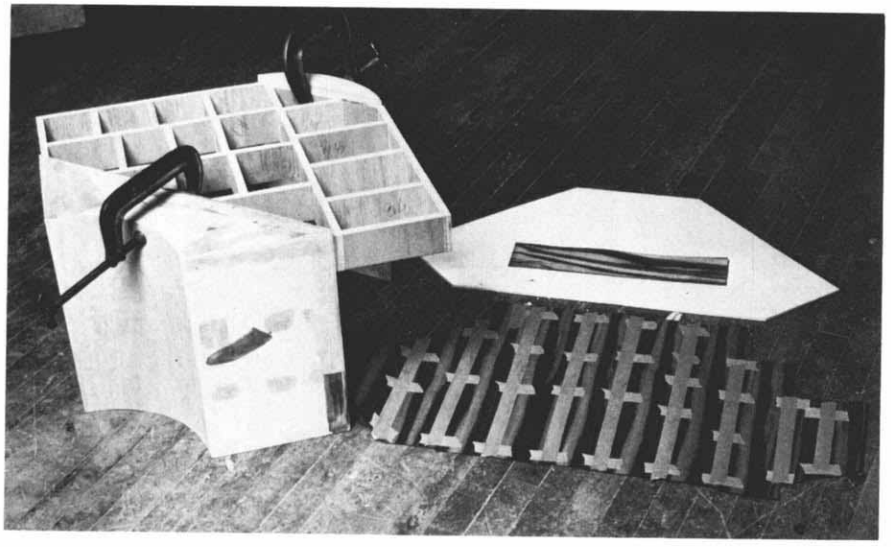

Some applications of the torsion box, from work done at Kirby Studios.
Top: Three-part core grid made of medium-density fiberboard is 4 in. thick, 6ft. wide and almost 15 ft. long. Designer-maker Mike Garner skinned each grid with ash-faced plywood, to build a trading desk that had been commissioned by a commodities investment firm.
Center: This four-module coffee table, shown in two of its many arrangements, could hardly have been built in solid wood. As the photo at left shows, each module consists of three torsion boxes. The flat top is veneered with Macassar ebony, the curved verticals are painted. Designed and made by Jim Van Etten (© 1981).
Bottom: David Schwartz joined his table by screwing ledger strips onto the vertical torsion boxes. The strips plug into sockets constructed into the box that is the tabletop.

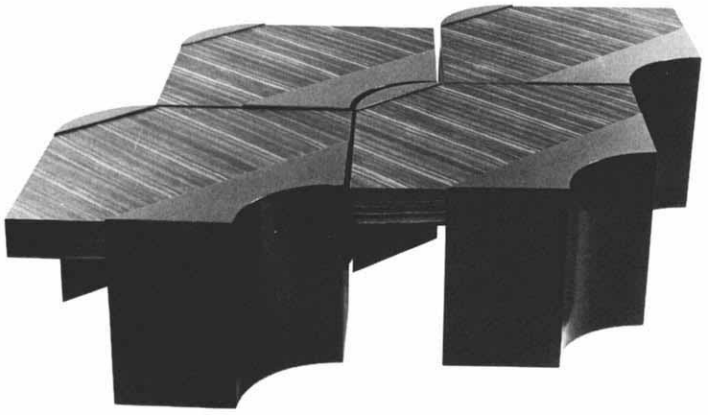

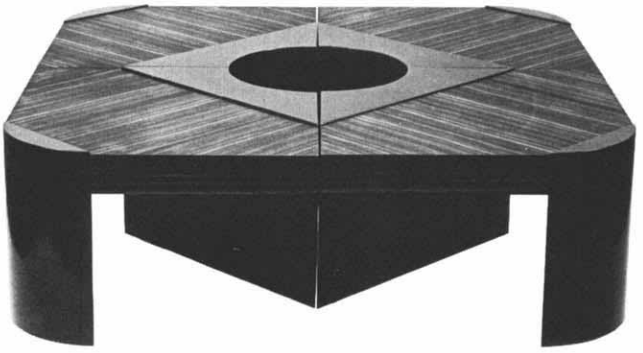

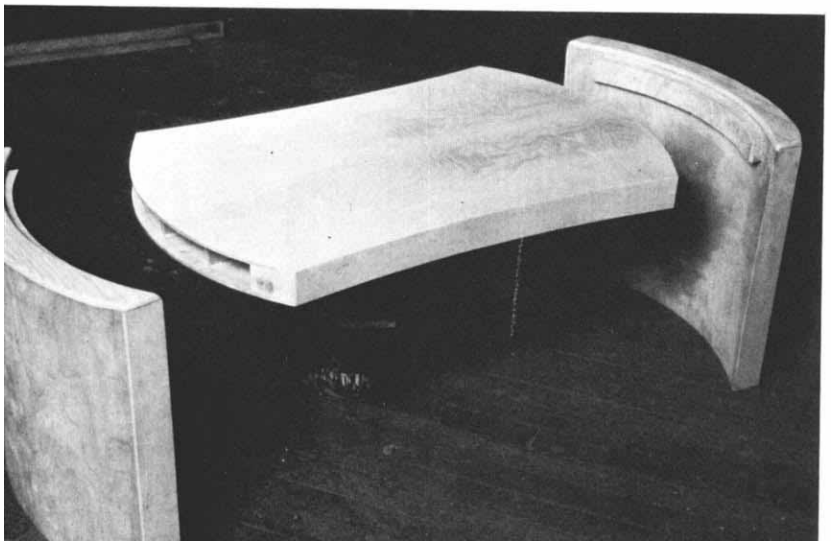

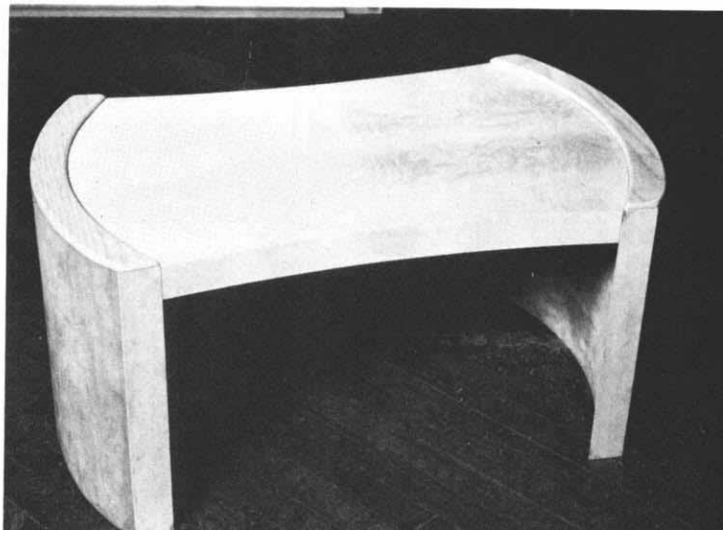

Wall mounting—One of the attractive characteristics of the torsion box is the way it can be fastened to a wall and made to hold considerable weight with no visible means of support. The usual method is to bolt or screw a ledger strip to the wall, and to construct the box with a pocket at its back edge that exactly fits over the ledger (A). Screws hold the box to the ledger. Thus the whole thing can be removed from the wall. Or the box can be glued to the ledger, in which case the fixture is permanent (B).

The ledger should be a piece of clean, knot-free wood, preferably hardwood. The way it's fastened to the wall depends on the load it is likely to bear—No. 10 screws 1½ in. into the studs will support a telephone, but seating or shelves for such heavy loads as a television set may require bolts right through the studs. Use 2-in. Rawlbolts into masonry walls. Where the shelf goes into a corner, ledgers should be attached to both walls. Screws through the top skin into the ledger hold the box in place, but if the top skin is ¼-in. plywood it had better be doubled or trebled inside the pocket. Gluing extra thicknesses of plywood inside the flange that fits over the ledger will minimize the risk of the screws tearing out under load (C). This thickness may also permit countersinking and plugging to conceal the screws.

When you wish to eliminate any visible trace of holding screws but still want the box to be removable, you can profile the ledger with a dovetail as shown at D.

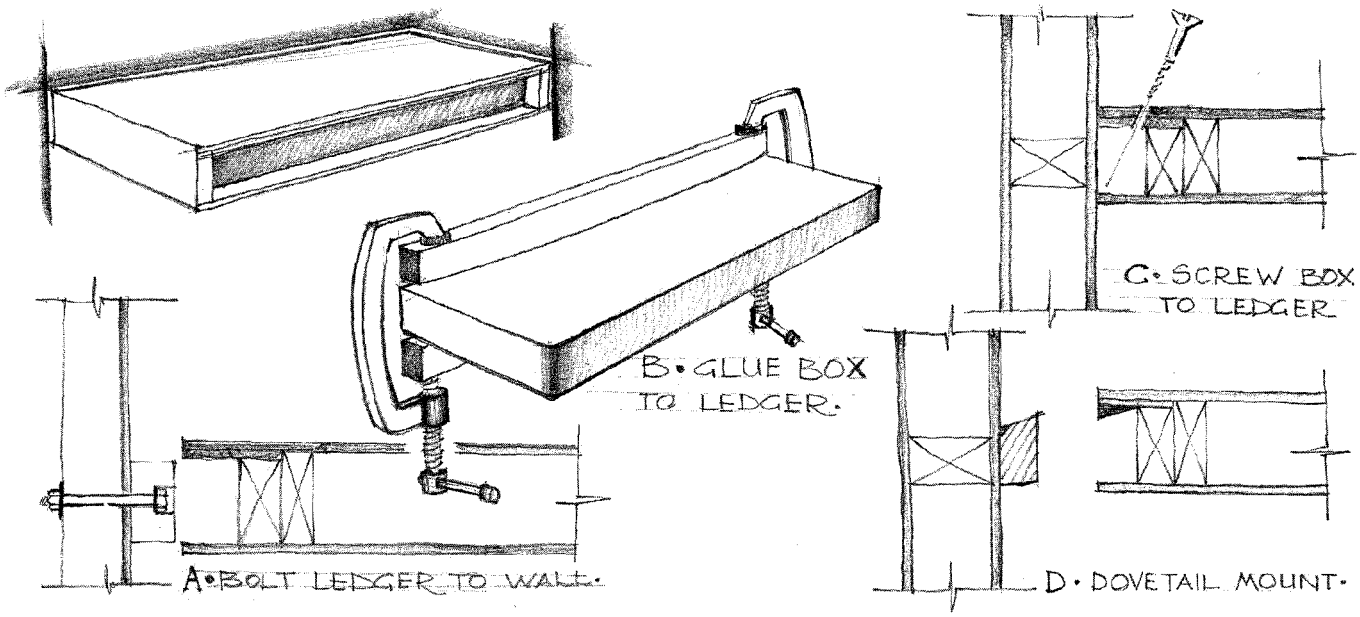

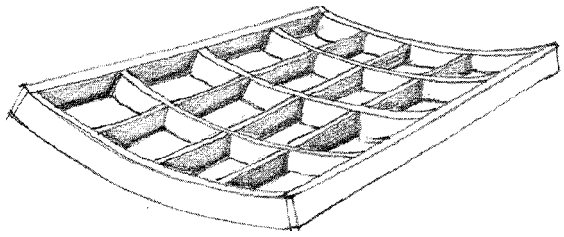

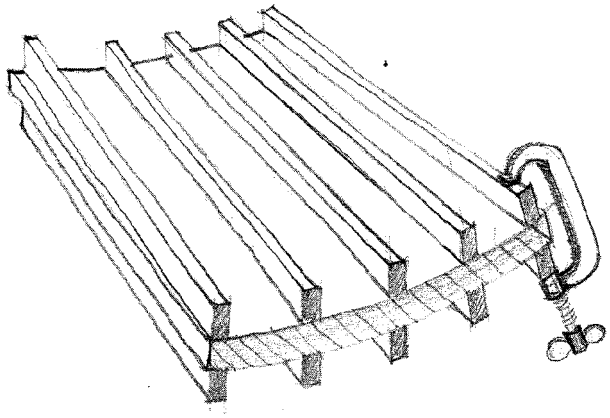

Curved panels—It's relatively simple to make a torsion box that's curved in one plane, such as for a chair seat or back. The method is to draw the curve full-size, then to cut out as continuous strips the core elements that form the curve. Don't try to use short curved pieces between continuous straight pieces, for they would be impossible to align. The outside straight pieces should also be continuous and attached to the end-grain of the curved pieces. This will aid in alignment and will also keep the core from twisting before the first skin is applied. It's best to skin the convex side first—if the finish is to be leather or paint, the skin can be glued and stapled or nailed. If the skins have a show veneer already, they'll have to be glued with the aid of battens and clamps. The battens should be slightly cambered, say 1/16 in. for every 10 in. of length. Place the battens in pairs, one over the other with a core strip between. Hardboard between the veneer and the battens will spread the pressure and keep the skins from scalloping.

In sum—The torsion box ought to be thought of as a building block within a system. In fact, the torsion box is the counterpart in man-made sheet materials, of the frame-and-panel in solid wood. Both are systems that have developed in response to the dimensional instability of wood. Either system brings its own limitations and liberations, but these depend mainly upon the designer-woodworker's imagination. ❑