Swing-Arm Lamp

A contemporary swiveling lamp with a few cool tricks

BY CHRISTIAN BECKSVOORT

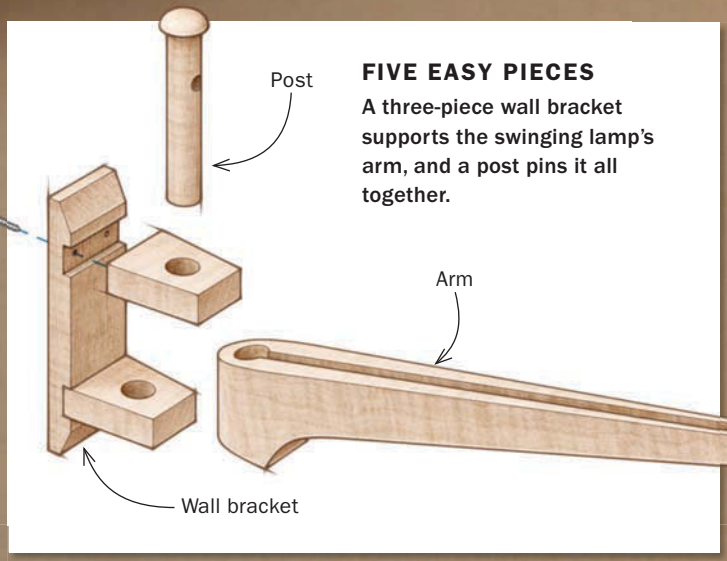

FIVE EASY PIECES

A three-piece wall bracket supports the swinging lamp's arm, and a post pins it all together.

Photos: Anissa Kapsales; drawings: Christopher Mills

When I was growing up, my parents had a Scandinavian swinging-arm lamp over the couch. It hung right in the middle, so when I was reading on either end of the couch, I could swing the lamp left or right as needed. I forgot about it for a few years, but it had more influence over me than I realized. In 1974 I bought the book *Woodenware* by Åke R. Nilsson (Drake Publishers, 1973) and discovered his simpler version of the swinging-arm lamp.

I've since made a variety of wall lamps, most in cherry, and most with wooden shades, and I've changed shapes and dimensions along the way. The most recent versions I've made are in tiger maple and have glass shades custom made by Tandem Glass of Dresden, Maine. But you don't need a custom glass shade to make this lamp shine. There are a ton of websites as well as hardware stores big and small that carry beautiful glass shades. Playing with different wood species, arm shapes, and shades is fun and can really change the look and feel of the lamp. The design is simple, so select a species and grain to suit.

Begin with the arm

To make the arm, start with a piece of 8/4 stock, 2½ in. wide by 17 in. to 18 in. long. The arm will be tapered in thickness, from 1¾ in. at the post to ¾ in. at the tip, but I do all the other machining before cutting the taper. First, use a template and trace the pattern onto the side of the arm blank. Then bandsaw the underside of the arm and the curved nose on the front end.

The arm slopes up about 12° from horizontal. To establish and maintain that angle, make sure that the flat section at the base of the arm is exactly 90° to the back edge. Next drill the ⅞-in.-dia. hole for the post, being sure that the base of the arm remains perfectly flat on the drill-press table. A spacer block to support the arm or a wooden hand screw clamp can help with this. Now draw the radius at the back edge of the arm. Cut the curve with the bandsaw and refine the shape with sandpaper (I use the disk sander), being sure to maintain the 90° relationship between the base and the back edge. I also refine the roundover at the front end of the arm at this point.

At the router table, cut the groove for the wire along the top of the arm. Then use a hand drill to cut an angled ¼-in.-dia. hole about ⅝ in. to ¾ in. from the front. The wiring will run in the groove and drop down through this hole to the light fixture.

Now it's time to cut the arm to a taper. With a straightedge and pencil, establish the angle on both sides of the arm from the back edge to the nose. Bandsaw both sides and then sand or plane them smooth. Then smooth all the faces of the arm, breaking all edges, and hand-sanding to 220 grit.

Arm yourself

The arm is the focal point of this lamp and where most of the work is.

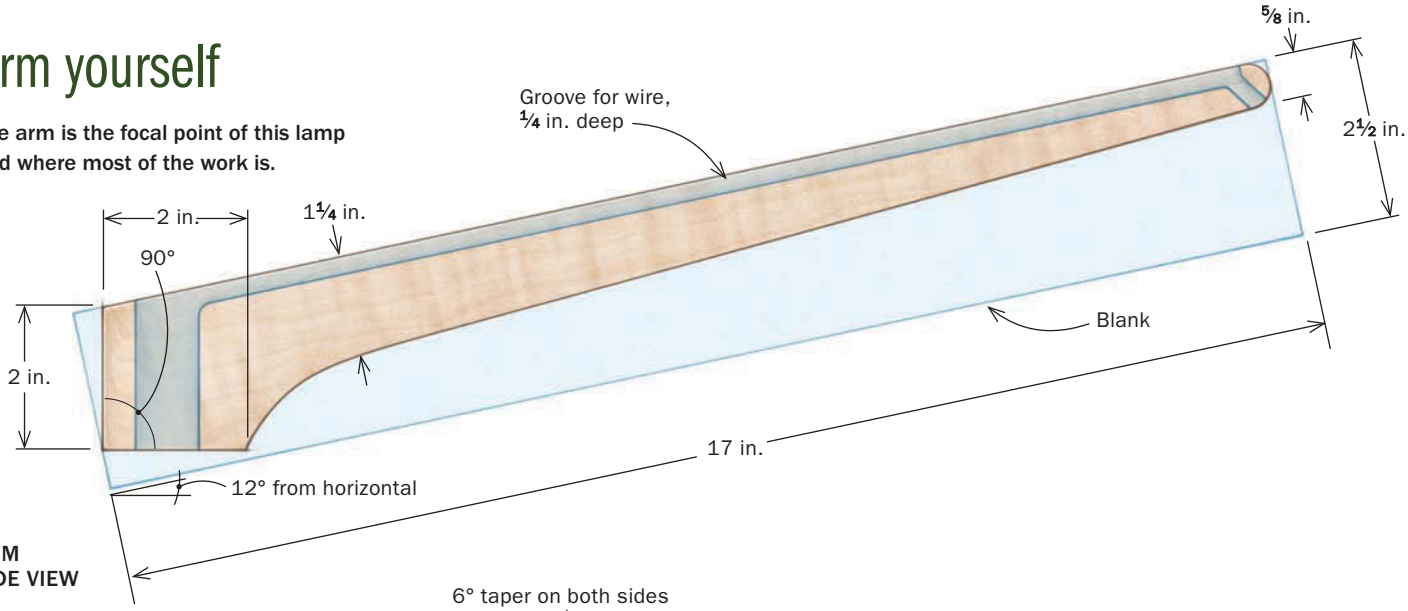

ARM SIDE VIEW

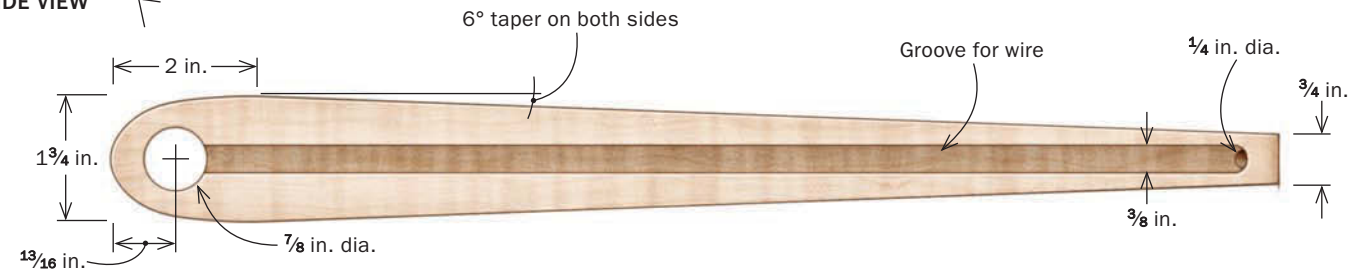

ARM TOP VIEW

Drill the post hole. *After bandsawing the arm's bottom edge to shape, take it to the drill press and drill the hole for the post.*

Groovin'. *At the router table, run a stopped groove for the wiring along the top of the arm. It should start about 3/4 in. from the front and end in the post hole.*

Drill an angled hole at the nose. *Toward the front of the arm, in the groove you just cut, drill an angled hole to feed the wire through. The angle creates a subtle bend for the wire to follow.*

Taper the sides. *A 6° taper on both sides of the arm gives the lamp a lighter, more refined look and feel.*

Wall bracket keeps it all together

A vertical back plate with two horizontal members attaches to the wall and holds the arm in place.

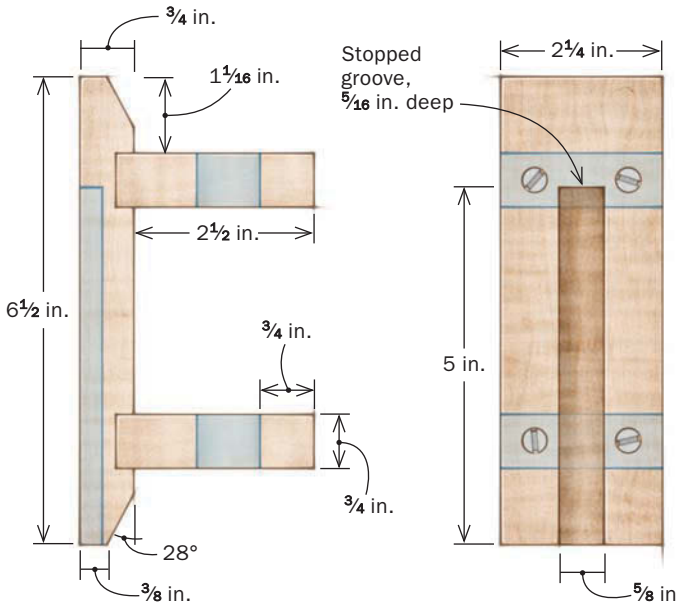

Dadoes for the horizontals. *After you cut a bevel on the top and bottom of the back plate, use a dado blade and a miter fence to cut the dadoes to hold the horizontal pieces.*

A groove for the hanging hardware. *Becksvoort cuts a stopped groove on the rear face of the back plate. When the workpiece hits a stop on the fence, he turns off the saw and waits for the blade to stop before picking up the piece.*

Wall bracket holds the arm

The bracket consists of a back plate and two horizontal pieces screwed into dadoes in the back plate. There's a stopped groove in the rear face of the back plate to accept hanging hardware—a nesting pair of tapered steel connectors.

I start with the horizontal pieces. On the drill press, make a jig to hold the pieces and drill a ⅞-in. hole centered about 1⅛ in. from the front. Next, taper the pieces 6° on both sides. I do this on the bandsaw and clean up by hand.

I chamfer the top and bottom of the back plate at about 28°. Then I cut the ¾-in. dadoes for the horizontal pieces, using a ⅝-in. dado set and sneaking up on the exact width.

Next, at the drill press, drill four clearance holes for screws, centered in the dadoes and about ½ in. from the sides of the back plate. Now, with the dado blade still in my tablesaw, I cut the stopped groove in the rear face of the back plate for the hanging hardware. For this cut, I use a push stick and a stop. I turn the saw off when I hit the stop, waiting until the blade stops before lifting the workpiece. Then I chisel the end of the groove square. Now sand all the pieces to a shine, and break the edges.

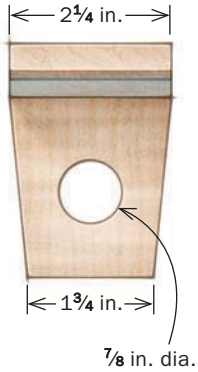

TOP VIEW

Taper the horizontals. *On the bandsaw, cut a slight taper on the sides of each horizontal piece. This little change creates a huge visual difference.*

Install the hanger. *After gluing and screwing the wooden pieces together, install the steel hanging mechanism (Lee Valley 4 in. Taper Connectors, No. 00S13.04).*

A turned post holds the arm in the wall bracket

A hole for the wire. *On the drill press, cut a 3-in.-deep hole centered in the bottom of the post stock. The cord will run through this hole and out the side of the post.*

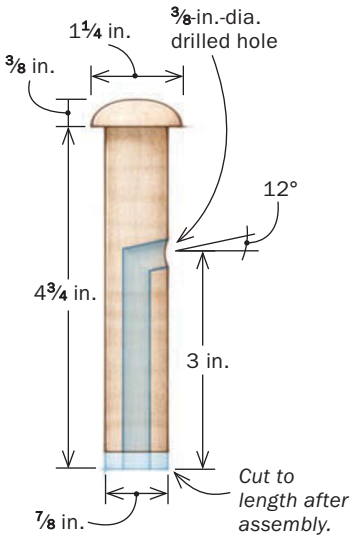

Post locks the arm to the wall bracket

I turned the post on which the arm swivels from 1¼-in.-square stock. Alternatively, it could be turned from a 1¼-in.-dia. dowel. First, drill a ⅜-in.-dia. hole, about 3 in. deep, into one end of the blank. On the lathe, turn a section about 4¾ in. long to a smidge under ⅞ in. dia. Use the pre-drilled horizontal pieces to test the fit. The post should turn easily in the holes, but should not be too loose. At the top of the post turn a mushroom cap 1 in. dia. or larger and about ⅜ in. high. Remove the post from the lathe and sand or carve it to suit.

Putting it all together

Insert the two horizontal pieces into the dadoes, and glue and clamp them in position. After the glue dries, pre-drill for and drive 1½-in. screws. Fit both parts of the steel hanging hardware into the groove in the back plate, and make sure they are

Post production. *Turn the post down to ⅞ in. dia., testing its fit in the holes already drilled into the horizontal wall bracket pieces. Then turn a cap on the top of the post. Once the cap is sized, you can sand or carve it.*

Cut to length. *Insert the post in the wall bracket and mark its final length. It should not protrude from the bottom. Cut it to length at the bandsaw or with a handsaw.*

Assembling the lamp

All the parts together function like a large wooden hinge.

Piece it together. *Slot the arm between the two horizontals and insert the post. Next position the arm so that you can imagine the wire feeding up through the bottom of the post and coming out into the groove in the arm. Mark that spot with a pencil.*

flush with the back. Remove one part and screw the other part into the groove. The other half gets screwed to the wall.

With a sharp knife or rat-tail rasp, ease the edges where the wiring groove in the arm meets the front ¼-in. hole, and the back ⅞-in. hole. This keeps the electric wire from making too sharp a bend. Now insert the arm in the bracket, and pin it in place with the post. The arm should swivel easily.

With a sharp pencil, reach into the groove along the back of the arm and mark where it meets the post. Get as low as possible. Then remove the post and clamp it in a vise. With a ⅜-in. brad-point bit, held at about a 12° angle, drill into the post until you break through into the center hole. Clean up with a knife or rat-tail rasp.

Reassemble the whole business, making sure that the arm groove lines up perfectly with the angled entry hole you just drilled. Now lock that relationship in place with a #4 flathead wood screw, driving it through the arm and into the post. This set screw will need to be removed and re-inserted in the future, so to make that process easier, use a sharp knife or chisel to mark the alignment of arm and post.

Remove the post and sand everything to 220 to 320 grit. Finish with your favorite finish. This piece doesn't get handled a lot, so a bulletproof finish isn't necessary.

Christian Becksvoort makes furniture in New Gloucester, Maine.

Drill a hole for the wire. *At an angle, carefully and slowly drill a hole into the side of the post, stopping when you hit the vertical hole you drilled earlier.*

Lock the arm to the post. *Now put the lamp together and line up the angled hole in the post with the groove in the arm. Use a knife to make a registration mark on the post and the arm. Predrill and insert a tiny screw to keep the hole and groove lined up.*

Change it up

Starting with a simple arm design allows you to radically alter the look of the lamp by switching up the shade or cord. The same arm can work equally well with a traditional shade or a sleek, modern one.

SOURCES OF SUPPLY

ELECTRICAL SUPPLIES AND GLASS SHADE

colorcord.com

Shade ready socket
PSK-003-101

10 ft. wire

Cord thumb switch
PSW-001-010

homedepot.com

Leviton 15 Amp
125-Volt Light-Duty Plug
R52-00101-0WP

destinationlighting.com

White Art Glass Shade
422032

Lots of options. *Sources for lamp parts are virtually unlimited, ranging from handmade to manufactured, and available online, in small stores, or from big box retailers. A few of Becksvoort's go-to online sources: colorcord.com, destinationlighting.com, lampglass.net*

Electrify your lamp

To power the lamp, feed the wire into the groove and through the post, then feed the other end through the front hole. Attach the socket, switch, and plug. Then attach the shade. To determine the correct size glass shade, measure the inner diameter of the shade holder (fitter) on your fixture. Common diameters for shade holders are: 2¼ in., 3¼ in., 4 in., 6 in., 10 in., and 12 in. Select a shade with a corresponding fitter diameter.

Feed wire from the top of the arm first. *Here Becksvoort feeds the wire into the side hole of the post. He pulls it through the post and out the bottom, leaving enough wire at the top to span the arm and hang down to hold the shade.*

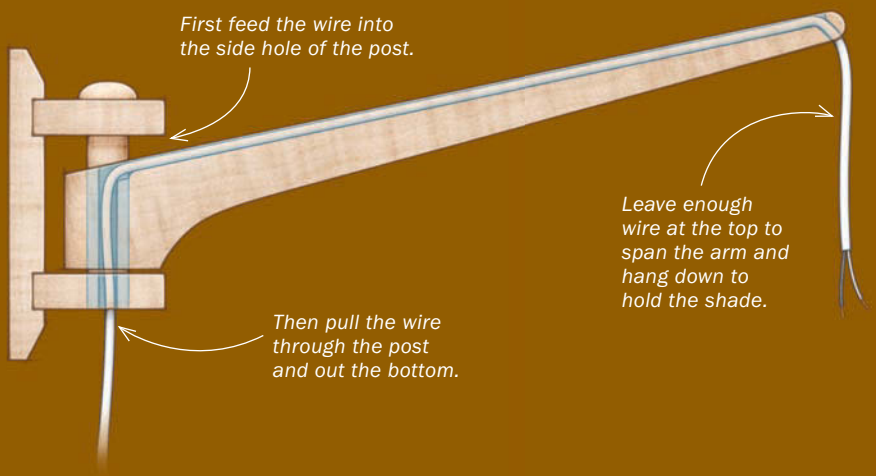

2 SOCKET TO 'EM

Becksvoort pulls the wire through the shade cap and connects the wire to the socket. He adds a socket extender, slides on the shade, and secures it with a ring that threads to the extender, under the shade.

3 ADD THE PLUG

This lamp was made to plug into an outlet controlled by a light switch. However, you can add an inline switch if you want to use the lamp in an outlet that is powered directly.