Dust Detector

Switch automatically turns on dust collector when machines are running

BY ROBERT S. WRIGHT

After we moved into our new house, my wife decided that we needed a change in bedroom furniture. As I contemplated the months—years?—it would take me to complete this challenge, my pride was dealt a sudden blow. My wife said she wanted to *buy* a bedroom set made in the Queen Anne style. Well, I had to admit that carving shells was not part of my repertoire (yet), so I gave in. Meanwhile, as a sop to my ego, I got the go-ahead to enhance my shop with a bandsaw, new saw fence and, most importantly, a dust collector to keep the new home clean. I love that new bedroom set!

The new tools worked out fine, except for one thing: Even though I placed the switch for the dust collector in a central location, I often neglected to turn it on. I needed a better solution. The World Wide Web can be a good place to find answers to technical problems, and this dilemma proved to be no exception. After some searching, I discovered I could buy an off-the-shelf current sensor that would serve as the heart of a shopmade automatic switch for my dust collector. The rest of the parts include a relay, a basic on/off switch, single electrical box and some wire. The total cost: a little more than $50.

The concept is simple and works like similar products on the market, which cost four times as much. A current sensor is placed inside the service panel (or in a separate panel next to it) that serves the shop. One hot wire from each tool that is connected to a dust collector runs through the sensor. When a tool is fired up, the sensor detects the current running through the hot wire. A signal is sent to the relay, which turns on the dust collector. It's that easy. Blast gates are your responsibility.

It's important to choose the correct relay based on the horsepower and voltage of your dust collector. And because the sensor works by reading current, you'll need to isolate each tool on its own circuit. For home shops that share electrical circuits with home appliances, my system may be more work or expense than you're willing to absorb. An aftermarket radio-controlled on/off switch might be a better choice.

A few words of caution: If you don't know anything about electrical equipment, get some help. There is a danger of electrical shock and all the mishaps associated with it, including death. Some locales do

Photos, except where noted: Anatole Burkin; this page: Michael Pekovich

SHOPMADE AUTOMATIC SWITCH

Turn off all power before working inside the service panel. If this is unfamiliar territory, call an electrician. This diagram shows the wiring for a 240-volt woodworking machine and a 240-volt dust collector. For a 120-volt tool, substitute the second power wire with a neutral wire (see the bottom drawing on p. 69).

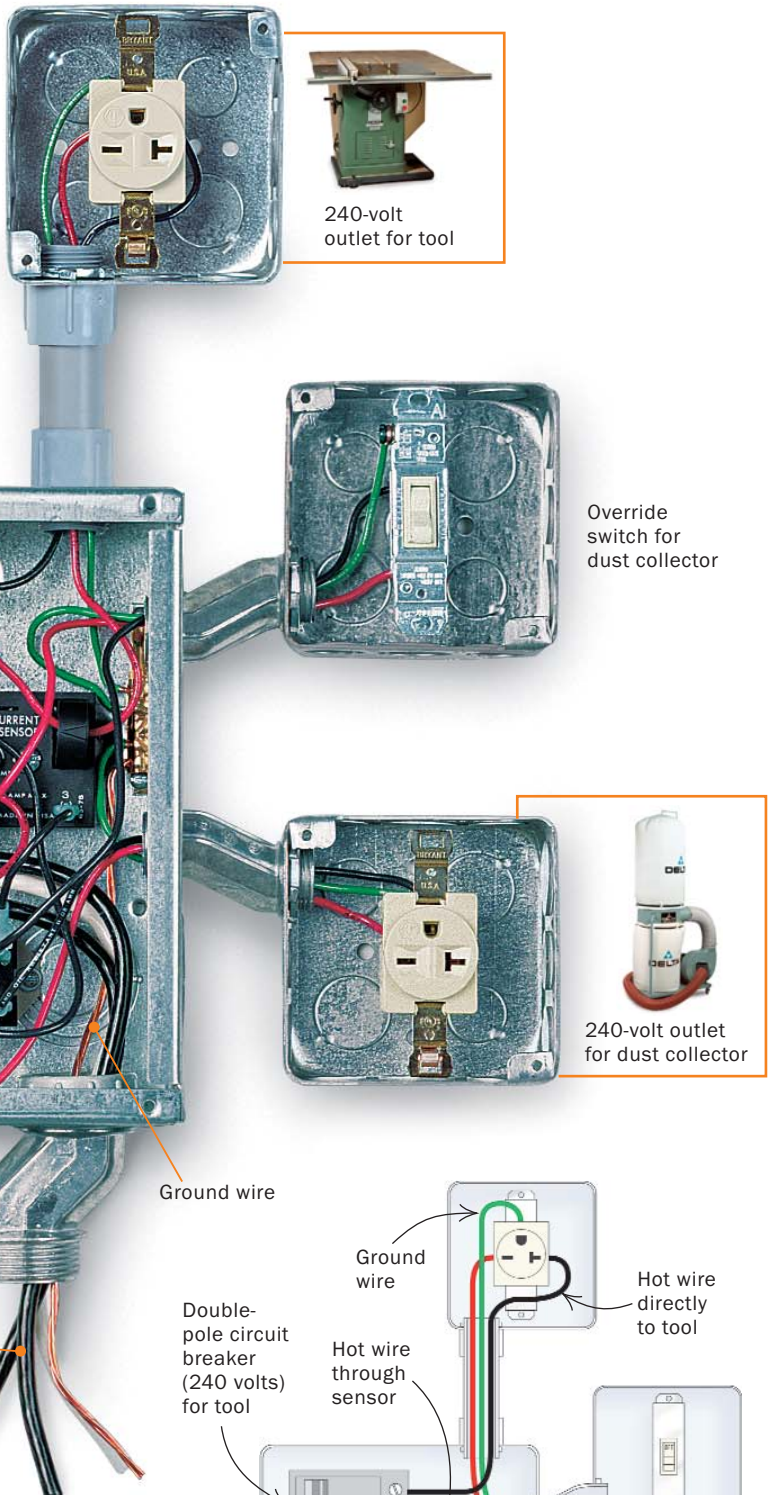

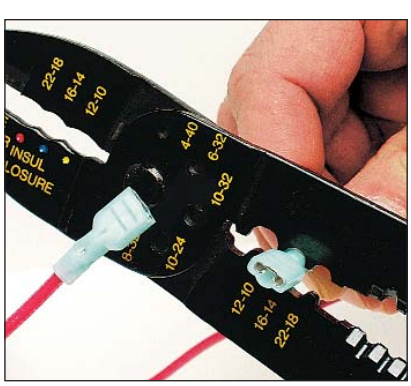

Sensor and relay have ¼-in. spade lugs. *Female connectors are attached to the wire with a crimping tool.*

1. CONNECT TOOLS TO THE CURRENT SENSOR

One hot wire from each tool circuit is routed through the sensor's loop. The loop can handle about six 12-gauge wires.

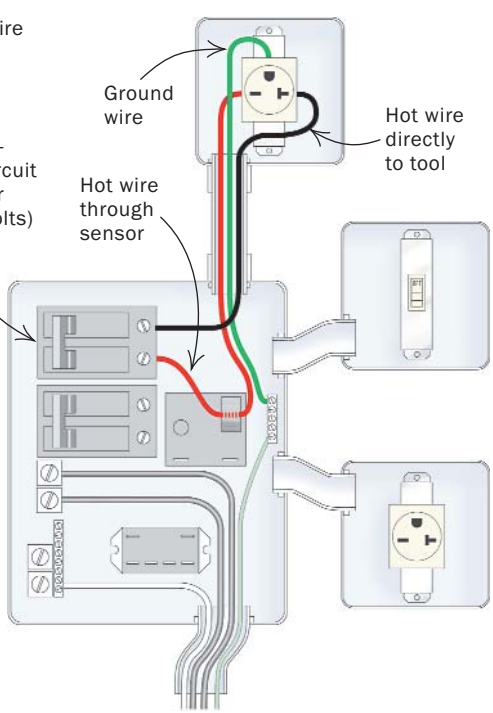

Drawings: Michael Pekovich

2. WIRE THE RELAY FOR THE DUST COLLECTOR

The dust collector must have its own circuit breaker.

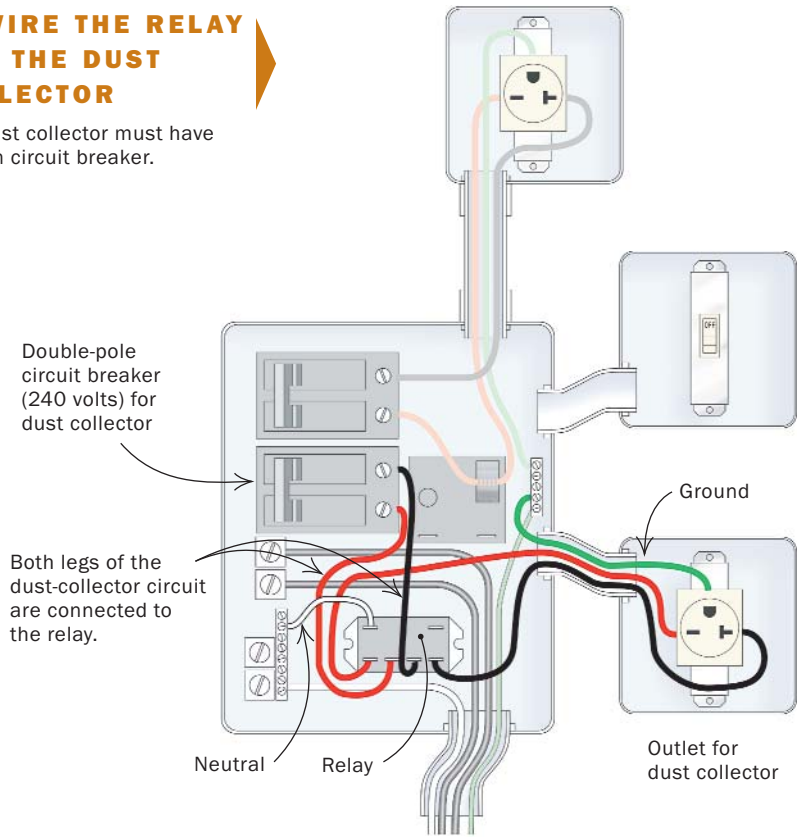

3. CONNECT THE RELAY TO THE SENSOR

Choose a relay that's rated for 240 volts.

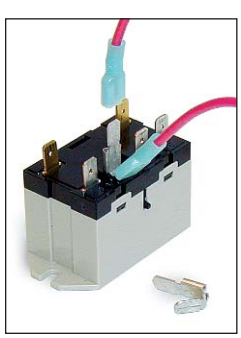

Use a splitter where two connections need to be made to one terminal. *You could also use pigtails and wire nuts.*

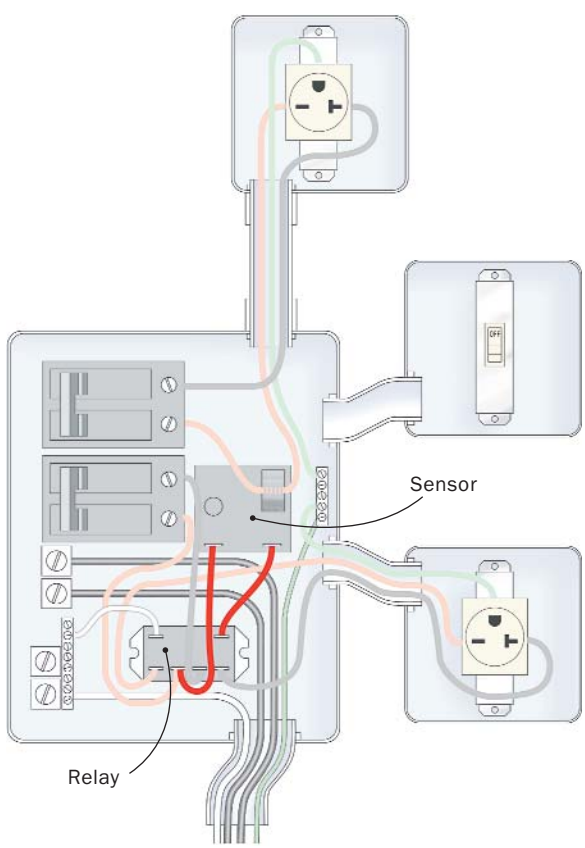

not allow you to do your own electrical work; you're required to hire a licensed contractor to do it. When in doubt, contact your local authorities. Be sure to turn off the power before working around any live connections. Once I gathered up all the parts, the job took me about an hour.

Install the sensor in a service panel

After turning off the power, remove the cover of the service panel. Be sure to place the screws in a safe place. It is amazing how far they can travel without legs.

Locate and mark the wires that power woodworking machines with dust collection. If there are tools on a trigger circuit that should not set off the dust collector, put them on new or different circuits. (Because the current sensor can be adjusted for sensitivity from 2 amps to 20 amps, it is possible to run other tools without setting off the sensor as long as the unwanted tools are of a lower amperage rating.)

Find an area near the wires to install the current sensor module. Attach it with a pan-head sheet-metal screw. Position the relay to allow easy routing of wires.

Detach one hot wire for each circuit (use only one hot wire from 240-volt tools) from its circuit breaker. Route the wire through the sensor's loop, then reconnect it to its circuit breaker. The current sensor has a loop big enough for about six 12-gauge THHN wires.

Next, install the relay. If there's no room in the service panel, place the relay in a smaller electrical box and connect it to the main box with a piece of conduit.

Install the override switch in a logical place in the shop. Run conduit and two 12-gauge wires from the switch to the service panel. The switch allows the collector to be turned on for other uses, such as with a floor sweep, or to be used with tools not connected to the sensor.

If the dust collector's circuit breaker is far from the shop area, and the dust collector does not have its own on/off switch or a plug, install a disconnect switch in the power line close to the dust collector as a safety measure.

The wiring for the relay is slightly different for a 120-volt collector than it is for a 240-volt collector (see the bottom drawing on the facing page). Use crimp-on spade lug connectors to connect to the sensor module and relay. Be sure to orient the override switch in a way that won't con-

4. INSTALL AN OVERRIDE SWITCH

The override switch turns on the dust collector when tools not connected to the sensor are running.

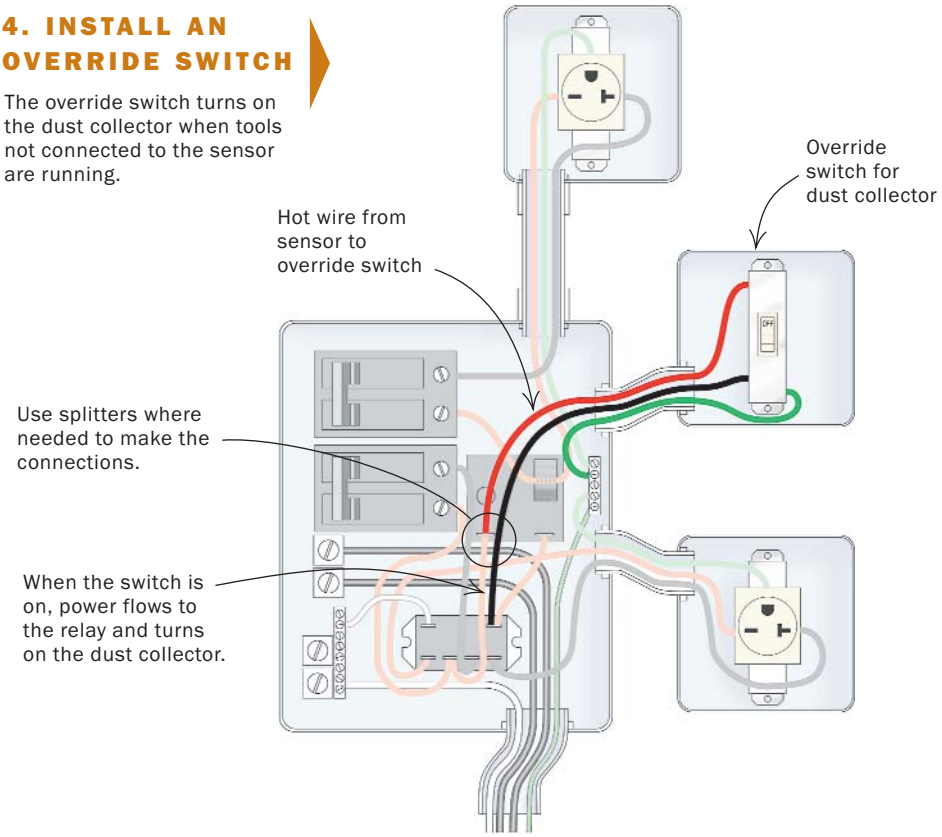

WIRING FOR 120-VOLT SYSTEM

Substitute a lower-cost single-pole relay. Note: Woodworking machines may be 120 or 240 volts or a combination of both.

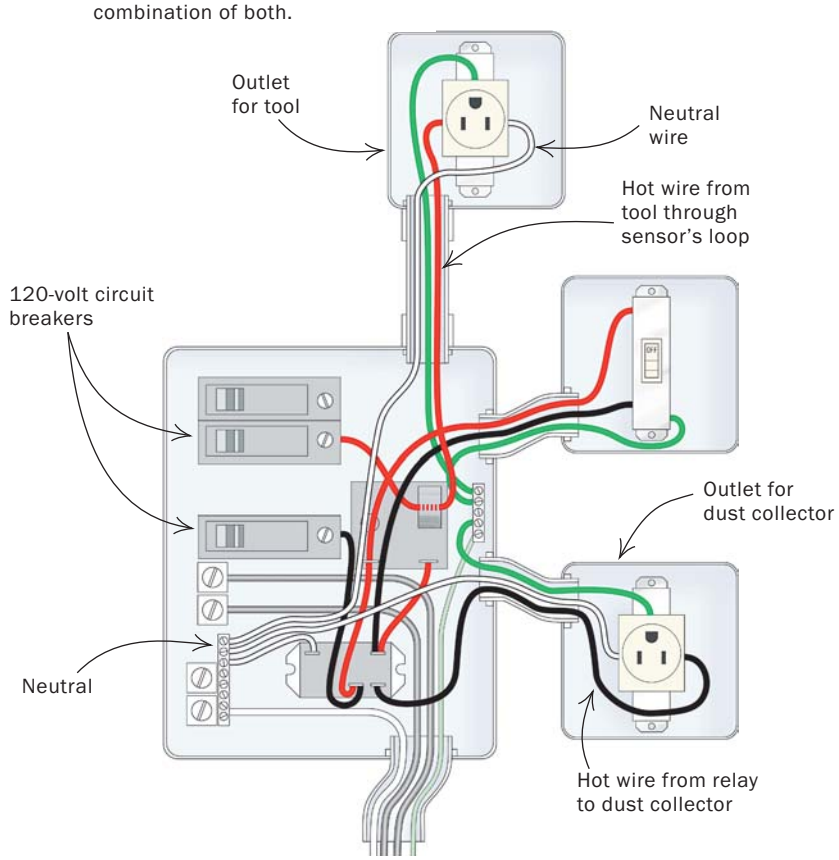

fuse. Normally, the up position means "on." The wires used to connect all of the parts have to be large enough for the circuit breaker that powers everything. Twelve-gauge wire is the minimum size required for a 20-amp circuit.

Time for the acid test. Set the sensor's sensitivity knob to 2 amps. Re-install the cover on the service panel. Verify that the override switch is in its off position. Restore power to the panel, then turn on all of the circuit breakers. The dust collector should not start. If it does, be sure that the override switch is installed correctly. Test the current-sensor circuit by starting the tools connected to the dust collector. The collector should turn on and off with each tool. Test the override switch. If everything works as planned, power up some smaller tools that share circuits with dust-collected tools. If they set off the collector, fiddle with the sensitivity knob of the sensor and see if you can dial them out selectively. It's a trial-and-error process and will be more successful with smaller, portable tools. □

PARTS LIST FOR AUTOMATIC SWITCH

Part	Cost
SSAC current sensor TCSHAA	$38
Power relay; Grainger part No. 3A355	$11
Common household switch	$1
Single-gang electrical box	$1.50
Female ¼-in. spade lugs	$2
Wire nuts or splitters	$1
If needed: 12-gauge THHN wire, conduit	

- The current sensor and power relays are available from many electronics distributors. Grainger (800-225-5994) is listed for convenience. Contact SSAC via its web site (www.ssac.com) or call (315) 638-1300.
- Choose a relay rated for the dust collector's horsepower *and* voltage. The Grainger 3A355 is suitable for a 1-hp collector running on 115 volts or a 2-hp unit running on 230 volts. For a 3-hp dust collector, choose a heavier relay (Grainger part No. 6C913).

Robert S. Wright enjoys recreational woodworking at his home in San Marcos, Calif.