A Shaker Style Drop-Leaf Table

Turned legs with drilled-and-chiseled mortises

by Greg Isaak

This single-drop-leaf table was inspired by several original Shaker pieces in New York and Massachusetts. The author modified the legs to reflect his fondness for the designs of Thomas Sheraton.

To cut a mortise with the drill-and-chisel method, the author first bores out most of the waste using a brad-point bit that just barely fits within the layout lines.

I first became interested in Shaker furniture because of some pieces my mother owned. I was drawn to the Shakers' simple, unadorned designs, their restrained, but strong joinery, and their uncompromising insistence on quality. As I examined my family's furniture and studied pieces presented in books and museums, I also became fascinated with the way Shaker designs had been influenced by Federal furniture built in the United States between 1782 and 1815. The ideas of designers like Duncan Phyfe, Robert Adam, Thomas Sheraton and George Hepplewhite can be easily identified in many Shaker originals.

Since I like this diversity of design ideas, it's not surprising that my table, shown finished on the facing page, is not an exact replica of any one piece. Rather, it incorporates the features of several New York and Massachusetts pieces. I based the overall size of the table and the shape of its legs on a New York original, but I modified the turned legs to capture the graceful look of Sheraton furniture. The single drop leaf is from a table at the Hancock Shaker Museum in Massachusetts.

Like its Shaker ancestors, my table is very functional. Its small size and two shallow drawers make it ideal as an occasional table, end table or nightstand. And there is nothing tricky about building the piece; all the work can be done with a few simple tools. Stock preparation is relatively easy because the components are so small. The legs were milled into square blanks, mortised and then turned to shape. After cutting the aprons to size, I tenoned their ends to fit the leg mortises. The top is two edge-glued boards, with a routed rule joint for the drop leaf.

Mortising and turning the legs

I cut the leg mortises with the old drill-and-chisel method. This is one of the simplest methods for cutting mortises if you don't have a horizontal mortising machine, hollow-chisel mortiser or router. A drill press and a chisel or two are the only equipment needed. I started by cutting the stock for the legs to the dimensions given in the drawing on p. 93. To avoid splitting the wood when mortising near the top of the legs or when turning the narrow feet, I cut the square blanks about 1½ in. oversize on each end.

Next, I laid out the mortises and bored out the space between the layout lines using a brad-point bit with a diameter just slightly smaller than the width of the mortise, as shown in the bottom photo on the facing page. If you don't have a correct-size brad-point bit, you could also use a Forstner or spur bit. A fence clamped to the drill-press table helped me align the holes. After boring out as much waste as possible, I squared the mortise walls with a chisel (see the left photo below). Although the side walls can usually be pared with hand pressure alone, you may need a mallet to drive the chisel into the tougher endgrain.

After the mortises were chopped out, the legs were ready to be turned. If you don't have a lathe, you may prefer to use a square-sectioned tapered leg, a characteristic of Hepplewhite design. For stability while turning, I mounted the end that will have the least amount of stock removed, in this case the square top section, on the lathe's headstock, as shown in the photo at right below. Then I measured down each leg to locate several checkpoints: the transition point between the square and turned section; the largest diameter, which is at the midpoint of the turned section; and the diameter of the bottom, as shown in the drawing on p. 93. Basically, my method was to turn the blank to the required diameters at the major checkpoints with either a parting tool or a ½-in. roundnose scraper. Calipers worked well to gauge the diameters. After establishing the checkpoints, I used a roundnose scraper (see the photo at right below) to blend the rest of the leg with the three diameters I had established. (If you don't have a roundnose scraper, you can use a sharp gouge.)

After turning the first leg, I realized that taking additional measurements would help in locating other checkpoints. When I measured my first leg, I found that its diameter was 1⅛ in. at a point 1½ in. from the bottom of the transitional collar, and 1 in. in diameter 14¾ in. below the collar. Establishing these checkpoints, in addition to the original three, not only ensured that all four legs were consistent, but it also sped up the turning process by minimizing guesswork. Next, I smoothed the roughed-out leg with a sharp gouge and a roundnose scraper, and then I lightly sanded the leg. If you work carefully and check the leg with calipers as you turn, all four legs should come out pretty close to the dimensions I've given in the drawing on p. 93. I didn't sand the transitional collar while the piece was on the lathe because I didn't want to soften this crisp detail. Instead, I sanded it by hand after the leg was removed from the lathe, and then I crosscut it to final length.

The ridges left by the drill bit are pared away with a sharp chisel. *Hand pressure is usually sufficient to pare the side walls of the mortise, but a mallet is better for squaring up tougher endgrain.*

Photo of finished table: Wesley Bender

The legs are turned after the mortises are complete. *Isaak mounts the top of the leg in the headstock and then uses a scraper to shape the transition between the square top and the rest of the leg.*

Case construction

I cut the apron tenons and drawer-rail tenons shown in the drawing by making multiple passes on my tablesaw with the workpiece laid flat on the table and guided by the miter gauge. I made the cuts with a regular sawblade, although you might prefer to mount a dado head on your saw to speed the process. Each of the 6-in.-wide apron tenons is ½ in. thick by ⅝ in. long. The drawer-rail tenons vary in size, as shown in the drawing. The tenons on the top rail are flush with its upper surface, while the tenons on the bottom rail are centered in the ¾-in.-thick stock. The ⅜-in.-thick tenons on the center rail are ½ in. wide by ⅝ in. long.

I was then ready to assemble the table frame. First, I dry-fit the two front legs and drawer rails, and pared the tenons slightly to achieve a good fit. I glued up the front assembly first, making sure that the assembly was square and that the two legs were on the same plane while drying. The clamps may need to be readjusted. Care at this stage is well invested; if the case is twisted or out of square, the drawers will fit poorly. Next, I assembled the two back legs and the back apron. Because of the wide tenons, this assembly should square itself if the mortises have been cut straight.

Now, I notched the left side apron for the pivoting leaf support. I angled the ends of the notch and the support so they would swing past each other easily and blend together without an apparent break when closed. I cut the 45° angles with a dovetail saw, and then I formed the opening by bandsawing away most of the waste. After trimming to the line with a chisel, I cut and fit the matching leaf support. With the support screwed in place, as shown in the drawing, I then planed it until the top surface was flush with the top of the apron. This ensured that the raised leaf would be level with the rest of the tabletop. Be aware that the screw head must be well countersunk to avoid damaging the plane iron. To complete the table frame, I glued the front assembly to the back-legs-and-apron assembly, again making sure that the table was square and true. I assembled the frame upside down on my bench and then measured from corner to corner after applying the clamps. The clamps may need to be adjusted to make the diagonals equal. After the frame was dry, I pinned the tenons with 3/16-in.-dia. dowels and sanded them flush. Besides strengthening the frame, the dowels add a nice design detail. To complete the case, I glued on the cleats, which secure the top.

Drawer construction

After assembling the frame, I measured each opening and assembled the drawers to fit with about 1/16-in. clearance on the top and sides. I used half-blind dovetails on the front corners, but made through dovetails on the back because I think these are essential components of high-quality work. In keeping with my affection for the Shakers, I cut the joints by hand. Over the years, I've found handwork satisfying, and it doesn't take much more time man setting up a router and jig, once I get into the swing.

Each drawer bottom is a 3/16-in.-thick piece of ash, with its grain running side to side. I glued the bottoms into rabbets in the drawer fronts and fastened the bottoms to the sides with brass brads. Bottoms that float in grooved drawer sides were more common in the Federal period, but my research showed that the Shakers often used nailed-on drawer bottoms for very shallow drawers. Apparently, they felt that the floating panels wasted too much space. The brads flexed enough to allow seasonal wood movement and to prevent the bottom panels from cracking. I turned the pulls shown in the drawing by mounting each one like a small spindle between centers on my lathe. After turning, I trimmed off the waste with a saw, and then I hand-sanded each pull as it was spinning in the Jacobs chuck of my drill press.

The next step was to position the supporting runners to ensure smooth-sliding, level drawers. I screwed the filler blocks in place, as shown in the drawing, clamped the runners for each drawer into position and slid in a drawer. If a drawer slid without binding and its four corners contacted the drawer runner, I screwed in the runners and glued in the drawer stops. Otherwise, I adjusted as needed.

Making the top

I edge-glued two pieces of wood to obtain an 18-in.-wide top. After the top and leaf were squared up and cut to the proper dimensions, I made the rule joint. I milled the top pieces enough oversize so that an offcut was left that I could use for testing router setups for the rule joint.

The rule joint, when done correctly, adds a very attractive visual detail. My method is pretty simple; I used only a ½-in. roundover bit and a ½-in. cove bit. First, I rounded over the edge of the tabletop that will butt the leaf. I made mis cut deep enough to leave a ⅛-in. shoulder. Similarly, I made a cove cut on the leaf that was deep enough to leave a ⅛-in. lip that will mate with the tabletop's shoulder cut.

Hinge locations are crucial for a good joint, and so these specially made hinges should be bought before the mating edges are shaped. The hinges are available from Paxton Hardware Ltd., 7818 Bradshaw Road, Upper Falls, Md. 21156; (301) 592-8505, or Lee Valley Tools, 1080 Morrison Drive, Ottawa, Ont., Canada K2H 8K7; (613) 596-0350, and several other supply houses. To ensure that the leaf will move smoothly, the center of the hinge pin must be mortised in line with the shoulder created by the roundover on the tabletop. To locate the center of the hinge pin, I marked down from the shoulder on each edge of the top with a try square and connected the two points with a straightedge on the underside of the top. The hinge pin goes directly on this line or slightly toward the table's edge. If you move the hinge pin's center 1/32 in. toward the leaf, the leaf will fit tightly to the shoulder when the leaf is up, but will gradually draw away from the roundover as it is lowered; this way, parts do not rub, regardless of the season. The hinges can be mortised in with a chisel or router, I used two hinges, each placed about 2½ in. from the end of the joint. (For more information on making a rule joint, see *FWW* #80, pp. 48-52.)

Before assembly, I sanded all parts of the table with 150-grit and 220-grit paper. To make sure everything was smooth and clean before finishing, I resanded again after assembly. I applied six coats of tung oil because I thought this finish would be most in keeping with the oil finishes and thin varnishes that the Shakers used. □

Greg Isaak makes period furniture and teaches in LaFox, Ill.

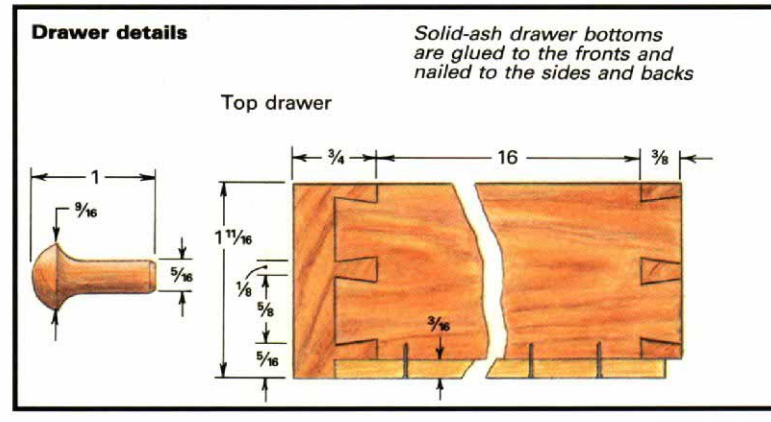

Photos except where noted: Dick Burrows; drawings: Lee Hov

Shaker style table

Table, 29 in. high, including top