William Morris Inspired Mission-Style Bed

by
Matt Berger

Killen•WOOD Orinda, CA	
Mission-Style Bed	
Tim Killen	Sep 2009

Orthographic View

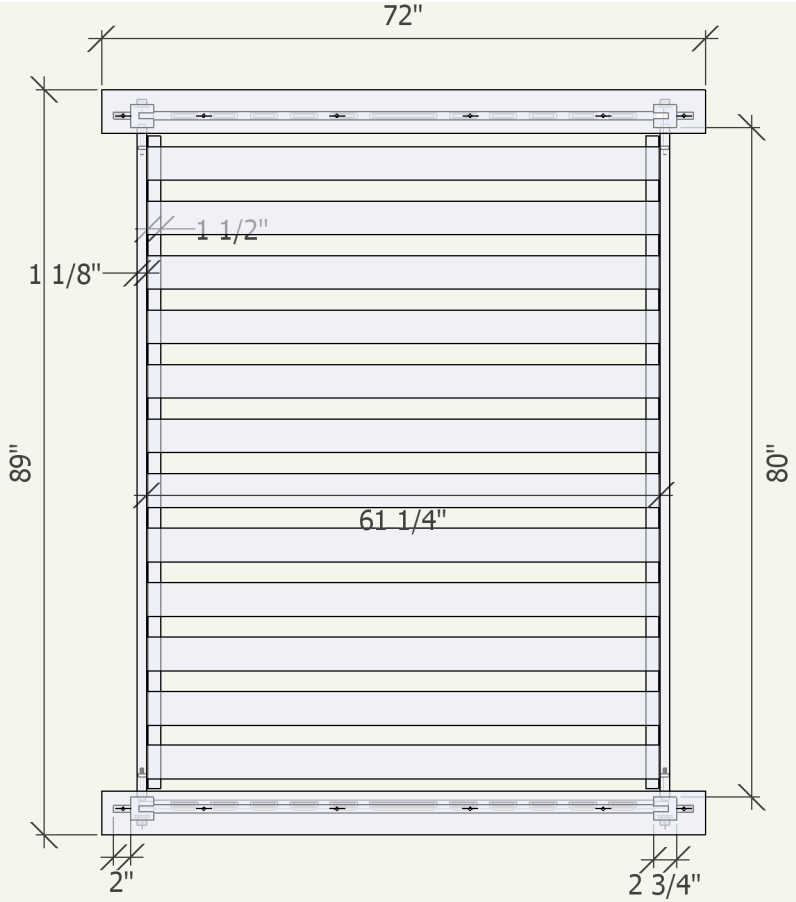

Mission Style Bed Cutlist

Quantity	Description	Length(X)	Width(Y)	Thickness(Z)
2	Bed Rail	80 3/4"	7 1/4"	1 1/8"
2	Mid Rail	63 1/8"	7 1/4"	1"
2	Cap	72"	5 1/4"	1"
2	Headboard Leg	42"	2 3/4"	2 3/4"
2	Footboard Leg	26"	2 3/4"	2 3/4"
12	Mattress Slats	61 1/4"	4"	3/4"
1	Bottom Rail	63 1/8"	2 5/8"	1"
2	Top Rail	63 1/8"	2 5/8"	1"
2	Cleat	78"	1 1/2"	1 1/8"
1	Headboard Mid Slat	14 3/8"	8"	5/8"
1	Footboard Mid Slat	9 1/8"	8"	5/8"
10	Headboard Slat	14 3/8"	3 1/4"	5/8"
4	Corbel	11"	2"	7/8"
10	Footboard Slat	9 1/8"	3 1/4"	5/8"
4	Faux Tenon	6 1/2"	1 1/8"	15/16"

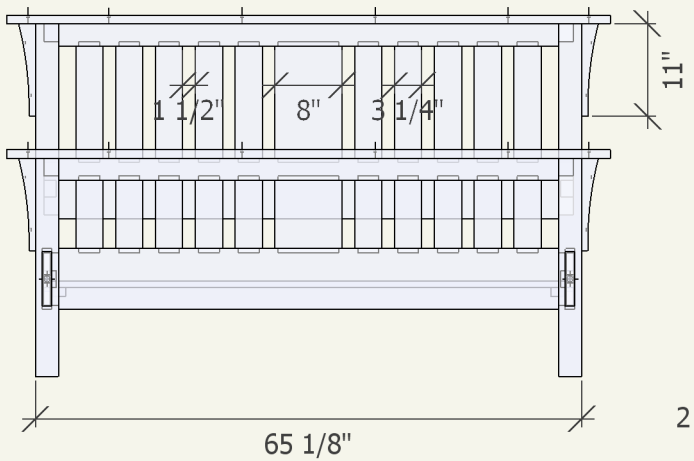

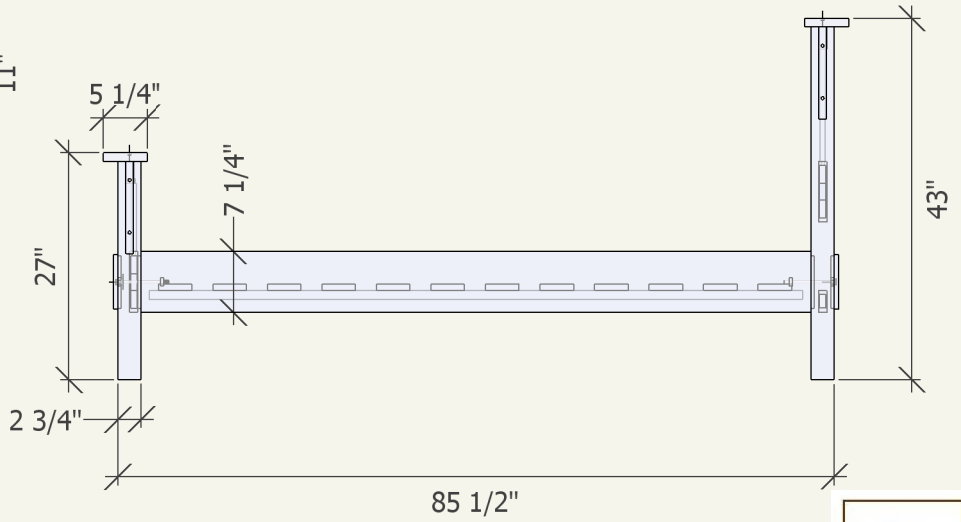

Killen•WOOD
Orinda, CA
Mission-Style Bed
Tim Killen | Sep 2009

Exploded View

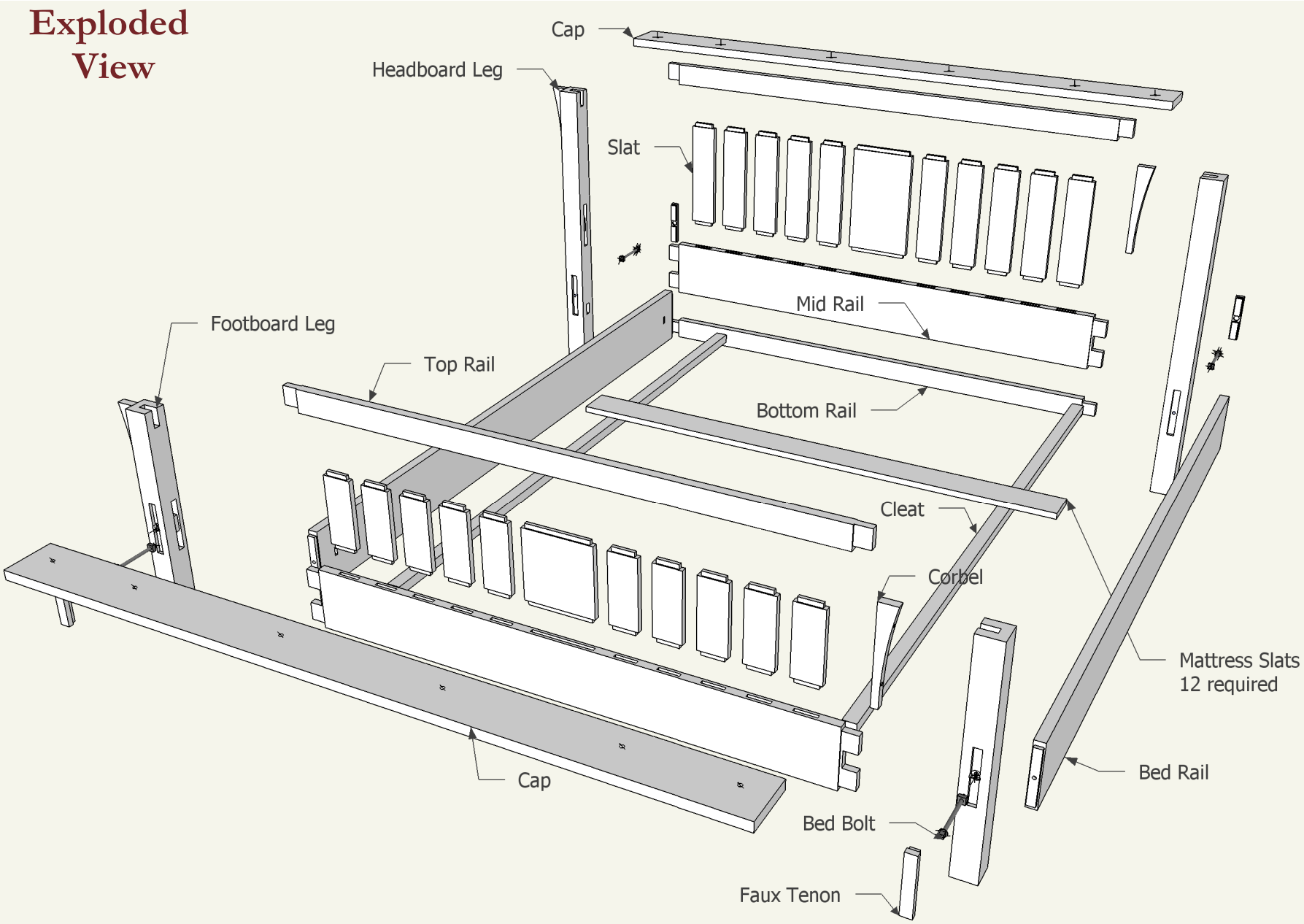

Killen•WOOD	
Orinda, CA	
Mission-Style Bed	
Tim Killen	Sep 2009

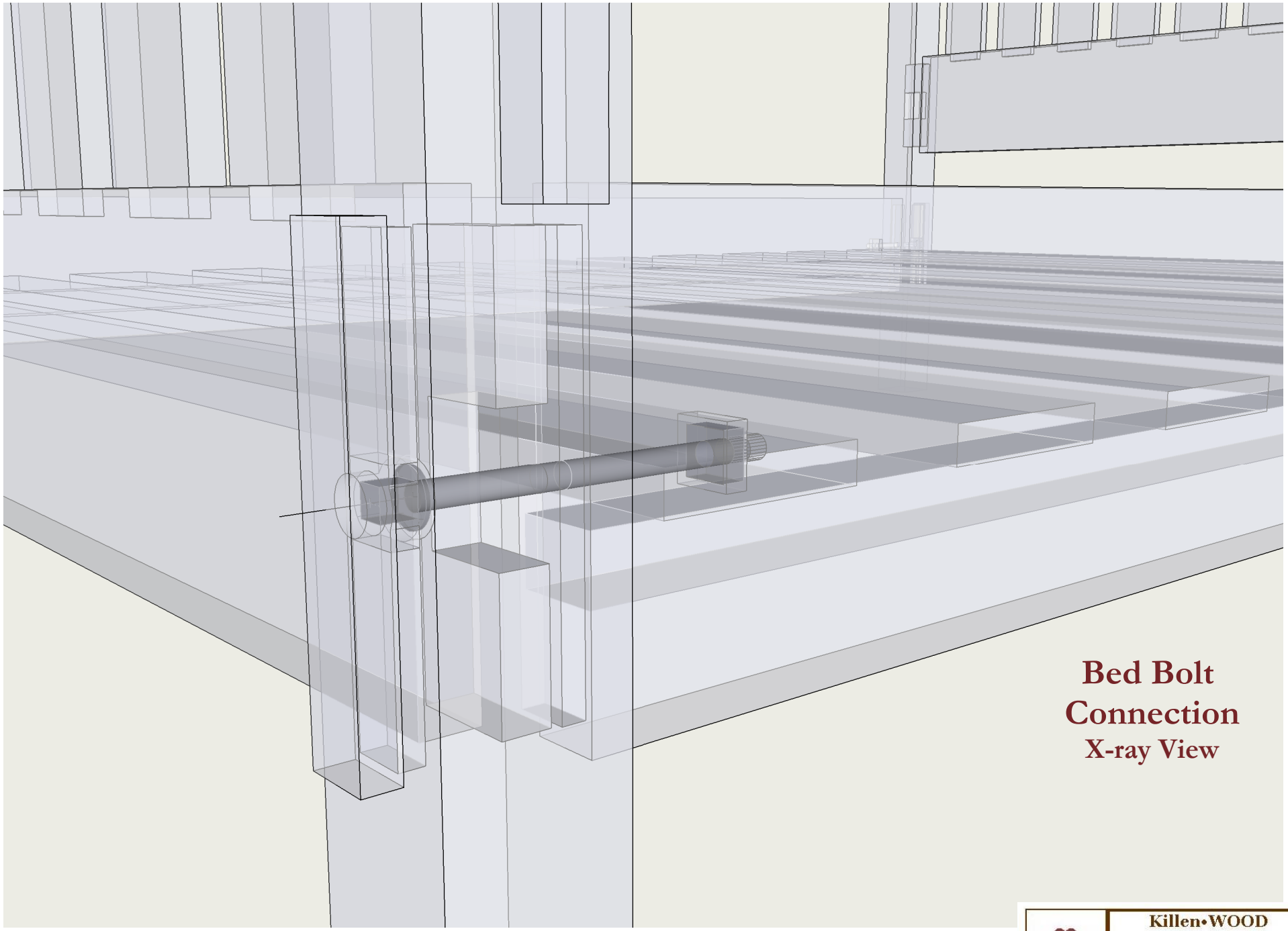

Bed Bolt Connection
X-ray View

Killen•WOOD
Orinda, CA

Mission-Style Bed

Tim Killen | Sep 2009

Bed Bolt Cross-section

1/2 Scale

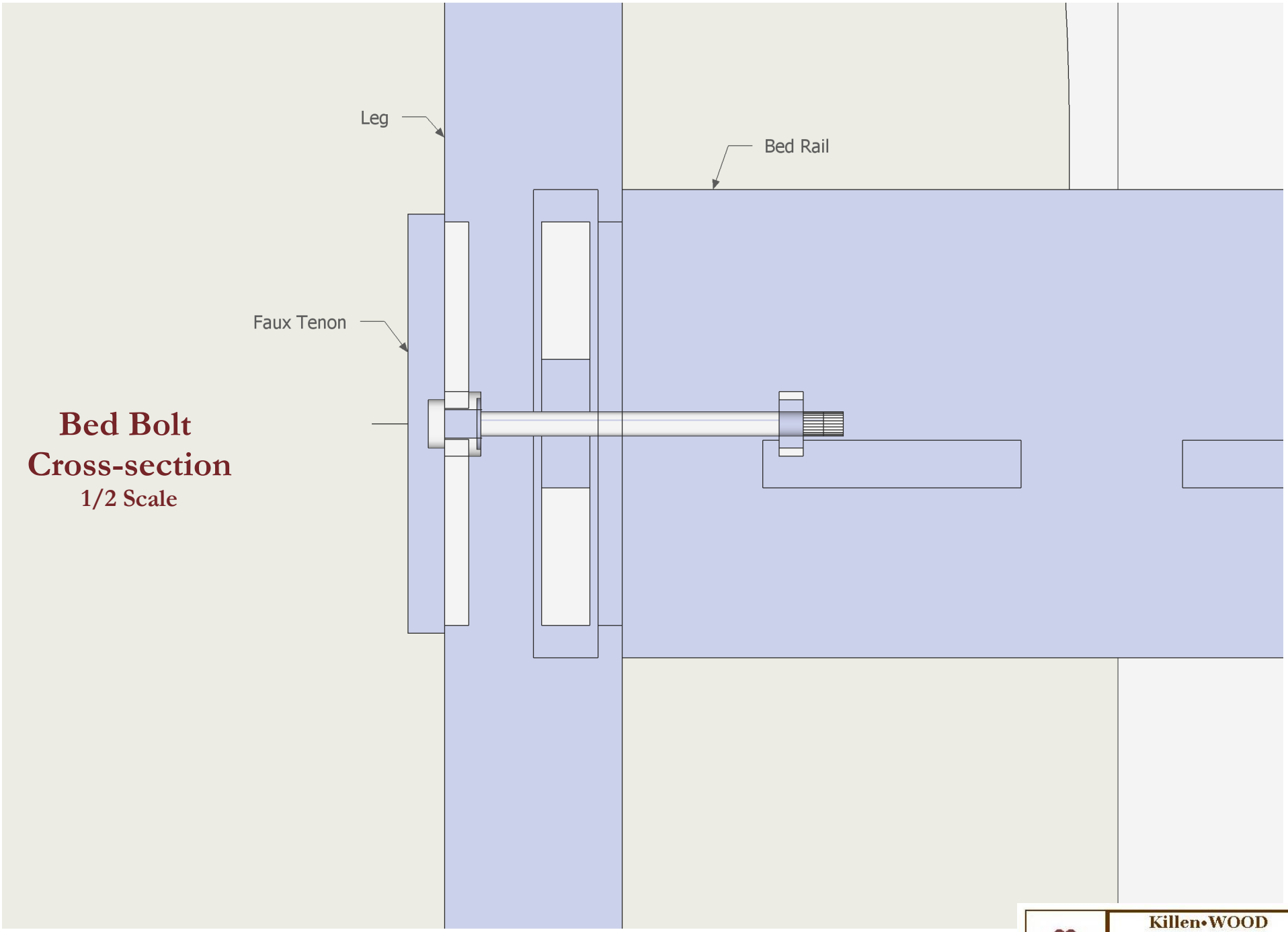

Killen•WOOD
Orinda, CA
Mission-Style Bed
Tim Killen | Sep 2009

Legs

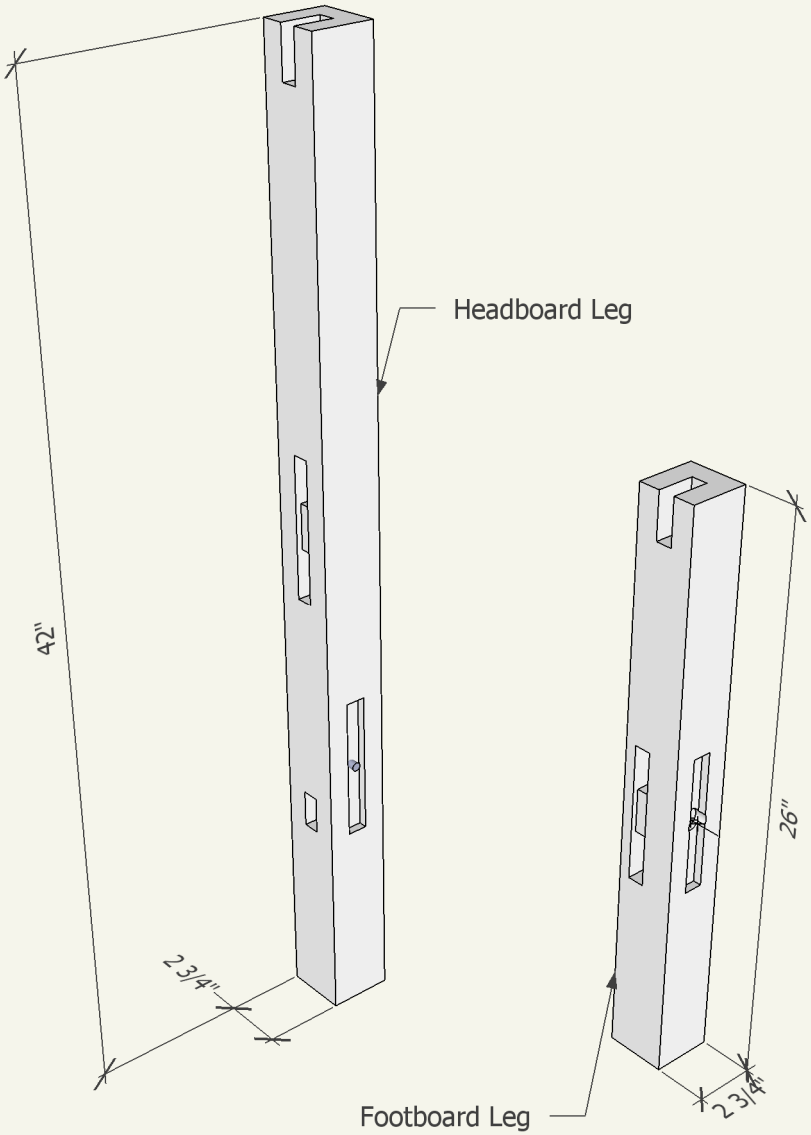

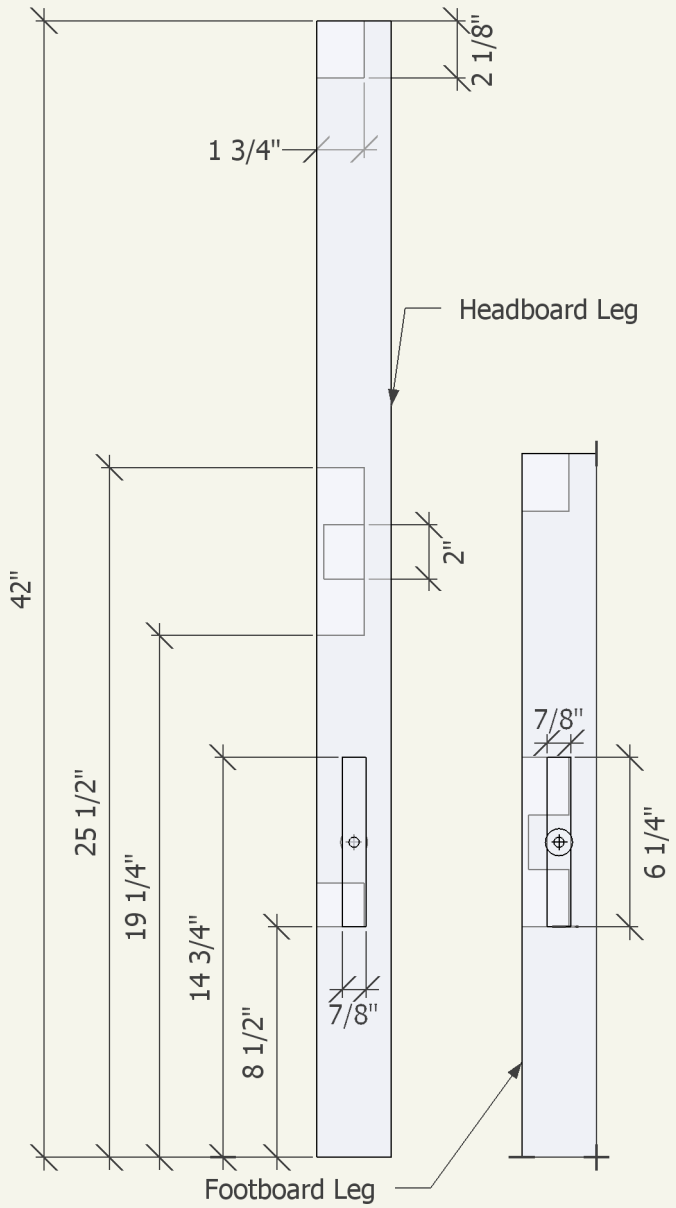

Orthographic X-ray View

Killen•WOOD Orinda, CA	
Mission-Style Bed	
Tim Killen	Sep 2009

Leg Faux Mortise and Tenon

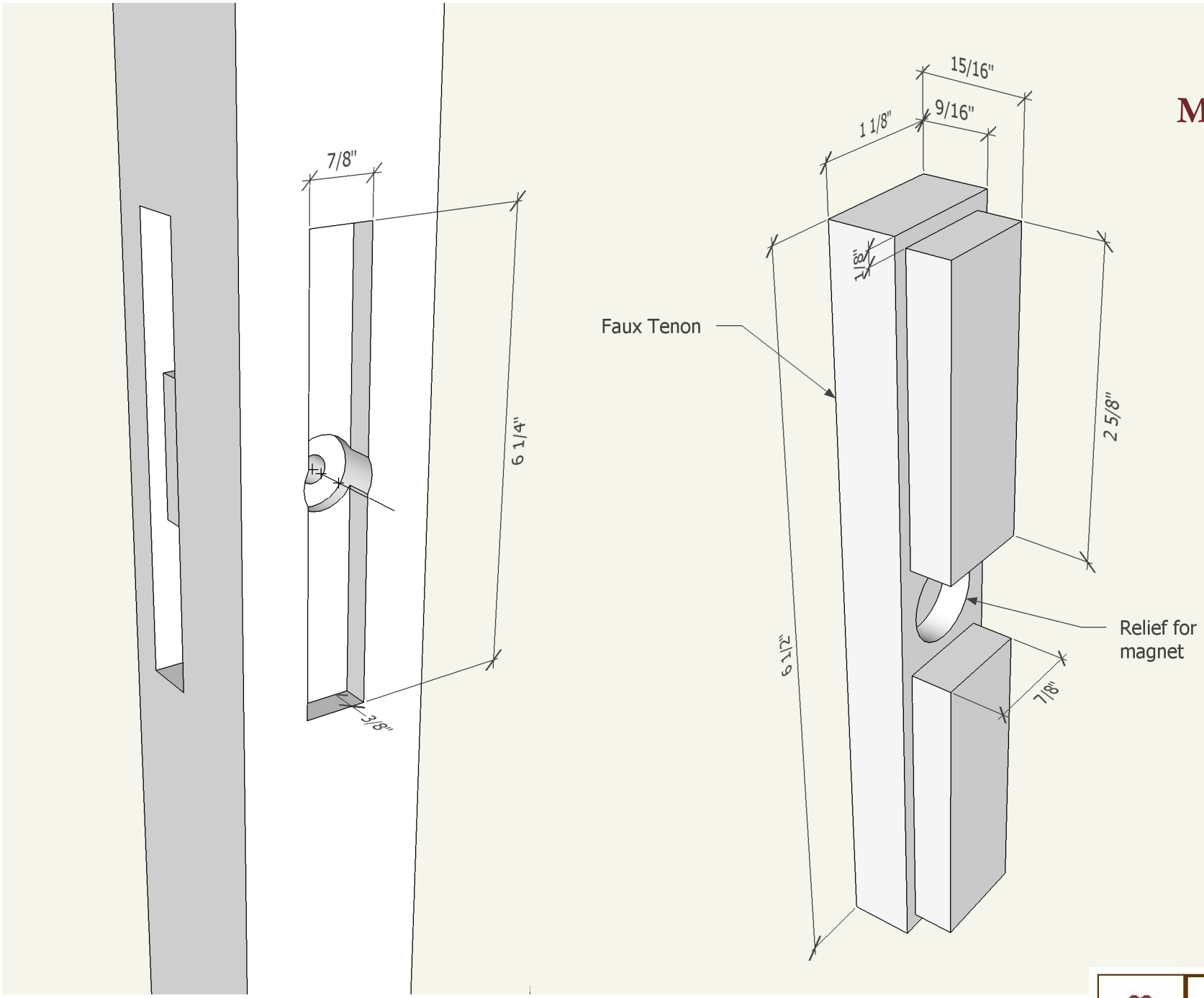

Killen•WOOD Orinda, CA	
Mission-Style Bed	
Tim Killen	Sep 2009

Headboard Rails

X-ray View

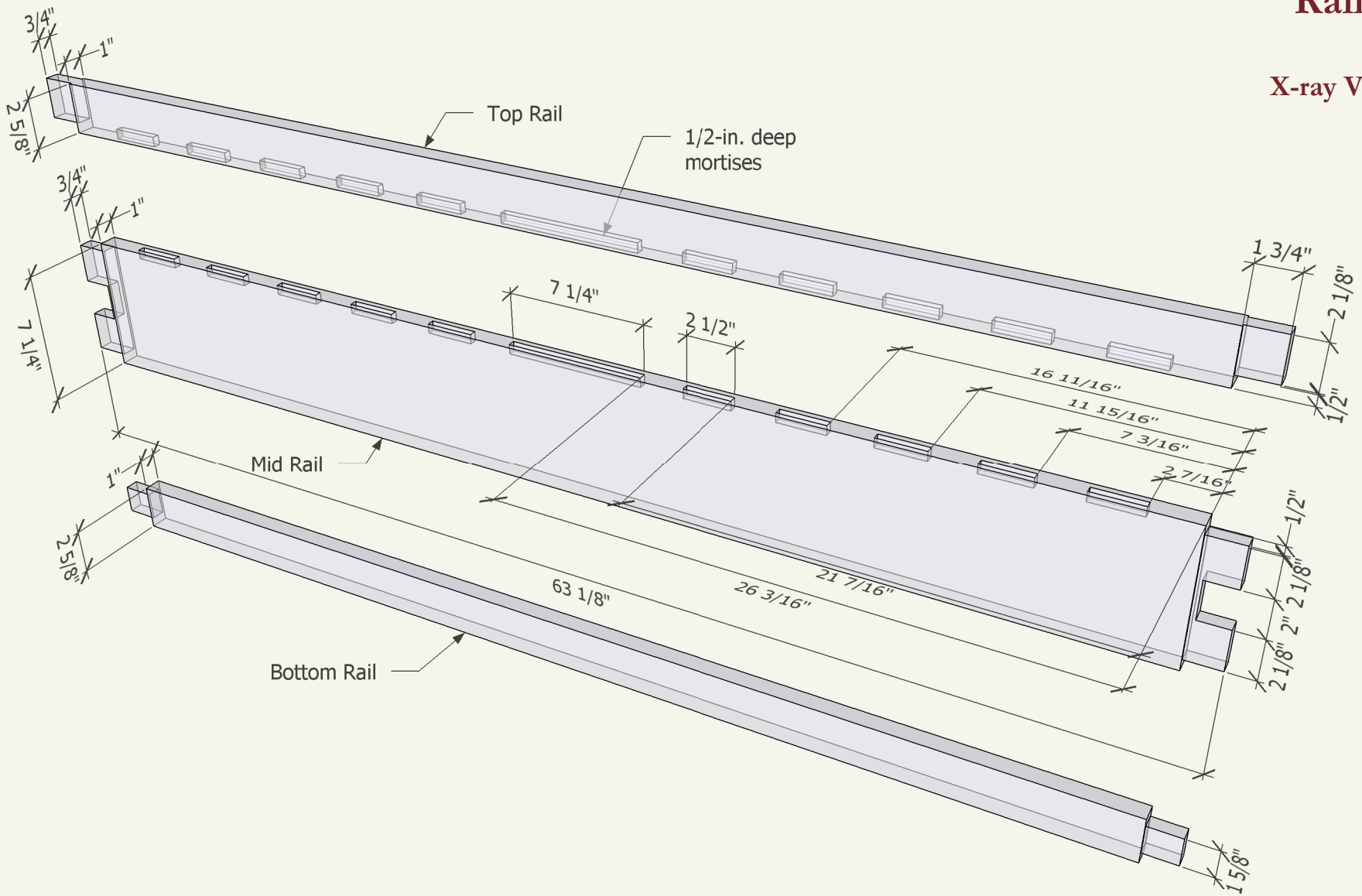

Killen•WOOD Orinda, CA	
Mission-Style Bed	
Tim Killen	Sep 2009

Headboard Slats

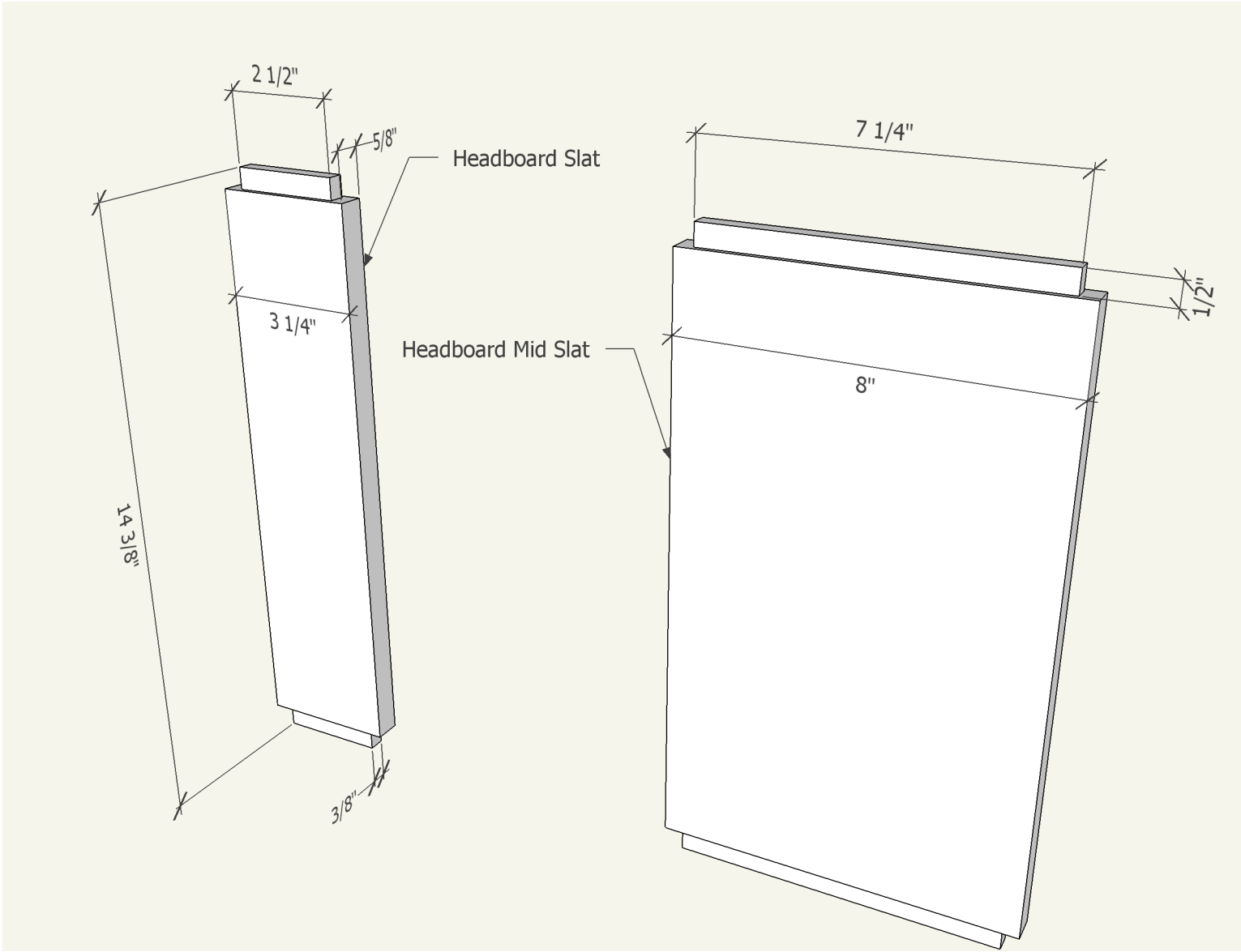

Killen•WOOD Orinda, CA	
Mission-Style Bed	
Tim Killen	Sep 2009

Footboard Slats

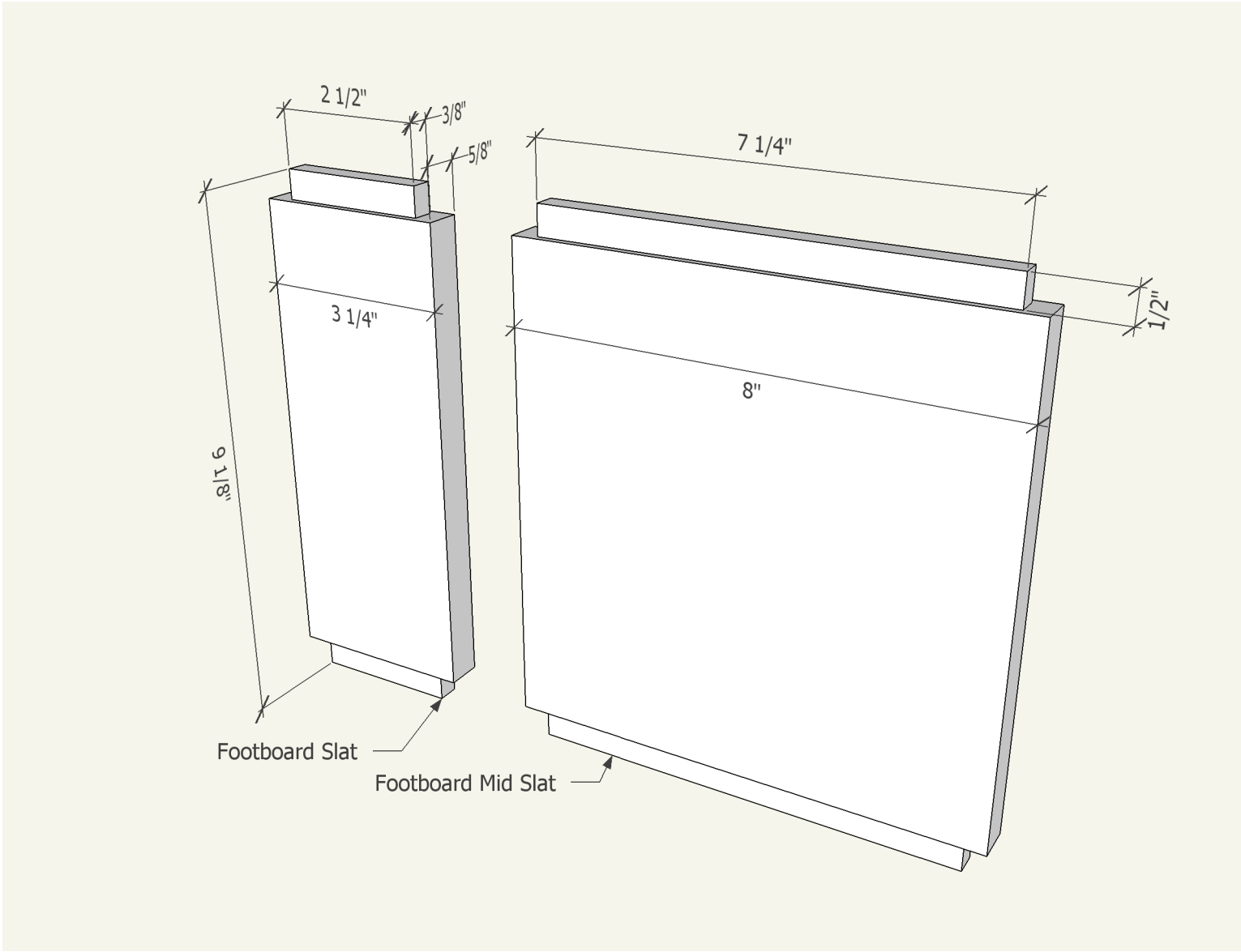

Killen•WOOD
Orinda, CA

Mission-Style Bed

Tim Killen | Sep 2009

Corbels

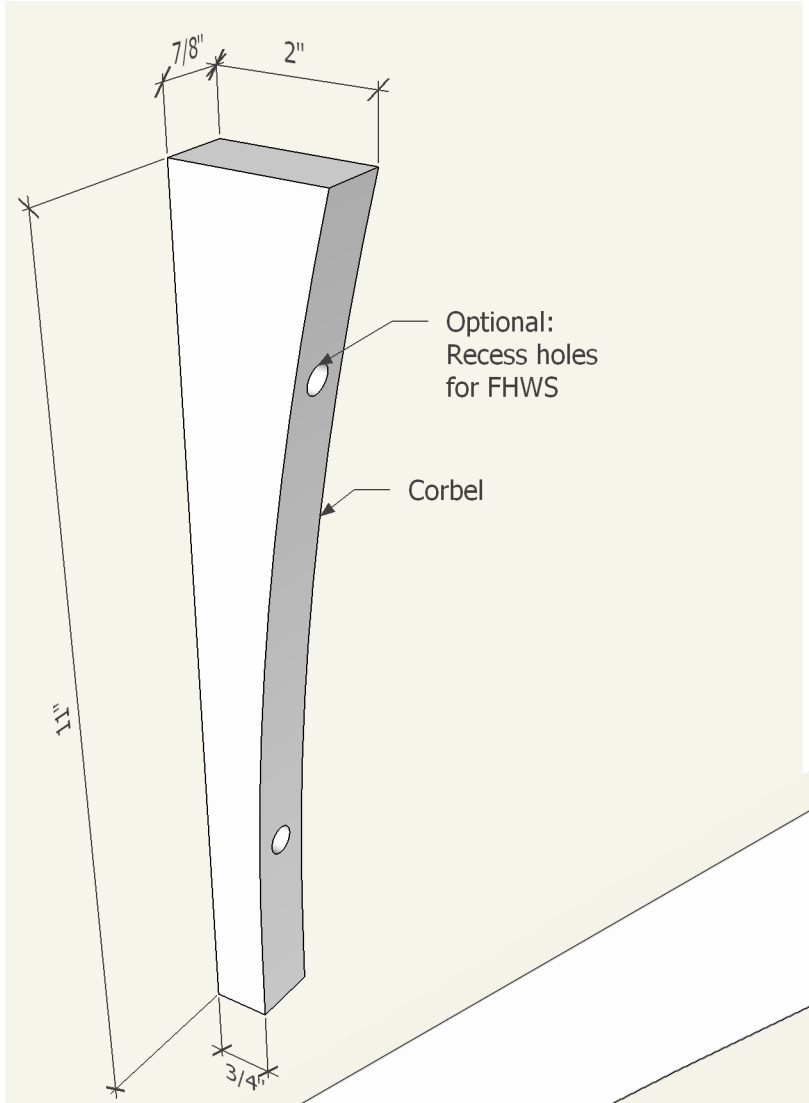

Full-scale Template

Killen•WOOD Orinda, CA	
Mission-Style Bed	
Tim Killen	Sep 2009

Cap and Bed Rail
Mattress Slats

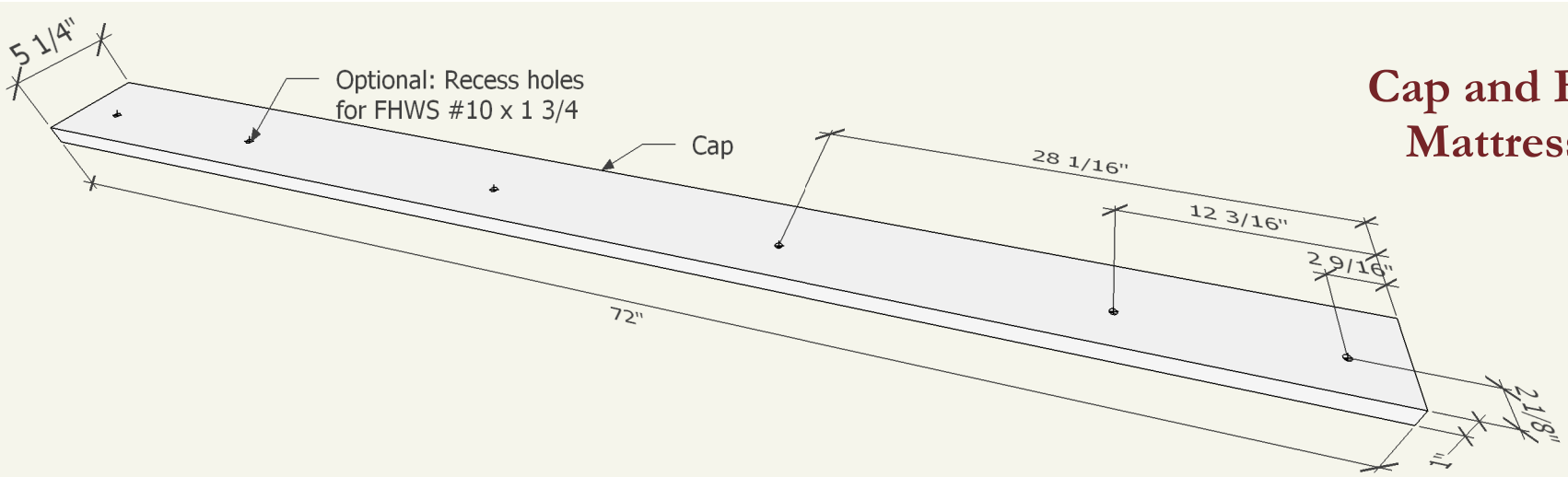

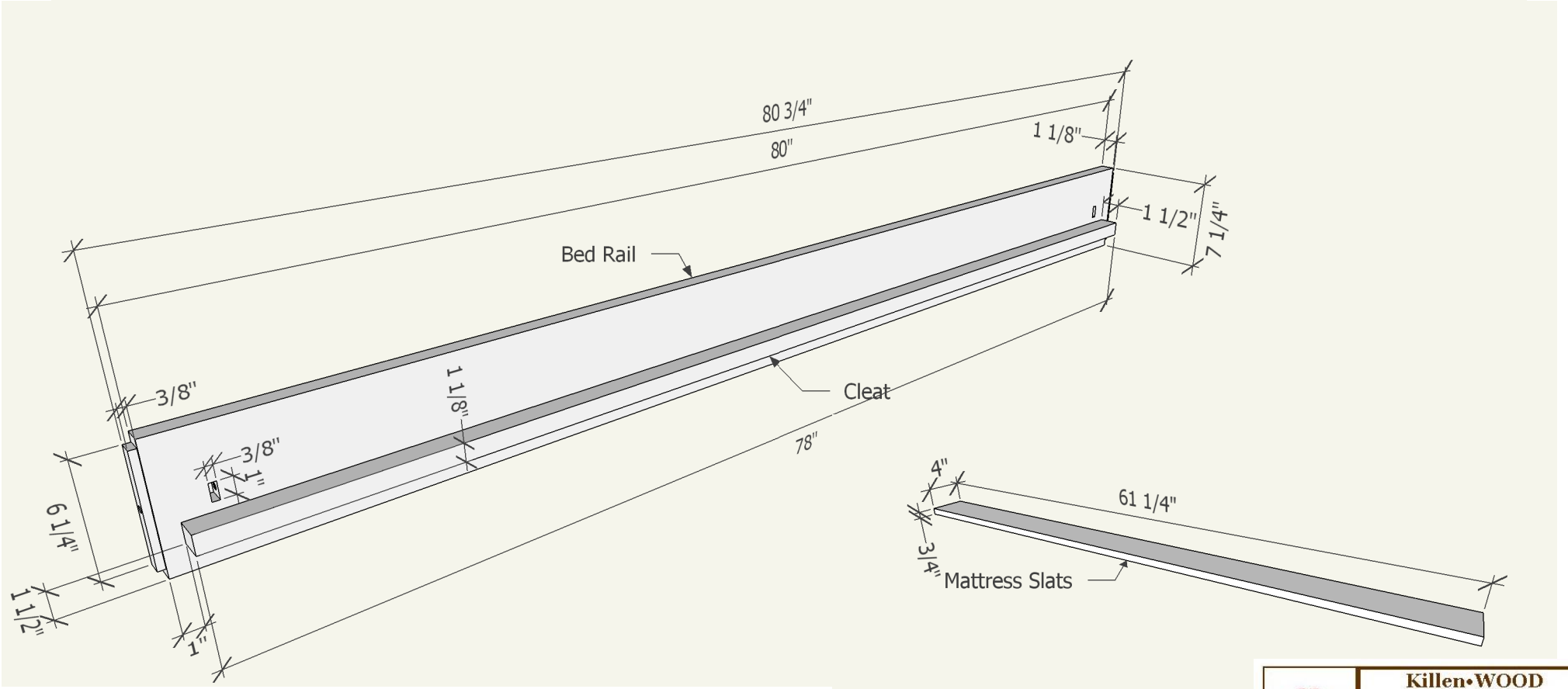

Killen•WOOD
Orinda, CA

Mission-Style Bed

Tim Killen | Sep 2009