Make Your Own Bandsaw Fence

BY PATRICK SULLIVAN

Smooth-sliding fence lets you rip and resaw with precision

The fence rides on an angle-iron rail in front and a threaded knob locks it in place (right). It also pivots to compensate for blade drift (below).

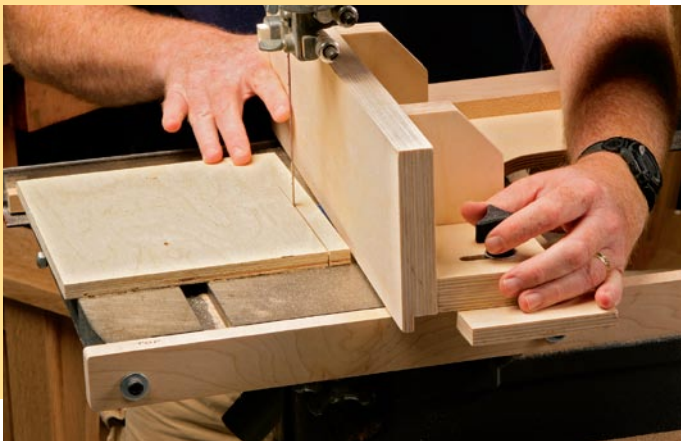

When I first bought my 14-in. Delta bandsaw, I figured it would be used only for curved work, like rough-cutting cabriole legs, so I didn't bother purchasing a fence for it. In my shop, the tablesaw was the workhorse that I depended on for almost everything, but especially for straight cuts.

That shortsighted decision has come back to haunt me, as I've gradually found many reasons for making straight cuts on the bandsaw, including resawing and stopped cuts such as inside corners. Without a good fence, I've had to improvise by clamping a piece of wood to the table. But clamping to the underside of the bandsaw table isn't easy because of the ribs down there, and setting the fence to make a straight cut requires loosening and resetting the clamps—sometimes it takes multiple tries.

Recently I ended all of that nonsense by building my own bandsaw fence. Although I'd seen various aftermarket fences around, they were expensive. And not all of them adjust easily for blade

Photos: Michael Pekovich; drawings: Christopher Mills

FABULOUS FENCE FROM SCRAP

This fence can be cobbled together with plywood, hardwood scraps, and inexpensive hardware. Note that the dimensions here are for a 14-in. Delta bandsaw. You may need to alter some of them slightly for your saw.

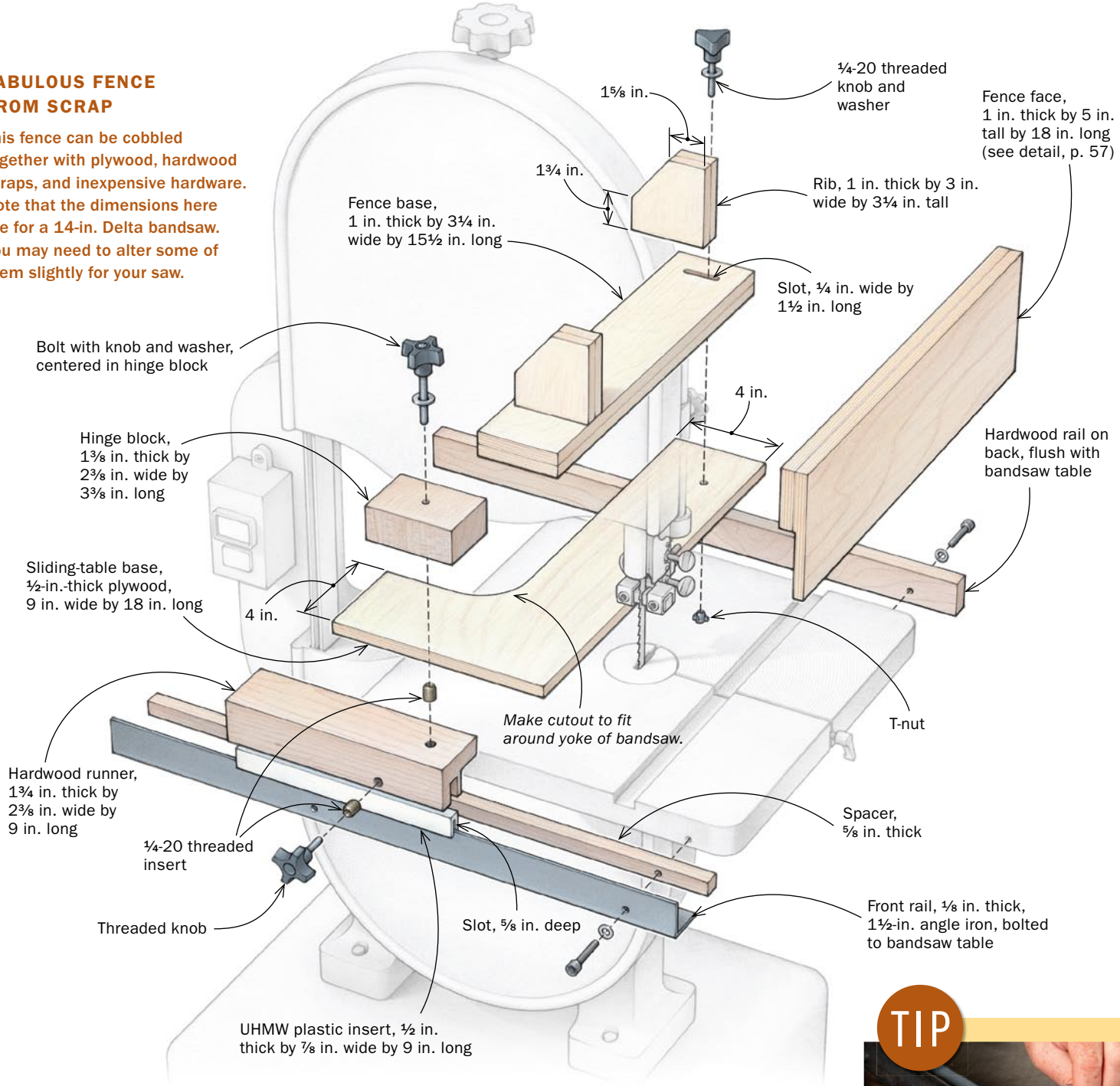

REAR VIEW

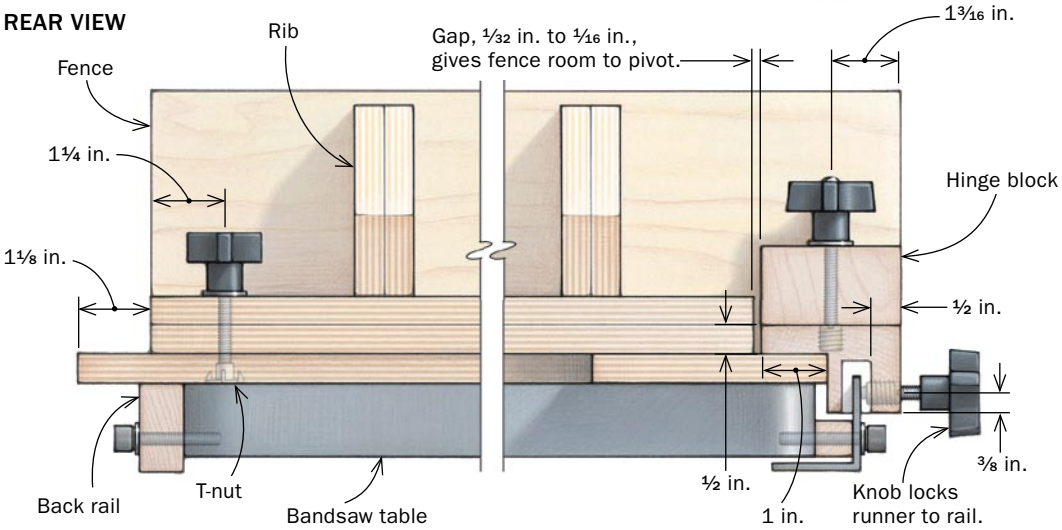

TIP

Railwork. *A hardwood spacer pushes the rail away from the front of the bandsaw table so the fence can ride on it. Drill the holes in the rail a bit oversize so you can adjust it flush with the table.*

A slot with no slop. *Glue the UHMW plastic insert into a groove in the runner (left). Once the glue dries, cut a slot into the plastic insert ⅝ in. deep (right). It should be wide enough that the runner slides smoothly on the angle-iron rail without play.*

Right-size rabbet. *The runner fits over the sliding-table base. For a rabbet that fits perfectly, scribe around the bandsaw table and the base.*

drift (most blades do not cut perfectly straight). This one is made out of scraps of hardwood and plywood, and requires very little hardware (all of which can be purchased at Amazon.com for less than $30). Despite these humble origins, the fence is rock-solid, smooth as silk, adjusts for drift, and offers up to 9 in. of rip capacity.

Note that this fence is sized for a 14-in. Delta saw. You'll have to adjust the dimensions and hardware locations to suit your own bandsaw.

Sliding table guides the assembly

The first task is to install a rail and spacer on the front of the bandsaw table. This rail guides the fence and provides all the stability for the jig. I added a hardwood rail to the back of the table that supports the fence beyond the bandsaw table, adding to the rip capacity.

The fence rides on a sliding table, which has two parts: a plywood base, and a hardwood runner that rides the angle-iron rail in front. The runner has an insert of ultra-high molecular weight (UHMW) plastic that's slotted to fit over the angle iron and makes the runner glide easily on the rail.

Glue the insert into the groove (I used Titebond III). After the glue dries, cut a ⅝-in.-deep slot into the plastic that fits over the angle iron. The slot must be cut perfectly; if it's too wide, the fence will wobble and lose accuracy. My ⅛-in. tablesaw blade cut a slot that was close but too tight. To creep up on the fit, I added paper shims between the runner and the tablesaw fence until the runner was riding on the rail smoothly with no play.

The fence pivots to adjust for blade drift. It is locked down via a threaded knob and a T-nut on the back end. Locate the T-nut so that it doesn't hit the back rail. Also, install the threaded insert for the locking knob in the front of the runner.

Make the fence as tall as possible

This fence is tall and thick, with ribs added behind the fence to keep it square and stiff. I laminated the 1-in.-thick parts from two

Insert threads. *The runner locks to the front rail with a threaded knob. Before assembling the sliding table, install the threaded insert for the knob.*

Attach runner to base. *After cutting the plywood base to size and shape, glue it to the runner.*

FENCE

FENCE ASSEMBLY

Recess for the block. *Rout the rabbet for the sliding-table base, then make way for the hinge block using a plunge router and fence (left). Glue the fence face to the fence base (above), using the ribs to keep the assembly square. Note that the fence is shown here on its side.*

FENCE FACE DETAIL

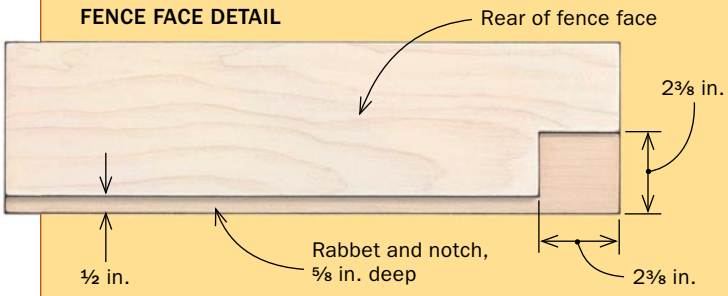

GETTING HINGED

Room to move. *To maximize the pivoting action of the fence, you need extra space at the front. Insert a ½-in. spacer between the fence face and runner (left), then drill the pivot-bolt hole in the hinge block at the drill press and glue it into its recess. Let the glue dry, then drill through the hinge block and into the runner (below) to create a pilot hole for the threaded insert that will hold the pivot bolt.*

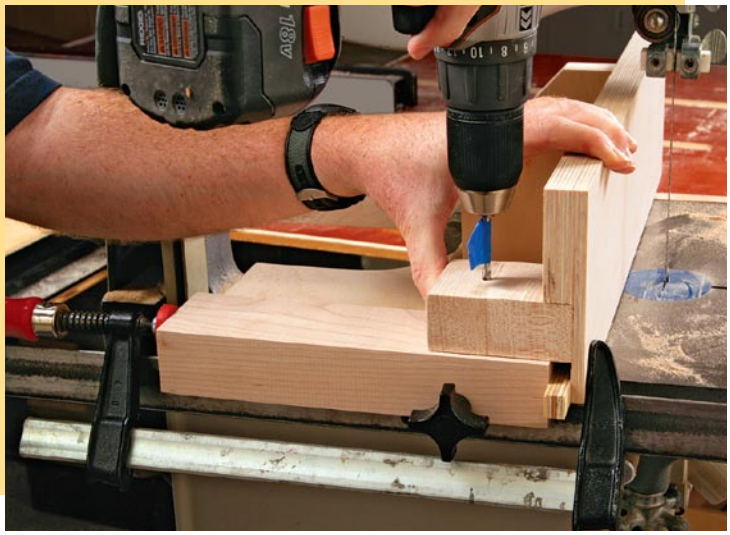

pieces of ½-in.-thick birch plywood. When you glue the fence base and fence face together and add the ribs, be sure the glue-up is perfectly square and the base is flush with the edge of the rabbet at the bottom of the fence face.

Put it all together and get ripping

Do the final assembly right on the saw table. Attach the sliding table and lock it in place on the rail. Now place the fence on the sliding table and install the threaded knob on the back. To maximize the pivoting action, the front of the fence needs to be spaced out from the end of the runner (see photos, right).

Dry-clamp the hinge block in place to mark the location of the hinge bolt. You want the hole for the bolt to be far enough away from the fence that you can get a hand drill in there. Remove the block and drill the hole in it at the drill press. Now glue the block into its recess and drill a pilot hole through the block and into the runner for the threaded insert that holds the hinge bolt. Enlarge the hole at the drill press and install the insert.

This fence will give solid service for decades. To use it, just make a test cut and adjust for drift as needed. □

Patrick Sullivan is a woodworker in Carmel Valley, Calif.