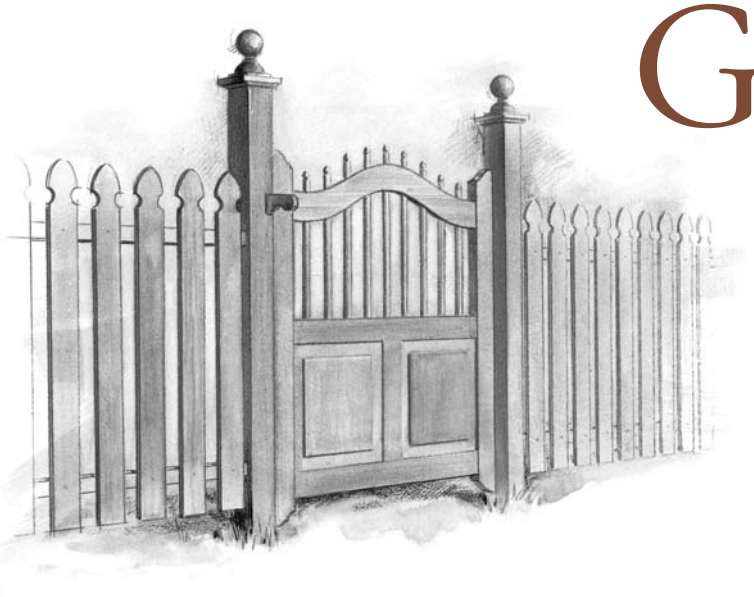

Garden Gate made of White Cedar

Jigs simplify construction of this elegant outdoor gateway

BY MARIO RODRIGUEZ

I like to think that a gate is the portal to a special place. In a garden or private outdoor spot, one often labors for months, lifting stones, turning soil, preparing beds and spreading fertilizer, all in the hopes that fruits and flowers will grow. A place like this deserves a special entrance. I wanted a gate that was sturdy but lightweight and not overbuilt. I also wanted it to be joined as a piece of fine furniture would be, not simply nailed together. I set out to create a traditional design that was graceful and inviting, something that would age well instead of becoming an eyesore in the years to come.

ROUTED SPINDLES

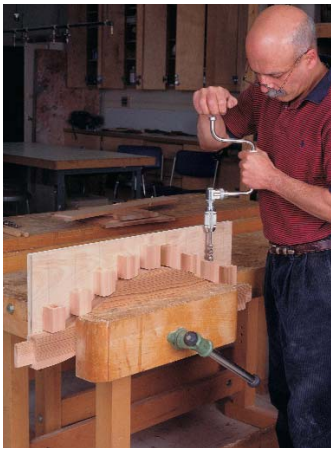

HAND-BORED RAIL

INSTALLATION

I designed this gate for a 36-in.-wide opening—large enough to accommodate a wheelbarrow yet narrow enough to give the garden area an intimate feel. I wanted to create the feeling of a private, almost hidden passage to a lush, little patch. At the same time, I didn't want a forbidding barrier. Toward this end, I designed the gate with a gently curving oxbow upper rail that suggests a rolling landscape.

The design of the gate draws on the very idea of a garden. The upper half is made up of delicate, round spindles ending in elegant finials, suggesting flowers. The curved oxbow rail joins the upper half of the gate and supports the ends of the spindles. I designed the bottom half of the gate with twin panels that are deeply set into grooves in the rails and stiles but are free to move within the frame. The frame is constructed with pegged mortise-and-tenon joints, which give it a clean and structured appearance, similar to a graceful English-style garden bench.

Photos, except where noted: Matthew Teague; drawing, this page: Tim Langenderfer

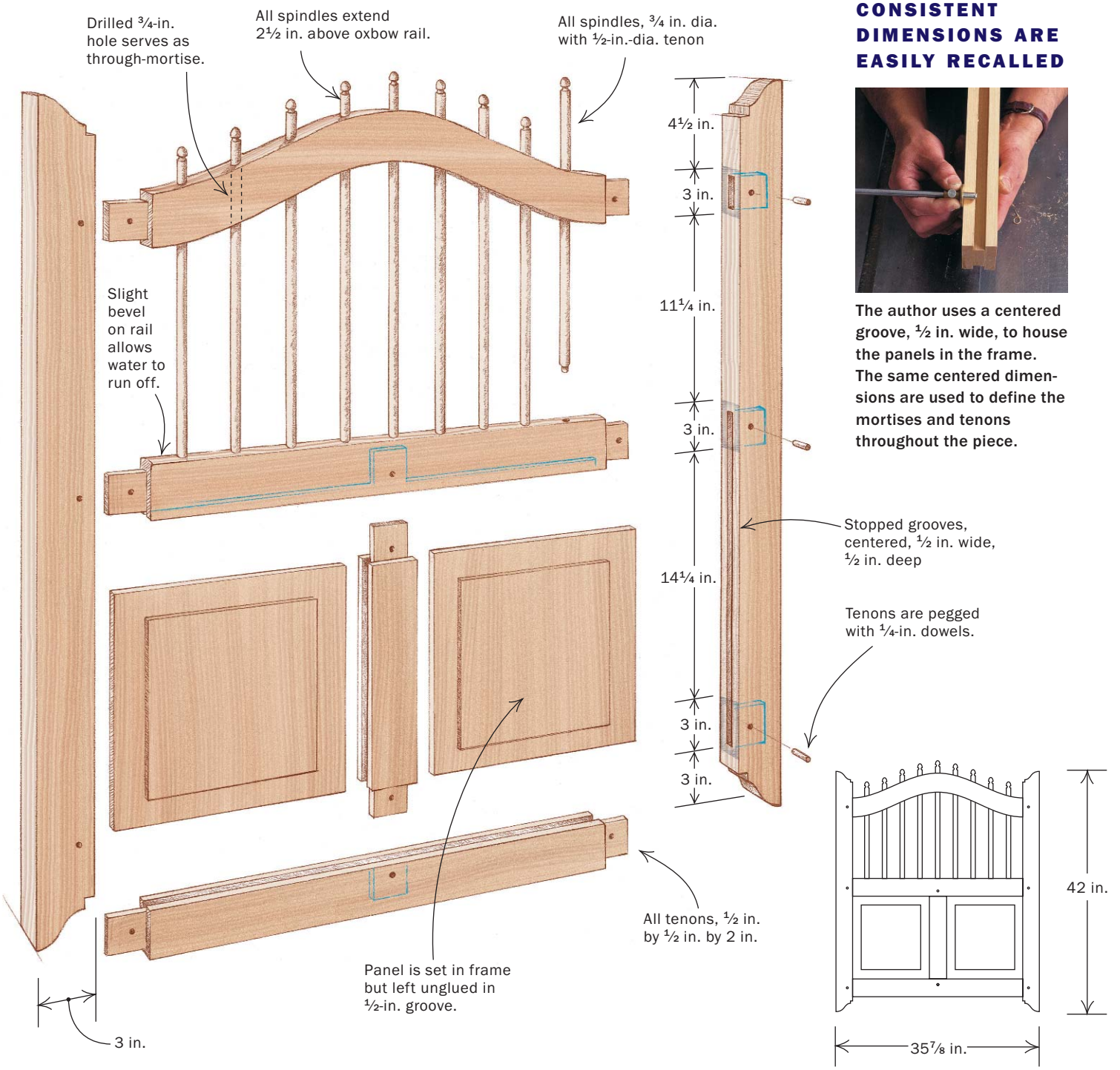

CONSISTENT DIMENSIONS ARE EASILY RECALLED

The author uses a centered groove, ½ in. wide, to house the panels in the frame. The same centered dimensions are used to define the mortises and tenons throughout the piece.

I don't believe in skimping on material. I chose 1½-in.-thick clear cedar, pulling boards from the lumberyard stock with nice, straight grain and even color. This prime material cost me a bundle, but it virtually guarantees a straight and clean project that will stand up beautifully over time.

Mill the rails and stiles

The construction of the gate is based on a ½-in. groove centered on the 1½-in. thickness of the stock. After ripping the straight stiles and rails to 3 in. and a wider 8-in. piece for the oxbow rail, cut them to length, remembering to add the length of the tenons to each piece. All of the rails and stiles are then grooved along their lengths to accept the solid panels on the bottom half of the gate.

Lay out carefully for the groove, using a marking gauge and scrap stock to make sure the groove falls dead center on the thickness of the stock. With the groove centered, the parts can be turned around during assembly so that you get the best appearance without having to worry about the position of the groove. Cut the groove in a single pass using a dado blade set for a cut that is ½ in. wide and ¾ in. deep.

Because the gate's panels are housed only on the bottom half of the stiles, be sure to stop the groove at the mortise for the center rail (see the top left photo on p. 70). Place tape on the tablesaw fence so that you know where the dado blade begins and ends. Lower the rail onto the blade,

Drawings, this page: Melanie Powell

Grooves in the stiles are stopped. *Use tape to mark the beginning, center and end of the cut. Lower the stock carefully onto the blade, cut the groove and lift the stock off the table.*

Cut the raised panels on the tablesaw. *A shallow shoulder is cut 2 in. from the edge of the panel. Blade marks are cleaned up with a shoulder plane and then sanded.*

mill the groove, then lift it off the blade where the center rail ends.

Cutting straight mortises is critical. If they're cut at an angle to the sides of the stile, the frame won't lie flat when assembled. Many woodworkers employ slot or hollow-chisel mortisers for this work. These machines cut straight, square mortises quickly. But on this project, because of the softness of the wood, you can simply rough out the mortises with a sharp ½-in. Forstner bit, use a ½-in. mortise chisel to square the ends, then clean up the walls with a 1½-in. bench chisel and a fine rasp. By working carefully and frequently checking your progress, you can execute the few required mortises easily enough. The previously milled groove, cut to a depth of ¾ in., is a great help in guiding your chisel as you clean up the mortises.

After cutting the mortises, prepare all of the rails (straight and oxbow) and the short medial stile for the tenons. It's easier to cut tenons on straight, square boards than it is to cut them on curved ones, so remember to cut the tenons on the oxbow rail before cutting the oxbow contour.

Cut the tenon shoulders on the tablesaw to a depth of ½ in. Use the miter gauge to ensure squareness of the shoulder and the fence to set the length of the tenon. Remember, it's safe to use the miter gauge and fence at the same time *only* when you're not cutting through the material. When the shoulders have been completed, cut the cheeks of the tenons on the bandsaw. I suggest cutting the tenons a little fat to ensure a snug fit even if your hand-cut mortises turn out a little wider than ½ in.

Make a solid raised panel

Because of the prominence of the panels, choose clean, straight-grained material. Glue it up to the required 14¾-in. width. When the panels are dry, remove the glue and fair the seams with a smooth plane set for a fine cut. Cut a shallow shoulder 2 in. from the edges of the panel. Then complete the raised panel by carefully standing the panel on edge and holding it tightly to the fence (see the bottom photo at left). Blade marks on the panels can be removed with a shoulder plane, then sanded.

Simple jigs help make custom spindles

I wanted spindles made of cedar, like the rest of the gate. I also wanted a decorative spear point on the end of each spindle. I thought it would be a nice touch if the spindles had a small ¼-in. reel, or neck, cut about ¾ in. from the end, then a rounded, tapered end with a blunt point.

I wasn't worried about executing a finial design on the end of a spindle. But I was concerned about turning a long, smooth spindle (23½ in.) to a uniform ¾ in. dia. without excessive whip snapping the spindle blank during turning. In the end, I designed a few jigs to help shape the spindles with a router table and a few common bits (see the photos and drawings at right).

Cut a dozen ¾-in. square blanks on the

Router bits

A router table and a few common bits are used to form the gate's spindles as well as the tenons and delicate finials.

BULLNOSE BIT

¾-in.-dia. bullnose (full radius) bit forms the dowel.

CORE-BOX BIT

¼-in. dia. core-box bit cuts the reel.

ROUNDOVER BIT

⅜-in. radius roundover bit shapes the finial.

STRAIGHT BIT

½-in. dia. straight bit cuts the tenon.

1. ROUTER-MADE DOWELS FROM SQUARE BLANKS

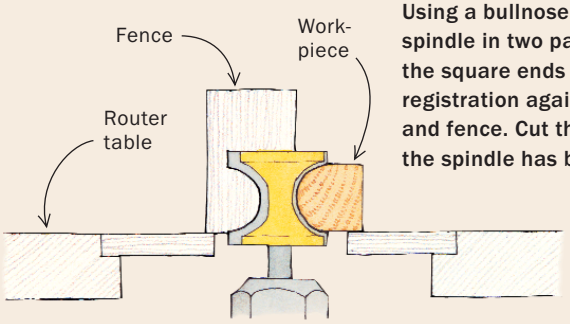

Using a bullnose bit, cut each spindle in two passes. Leave the square ends uncut for easy registration against the table and fence. Cut them away once the spindle has been formed.

2. TIGHT JIGS FOR CUTTING THE REEL

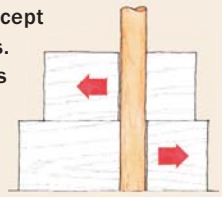

All spindle jigs are drilled to accept the spindles. The spindles fit tighter in the jigs if the jigs are cut apart and glued up with the hole slightly offset.

Slide the spindle into a ¾-in.-dia. hole in a block of wood and screw a wooden stop collar to the spindle to hold it at the correct depth. Slide the jig over a small core-box bit and then rotate the spindle 360° until the reel is cut evenly all the way around.

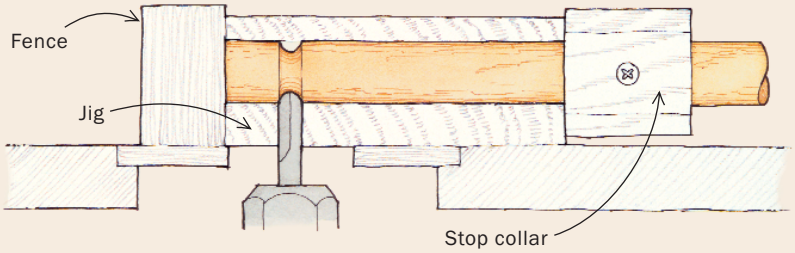

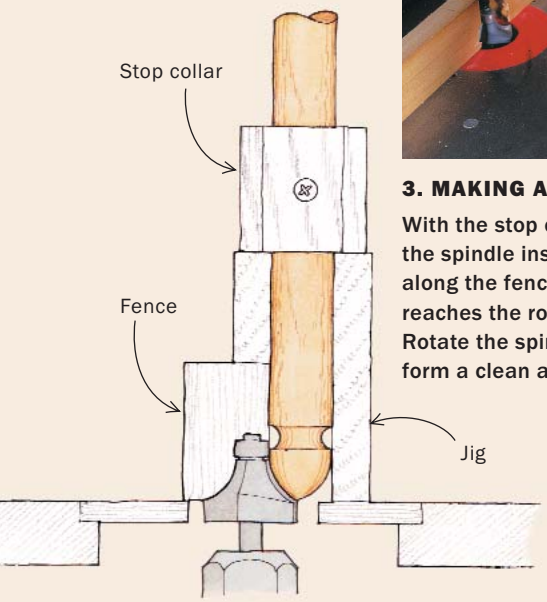

3. MAKING A POINT

With the stop collar in place and the spindle inserted, the jig rides along the fence until the spindle reaches the roundover bit. Rotate the spindle 360° again to form a clean and delicate finial.

4. ROUTING ROUND TENONS

Trim the spindle to length, then insert it into a jig and rotate it into a straight bit to form a perfectly round tenon.

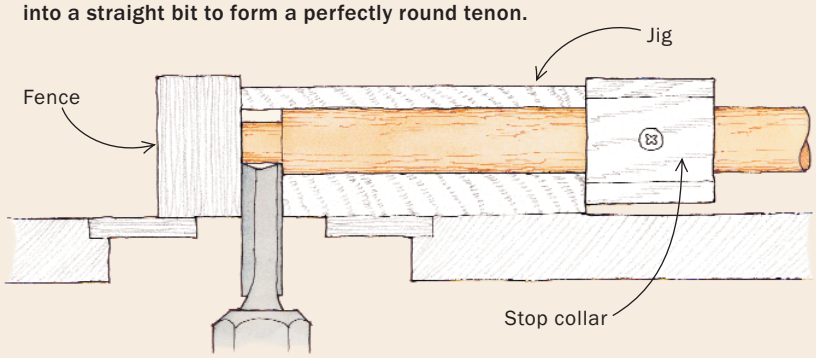

Drawings, this page: Jim Richey

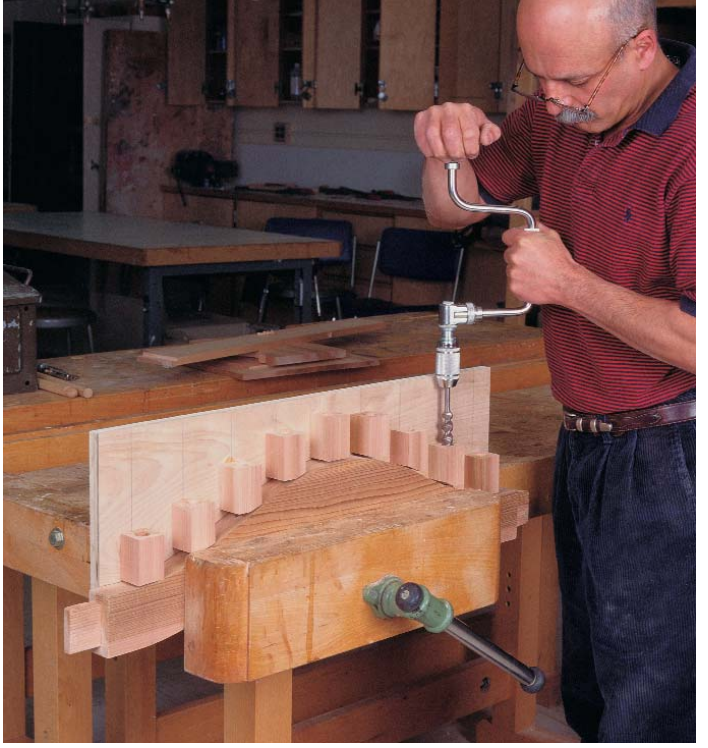

Straight holes in curved parts. *Line a piece of plywood with blocks to help drill round through-mortises in the oxbow rail. The author uses a brace and auger bit, but an extralong bit in a drill would work as well. To avoid tearout, leave the bottom of the rail unshaped until the mortises have been drilled.*

tablesaw to 26-in. lengths. The longest spindle is 23½ in., but leave extra material on the ends of the spindles to serve as reference blocks later. On a router table with a fence, load a ¾-in.-dia. bullnose (full radius) bit with a ½-in. shank (Woodworkers Warehouse #CT1318K). Shape one side of the blank to a half-round profile, then flip the blank 180° and repeat. Leave about 1 in. of square at each end so that you can reference the spindle against the fence and table. The process produces a near-perfect ¾-in.-dia. spindle. After shaping the spindle, cut off the square at each end.

Three simple jigs help cut the decorative finial on one end and the shouldered tenon on the other. After the spindle has been rounded to a dowel, insert it in a block of wood with a ¾-in.-dia. hole drilled through it. A wooden stop collar prevents the spindle from advancing further in the jig. With a small core-box bit (Eagle America #130-0402), move the jig into the spinning router bit, then rotate the spindle blank 360° until the reel is cut all the way through.

To round the end of the spindle, use a roundover bit (Eagle America #156-0602) with a vertically oriented jig. Then employ the same technique of rotating the spindle 360° to shape the end.

The last operation, tenoning, is performed similarly with a straight bit and a horizontally oriented jig. Before tenoning the spindles, cut them to length so that each one projects about 2½ in. above the curved rail in the assembled gate.

These simple jigs help produce spindles that require only minimal sanding. Make a few extra spindles, then select the best-looking ones for the project. Because of some variation in the exact thickness of each spindle and the softness of the cedar, there was some play when I inserted the spindles into the jigs. This sometimes resulted in a bumpy profile. To reduce the play and improve the quality of the profile, I ripped the jigs in two, then glued the parts back together, offsetting each slightly. This adjustment exerted just enough pressure on the spindles to eliminate any play and hold them snug in the jigs.

Drill and shape the oxbow rail

After cutting the tenons on the oxbow piece, mark the complete outline of the curved shape onto the oxbow rail, using a full-sized template prepared from the drawing. Transfer the exact position of each spindle onto the edge of the rail and onto the face. Then cut out only the top half of the oxbow rail on the bandsaw and leave the bottom half intact for now.

I made a jig for drilling the through-mortises in the oxbow rail. It consists of a series of 2-in.-long guide blocks, placed horizontally on the jig. The cedar was soft, and the project didn't require many holes, so I used a brace and auger. A drill with a long bit would work as well. Drill all of the holes before you cut the bottom of the oxbow contour on the bandsaw. Then transfer the position of the spindle holes from the oxbow rail to the medial rail and drill corresponding holes—½ in. dia. and ½ in. deep—to accept the spindle tenons.

Ready-made posts, finials and hinges

For the gateposts I used 4x4 clear cedar. I left 50 in. above ground and buried 24 in.

Glue-up is a snap. *As long as everything is cut square, the process should go smoothly.*

To mark these dimensions, I cut a shallow groove around each post as a quick guide when setting the posts into the ground. The finials for the gateposts can be either turned or purchased from a lumberyard. If you decide to purchase them, as I did, be sure they're clean (not nicked, chipped or torn), have no checks or cracks and have a crisp, pleasing shape. I also purchased the flat molded caps that fit over the post ends. Another option is to use copper caps, which are considerably more expensive but really give a gatepost a classy look.

There are several types of hinges that can be used on a gate, but for this gate I opted for pintle-and-eve hinges. Pintle-and-eve hinges are comprised of a spike or screw that is driven into the post. An upright projection on the spike engages the eye on the end of the hinge, which is attached to the gate. These hinges are available in endless variety. Because of an obvious absence of metal hardware on this gate, I've chosen the least obtrusive of these.

To ensure easy and true operation of the hinges, drill the post hinge holes with a drill guide to support and guide your drill at 90°. For the gate holes, use a doweling jig to make sure the holes line up.

Hang the gate, then bury the posts

I decided to prehang the gate on the posts because I didn't want to have any large gaps between them. Proper alignment is also critical to the smooth operation of the latch I designed (see the story at right). To position the parts properly and to ease installation, I devised a couple of plywood yokes that temporarily attach to the posts and hold them in place squarely. Once the gate went into the ground, it swung beautifully, and the latch worked like a clock—the gate opens smoothly and virtually closes itself. I applied a clear, penetrating, preservative finish and left the gate to take on a weathered patina in the seasons to come. □

Mario Rodriguez is a contributing editor to Fine Woodworking.

Yokes prehang the gate; a shopmade latch closes itself

I liked the idea of a wooden latch that would age and change color with the surrounding wood. But I wanted a latch that was easy to operate—something that would require only light pressure to open and then practically close itself.

I designed a double-ended lever that pivots inside a recess cut into the side of the gatepost. On the underside of the lever is a vertical slot that engages and holds a metal pin set into the edge of the gate. When the handle of the lever is depressed, it releases the pin on the other end of the latch so that the gate can be opened. Once passage through the gate is completed, a return spring attached to both the gate and the post returns the gate to its closed position. On its return trip, the gate pin contacts the lever and travels along the underside, raising the lever gradually until the pin reaches the vertical slot. Then the lever falls, locking the pin and the gate in place.

Plywood yokes help plant the gate. *With the gate prehung on the posts, the author uses plywood yokes to ensure that everything goes squarely into the ground.*

I planned to hang the gate so the bottom would be about 4 in. from the ground, and I chose to locate the lever near the oxbow rail. I laid out a ¾-in.-deep recess that would easily accommodate the lever and allow its upward travel. I roughed out the recess on a sliding-arm chopsaw with a depth stop, then cleaned it up with a 2-in. chisel and a shoulder plane. Through the lever, I drilled a ¾-in. countersink hole and a 3/16-in. screw hole.

I then mounted the lever into the recess with a #10, 1½-in. wood screw. To ensure easy movement of the lever, I placed one flat metal washer between the lever and the post and another in the bottom of the countersink hole. The lever must be secured to the post yet be able to travel up and down easily. All of this can be done before the posts and gate are planted in the ground. I waited until the gate and posts had been installed, then tested the lever and plugged the countersink hole.

It bugs me to see a gate leaning one way and the posts leaning another. To alleviate this worry and to make sure the latch would engage smoothly, I made two simple plywood yokes that hold the posts square and parallel to each other as they go into the ground. This way, I was guaranteed that everything would fall into place.

Once the posts were set into the ground and the gate was checked for easy operation, I marked the hole for the latch-lever pin to be drilled into the edge of the gate. This must be done with great care; if the pin is set out of square, too high or too low, it will not engage the lever properly, and nothing will operate as planned. I used a doweling jig to get an accurate hole the first time, but a drill guide block would have worked as well.

Photos, this page: Michael Pekovich