methods of work

EDITED AND DRAWN BY JIM RICHEY

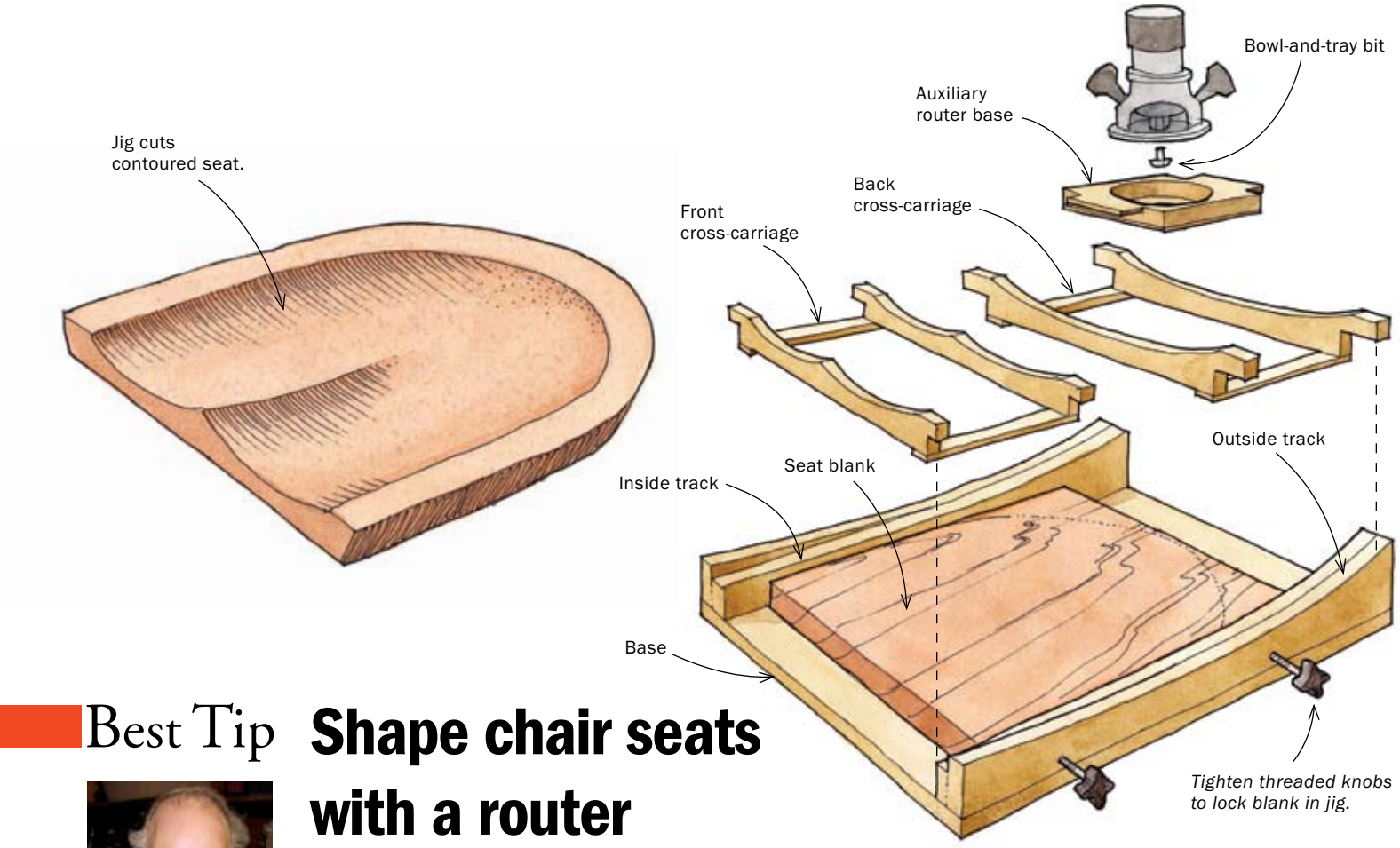

Best Tip

Shape chair seats with a router

After careers in education and real estate, Bill Garner returned full-time to woodworking, where he has concentrated on building and restoring period furniture. In a class on Windsor chair-making, he learned that making the seats by hand was labor-intensive. He built this jig to speed up the process.

The purpose of this fixture is to shape wooden chair seats so that they fit the body. The outside tracks of the base are higher at the ends and lower in the middle to match the desired profile of the chair seat. The outside tracks are used with the back cross-carriage to shape the seat's back. The inside tracks are used with the front cross-carriage to shape the pommel (front).

The back cross-carriage has a smooth concave shape and extended ears to ride on the outside tracks. The front cross-carriage has a double concave shape and shorter ears so that it rides on the inside tracks. The auxiliary router base rides on the cross-carriages.

To use the fixture, position the seat blank in the base and tighten with threaded knobs. Install a bowl-and-tray router bit (available from Amana; part No. 45986; www.amanatool.com) in your router and bolt the router to the auxiliary router base. Place the router in the back cross-carriage and adjust the depth so that the bit takes a light cut. Standing at the back of the chair seat, push the router forward to take a light cut. Step the router a small increment to one side and repeat the cut. Continue until you have scooped the entire seat at that depth. Now lower the bit about 1/16 in. and repeat the process. Keep repeating until the depth of the scooped area is 3/8 in. or more. Leave a flat area for spindle holes.

Now remove the back cross-carriage and replace it with the front cross-carriage. Repeat the process to shape the pommel at the front. While routing, it is a good idea to install a small C-clamp at the back end of a track to prevent pushing the cross-carriage off the end of the track and gouging the seat.

—BILL GARNER, Auburn, Wash.

A Reward for the Best Tip

Send your original tips to Methods of Work, *Fine Woodworking*, PO Box 5506, Newtown, CT 06470, or email fwmow@taunton.com. If published, we pay $50 for an unillustrated tip; $100 for an illustrated one. The author of the best tip gets a 12-in. combination square (with center head and protractor) from the L.S. Starrett Co.

Shopmade brackets support wide stock on edge

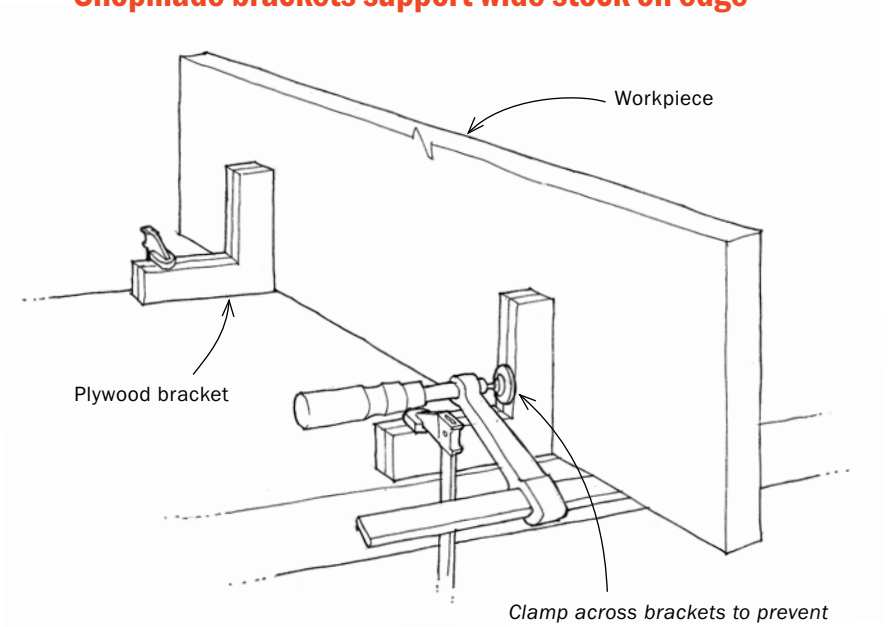

If you've ever tried to work on the edge of a wide door or tabletop, you know how difficult it is to secure a large, flat workpiece in the vertical position. I've found a solution in the form of some L-shaped brackets made from plywood.

To make the brackets, you need two pieces of plywood, each one measuring 8 in. wide by 16 in. long. Face-glue the two pieces, taking care to ensure that all four edges are perfectly flush. From this 1½-in.-thick lamination, lay out and cut four L shapes, making each one 2 in. wide by 8 in. long by 6 in. tall. It is imperative that all the corners be 90°.

The fixtures work in pairs. Clamp one leg of each fixture to your workbench as shown, then slip the workpiece between the pairs. For a snugger fit, loosen clamps as needed and push the fixtures closer together. To prevent the workpiece from shifting, add a clamp across the fixtures.

—MICHAEL SHEVELEV, Princeton, N.J.

Magnetic drill-press fence

Rather than build a complicated auxiliary drill-press table with an adjustable fence, a simpler solution is to use a 12-in.-long magnetic tool-holder as a fence. The magnets in the tool holder are powerful and will hold the device where you put it on your drill-press table. If the tool holder by itself is not tall enough, you easily can embed it into a block of wood.

—MICHAEL WILSON, Tuscaloosa, Ala.

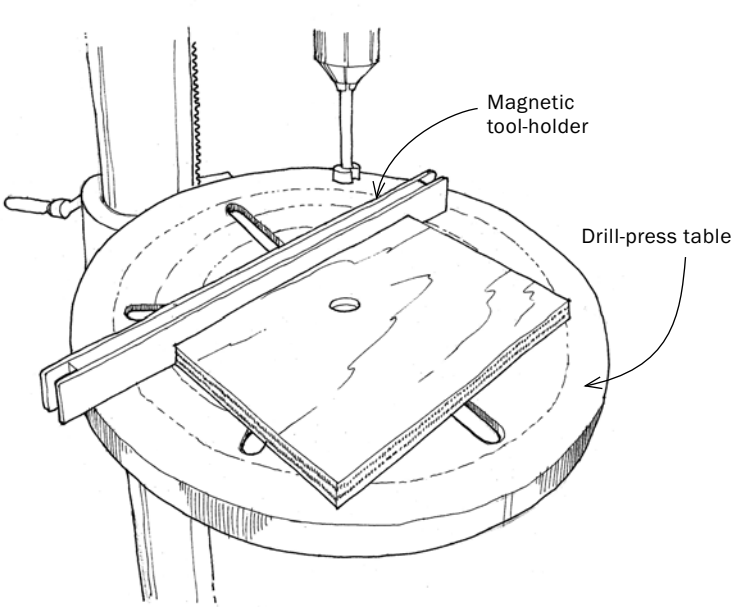

Quick Tip

I use a block of ski wax that I bought about 10 years ago to wax the sole of a bench plane. Ski-wax blocks are nicely rectangular, very hard, and last for ages. One swipe does it.

—NIALL DUXBURY, Harrogate, U.K.

A better glue dispenser

I like to buy bulk glue to save money. In the past I transferred the glue to a small dispenser for use, the kind with a chisel tip. Over time, however, the tips on these applicators clog up and don't seal very well. When I got tired of this, I came up with the idea of using a water bottle with a sports cap. These seal well, are just the right size, and produce a thin glueline. So next time you buy a case of water, get one with sports caps, and you'll have enough ready-made glue dispensers to last several years.

—PAUL CANARIS, Waco, Texas

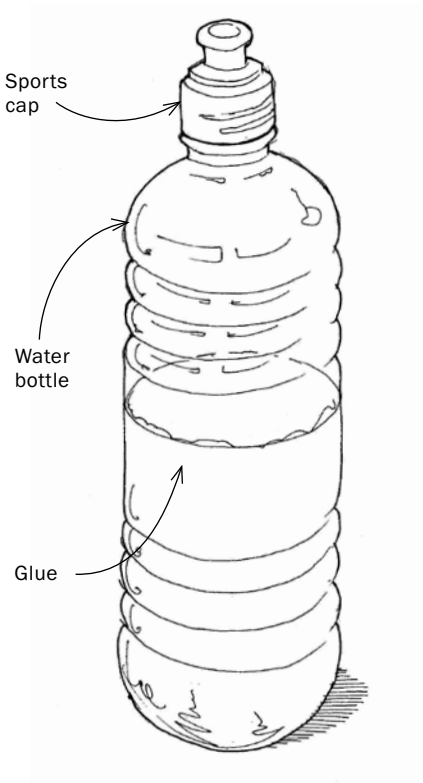

Make a giant cabinetmaker's square

In not much more than an hour, a carpenter's framing square can be converted to a jumbo-size cabinetmaker's square. For the fence of the square, I used ⅛-in.-thick by ¾-in. by ¾-in. aluminum angle stock, available at most hardware stores. Cut the angle stock into a pair of 16-in. lengths. Align the angle stock so that it's flush with the inside edge of the square, and clamp the three parts together. Drill holes for three Allen-head screws, then add the screws, lock-washers, and nuts.

—BOB WEY, Westford, Mass.

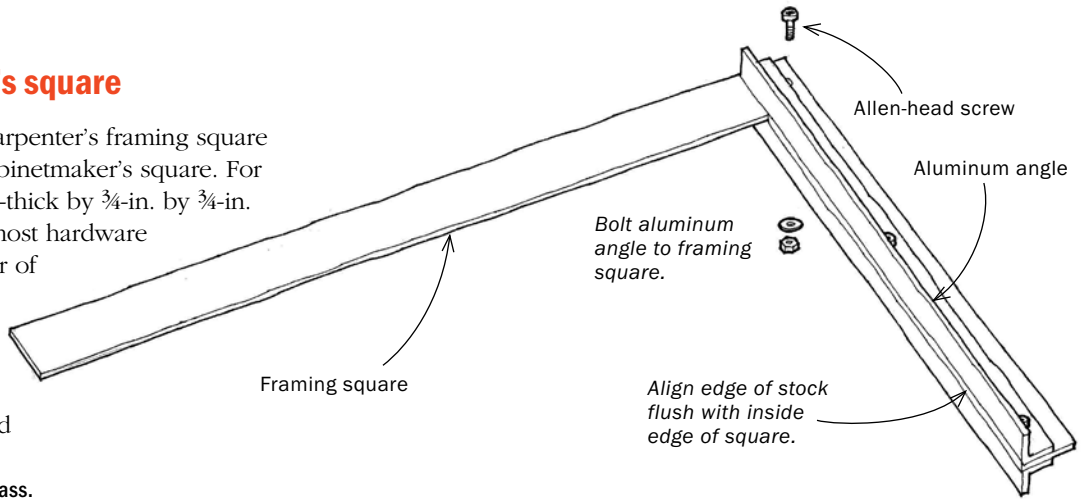

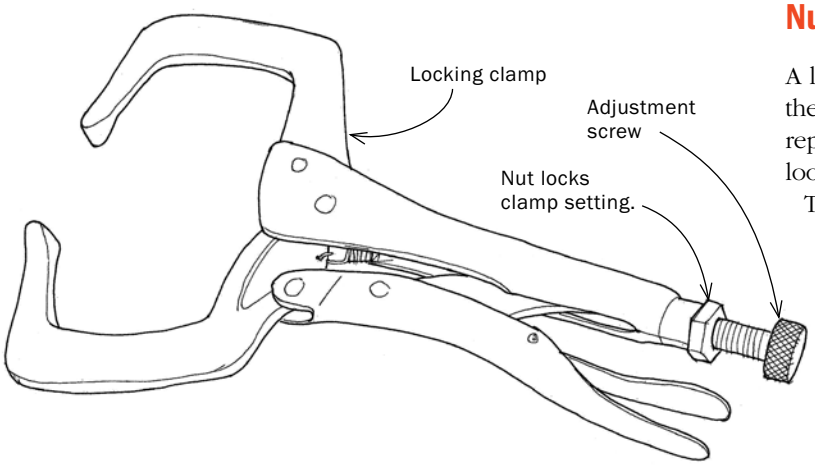

Nut holds setting on locking clamp

A locking clamp is one of my most useful tools. Unfortunately, the clamp setting tends to change when the tool is used repeatedly for the same task, because the adjustment screw loosens. So, I have to constantly readjust the screw.

To solve this problem, I threaded a 7/16-14 nut onto the adjustment screw to create a locknut. Now, once I establish the needed setting for the clamp, I tighten the locknut against the tool handle and everything stays put.

By the way, I cut the nut in half, making it 3/16 in. thick instead of ⅜ in. thick. The thinner nut allows for a greater range of clamp adjustment.

—ROBERT C. WALKER, Harbor Springs, Mich.

Table-leg finishing jig

Finishing some table legs recently, I discovered how difficult it can be to get a spotless, dripless finish on such parts. The project became a lot easier after I built this rack from scrap.

The rack is just two lengths of 2x4 stock screwed to a plywood base. Common nails serve as spindles. Allow about ½ in. of clearance on either side of each leg. Drill holes the same diameter as the nails in the 2x4s at appropriate intervals. Make some indentations in the top and bottom of each leg to act as bearing points for the nails.

In my leg design, I installed hanger bolts for attaching the legs. The hanger bolts also allowed me to freely spin the legs to reach all sides. If hanger bolts are not part of your design, affix a screw in some hidden area of each leg so that you can grip the leg without touching the finish.

—BARRY BORTNICK, Calgary, Alta., Canada