TAUNTON'S

Fine WoodWorking®

Shaker Wall Clock

A project plan for crafting an enduring classic that stands the test of time

Building a Shaker Wall Clock

Choose your movement first, then build the clock around it

BY CHRIS BECKSVOORT

Isaac Newton Youngs, a Shaker brother who lived in the Mount Lebanon, New York community, built only 14 of these clocks, yet they still stand out as a hallmark of Shaker style. Some clocks were built with a glass door below, and a few were made with glass set into the side panels. My favorite is housed in the Hancock, Mass. dwelling house and looks closer to the one I build. But you couldn't say that mine is an exact reproduction of the 1840 versions. Furniture reproduction is a slippery phrase. Though I'm known as a Shaker furniture maker, only twice in my career have I been asked to build historically accurate Shaker reproductions, meaning that all wood, hardware, dimensions, joinery techniques, tooling and finishes must match the original.

I have no qualms with historical accuracy, except when it comes to techniques that may have worked in the past but are not suitable today. Wood movement is one of those areas. The Shakers did not have to deal with forced hot-air heat. We do. Shaker clock makers built their cases to fit their mechanisms. We must build our cases to fit mechanisms that are commercially available today. To me, that seems perfectly aligned with Shaker ideals.

For starters, the original clock was constructed predominantly of white pine. I chose cherry for its color, hardness and grain. Because cherry moves more than white pine does, I had to make a few dimensional adjustments to allow for wood movement of the

Quick clamps for temporary strength. *The false top and false bottom are simply butt-joined and glued to the sides. The actual top and bottom will reinforce this joint. Before the glue sets, check to make sure the case is level and square.*

Long-grain plugs are hardly seen. *The top is screwed straight into the sides, then plugged and trimmed flush.*

Allow the back to move. *The back is screwed only near the center. The edges are then nailed into place, allowing for seasonal movement.*

Build the case

back panel. Second, I decided to use a top-of-the-line mechanical movement, which required a small amount of additional interior space. Consequently, my overall case is a little deeper, and the back is a bit thinner. So much for historical accuracy.

The construction of both the original and my version is as simple as the spare design. I will offer several options—in construction techniques, dimensional changes and types of mechanisms—to suit the type of clock you want to build. Accurate dimensions for the original clocks (the glass door, not the panel-door version) can be found in John Kassay's *The Book of Shaker Furniture* (University of Massachusetts Press, 1980) or (for the clock with glass panels in the sides) in Enjer Handberg's *Shaker Furniture and Woodenware* (Berkshire Traveller Press, 1991). The version I built appears in my book, *The Shaker Legacy* (The Taunton Press, 1998).

Make the case to fit the clock parts

I never start construction on a clock until I have the movement, dial and hands. Having these at the ready makes it much easier to fit the dial and allow proper clearance between the shaft, the hands and the glass, as well as the clock movement and the case back. I hate surprises.

Once you have the clock parts, you can cut the sides of the case to size. Then cut ⅜-in. by ½-in. rabbets to accept the back. The front of each side receives a stopped rabbet to accept the face. You could simply make the clock an inch wider and avoid cutting rabbets in the front, but—for reasons more aesthetic than historical—I prefer to keep proportions closer to the original.

Next, cut the top and bottom pieces and mold them with a quarter-round router bit. The back of the top is notched out ½ in. by 4½ in. to allow for the hanger on the back of the case.

On the original, the top and bottom were merely nailed onto the sides. I use long, thin screws and plugs. Another alternative is dowels. I once had a student who attempted to use sliding dovetails, only to discover that they lasted from 12 until noon. With only 9/16 in. of overhang on the sides and part of that cut away by the rabbet, the remaining end grain is extremely fragile.

I prefer to use a false bottom and top, which not only make glue-up easier but also act as a doorstop in front and create rabbets to house the back. Glue the false top and bottom to the sides using butt joints. Once the glue dries, center the actual top and bottom on the case and screw them into the sides.

The clock back simply butts up against the false top and bottom and is screwed into place from behind. However, this is where wood movement comes into play. The back is about 9½ in. wide, which means that a piece of flatsawn cherry will move about 5/32 in. (from 6% moisture content in winter to 13% moisture content in summer). If you can locate or glue up a quartersawn back, the amount of movement is cut in half, to 5/64 in. So, if you're building in the summer, when the back has reached a moisture content of near 12% or 13%, the back can be fitted tightly. In the winter, when the moisture content of the back is closer to 6%, a gap of just under 3/64 in. is required on each side. Also, leave a small gap where the half-round hanger protrudes through the top.

Another change I make is to increase the size of the hanger hole,

Photos: Erika Marks

A SHAKER WALL CLOCK

This adaptation of an 1840 Shaker clock features simple case construction and straightforward door joinery. A hand-painted face is a handsome touch, and a quality movement will keep the clock running smoothly for years to come.

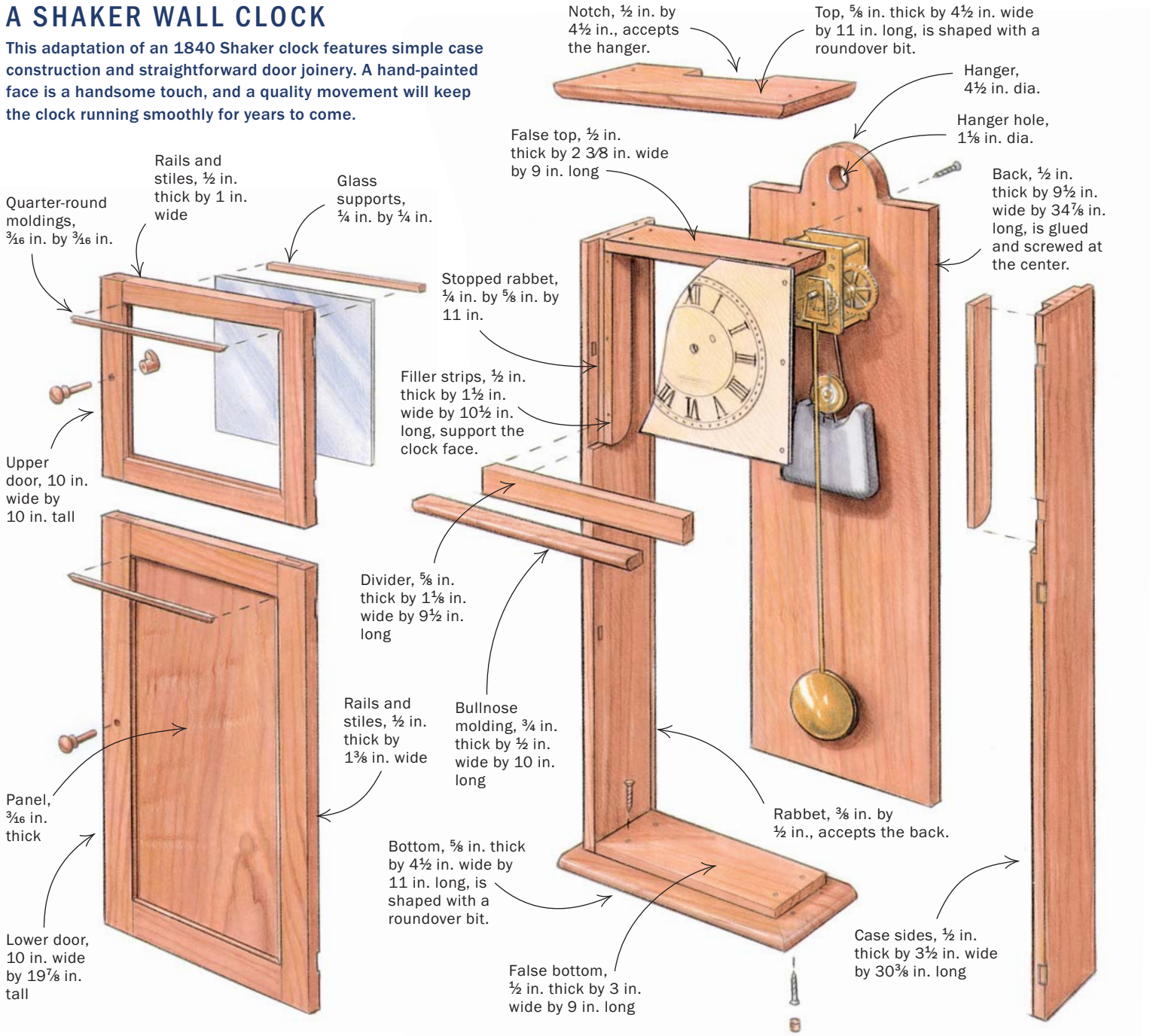

DOOR-JOINERY DETAILS

UPPER DOOR

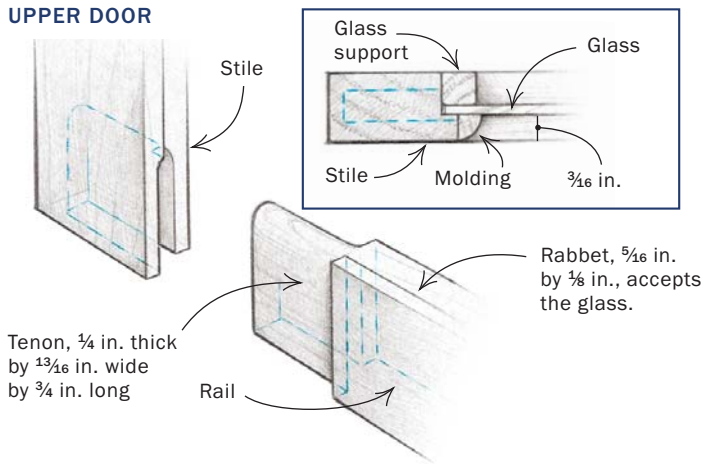

LOWER DOOR

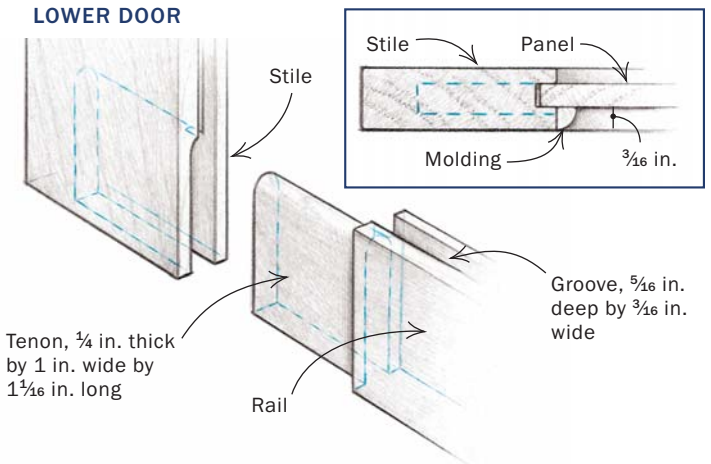

Drawings: Bob La Pointe

Horizontal divider catches the doors. *The horizontal divider is sized to act as a doorstop for both doors. It is set into the stopped rabbet that holds the clock face.*

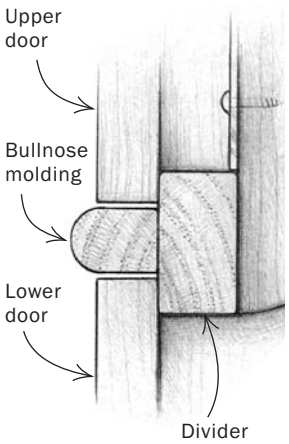

Bullnose molding separates top and bottom doors. *Shape the profile using a roundover bit, then cut it to fit flush with the sides.*

Fit the door divider

from ½ in. to 1⅛ in., to allow the clock to be hung on a Shaker peg. The back is merely nailed into place, with a dab of glue in the center to ensure that wood movement is equal in both directions.

Next, let in the two-piece molded divider between the top and bottom doors. A horizontal divider, which also acts as a doorstop, is set into the rabbet flush with the face, and then a bullnose molding is glued over it.

At this point it pays to plan ahead. Measure the depth of the movement to check that you have proper clearance for both the shaft and the glass of the door. Mechanical movements are either attached directly to the back—as I've done—or sit on a shelf. Quartz movements, being much shallower, are usually attached to the dial. If you use a spacer, the movement can also be attached to the case back. Planning ahead allows you to position the dial so that the hand shaft is close to the glass but does not touch it. Once you've established the location of the dial, glue two vertical filler strips to the inside of the case. Thick metal dials like the one I used can be screwed to these strips directly, while thin metal or paper dials should be adhered to ¼-in.-thick plywood backings.

Simple joinery for the doors

The doors are relatively straightforward, mortised and tenoned at each corner. Cut haunched mortise-and-tenon joints on center, and make sure to offset the glass and panel grooves to allow room for the thumbnail profile along the fronts. The frames are ½ in. thick, and the bottom panel is only 3⁄16 in. thick. The 3⁄16-in. quarter-round moldings are added after the panel is in place. On the top door, add the quarter-round moldings to hold the glass on the outside, and add 3⁄16-in. glass supports, nailed from the inside, to hold the back of the glass.

From looking at the original, I can't tell how the doors are kept

A movement for every price range

By far the least expensive movement is the battery-powered quartz movement. It is also the most accurate and the least fussy and bothersome. Change the battery once a year, and that's it. These movements are also the smallest and easiest to mount. The cost is anywhere from $5 to $30, and you can get a pendulum to boot. Sounds perfect, doesn't it?

The fact is, I can spot their fake pendulums a mile away. They have a weird little groan and oscillate too slowly. Still, if money is a concern, they're worth considering. Quartz movements are available in craft catalogs and also from Woodcraft Supply (800-225-1153; www.woodcraft.com), Murray Clock Craft (800-268-3181; www.murrayclock.com) and Merritt's Clock Supply (800-345-4101; www.merritts.com).

In my opinion, mechanical movements are much more in keeping with period clocks. Most require a little extra work to install and to get the pendulum adjusted to the correct time. Plus, they need to be wound every week. Most are face-mounted, which requires the face to be backed by ¼-in.-thick plywood. The lower-end mechanical movements run from about $35.

The price for a spring-driven, time-only (silent) movement is about $40 ($110 for a unit with a 20-in. pendulum). You can also spend more and get chimes or a bell strike. The downside to these movements is that they have a life expectancy of roughly five years if oiled yearly. The brass plates are thin and soft, and after a few years of use, will wear out. They can be repaired but will require the services of a clock maker to install bushings.

Inexpensive mechanical movements can be ordered from the same suppliers listed previously.

I am quite fussy, and I would not expect my customers to pur-

Don't risk surprises. *Before applying glue, carefully dry-fit the doors and see that they fit the case.*

Construct the doors

Quarter-round molding trims out the door. *The molding is shaped on the router, then mitered to fit the door. Becksvoort simply glues the molding to the rails and the stiles.*

Securing the glass. *After setting the glass into the rabbet, small glass supports are nailed into place.*

closed. Nor does Kassay give any clue. When in doubt, I take historical liberties, using something that is period appropriate and might have been used. I usually turn my knobs with extended shafts and attach a small oval spinner (*FWW* #155, pp. 46-47). I chisel out a small mortise for the spinner on the inside of both the upper and lower cases. This method is unobtrusive, and it works.

As far as I know, nobody makes hands to match the originals. When in doubt, select the simplest design possible, such as moon or spade hands. If you are handy with sheet metal, you can cut your own. If you decide to get the expensive mechanical movement, you can have custom hands made to specifications.

As far as a finish goes, I am partial to Tried & True Varnish Oil (*FWW* #152, pp. 74-75). It leaves a silky, penetrating finish that I prefer. More accurate for this clock would be a shellac finish, which was used on the original.

When hanging the clock from a peg board, carve a ½-in. flat spot at the top of the peg where it meets the hanger, leaving a slight ridge, to keep the clock from sliding forward on the peg. If the peg board is ¾ in. thick, use a ¾-in. spacer behind and near the bottom of the clock. A toggle bolt or similar anchor will attach the spacer to drywall or plaster if there is no stud nearby. Once the clock is perfectly plumb and running smoothly, drill a hole through the back into the spacer and anchor the clock with a screw. This keeps it from shifting during winding or an accidental bump. □

Chris Becksvoort is a contributing editor.

chase a high-priced clock that took 40 hours to make, only to have to replace bushings after two years. A quality case demands a quality movement. I wanted a time-only, weight-driven movement made of thick, hardened brass plates. To me, this high-quality movement comes closest to what the original Shaker movements must have been like. I don't mind the extra time it takes to install the movement or the extra time required to adjust the pendulum to get it to keep perfect time. The weekly winding with the crank key becomes a Sunday night ritual.

Individually made wall-clock movements are available for $300. Add another $50 for custom-cut hands, and $25 for unpainted, heavy steel dial blanks direct from David Lindow, clock maker (527 Gravity Road, Lake Ariel, PA 18436; 570-937-3301).

Custom dials and dial painting are available from The Dial House (3971 Buchanan Hwy., Dallas, GA 30132; 770-943-5370).

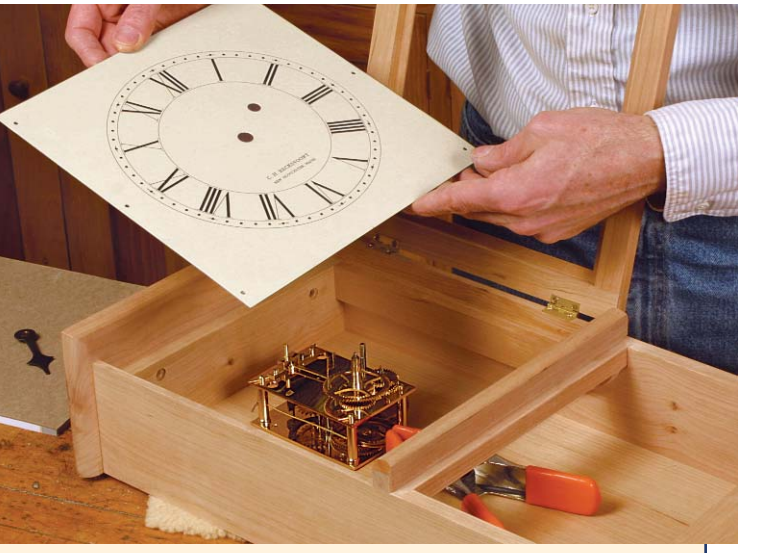

Align the movement with the face. *With the movement roughly centered inside the clock, lay the face in place and make adjustments until the hands are properly centered. Use an awl to make screw holes through the movement.*